BALLUFF

PRODUCTS FOR EFFICIENT AUTOMATION

Products and Services

innovating automation

Connectivity, Accessories 5

Innovative solutions

TO MEET YOUR AUTOMATION NEEDS

Plastics, Rubber and Tires
Mobility
Packaging, Foods and Beverages
Energy Generation

INNOVATIVE SOLUTIONS FOR ANY REQUIREMENT

To give you an overview of our range of offerings we have condensed our product portfolio into five volumes. This overview provides a list of topics contained in each volume.

1 2

Sensors 1
- Inductive Sensors
- Capacitive Sensors
- Photoelectric Sensors
- Magnetic Sensors
- Mechanical Cam Switches

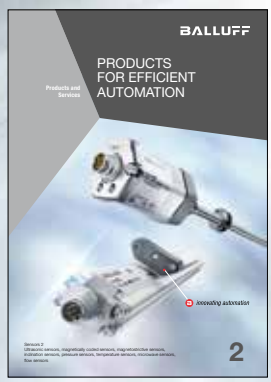

Sensors 2
- Ultrasonic Sensors
- Magnetically Coded Sensors
- Magnetostrictive Sensors
- Inclination Sensors
- Pressure Sensors
- Temperature Sensors
- Flow Sensors
- Condition Monitoring Sensors

3 — 4 — **5**

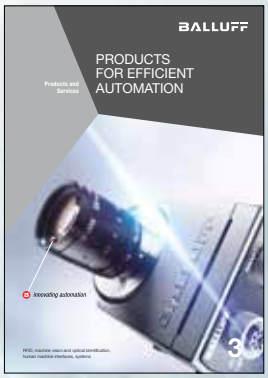

- RFID
- Machine Vision and Optical Identification
- Human Machine Interfaces

- Safety
- Industrial Networking
- Software and System Solutions
- Power Supplies

- Connectivity
- Accessories

Do you need more details? Our Product Finder at www.balluff.com provides you with product-specific information, including technical drawings, data sheets, user guides and more for each individual product. All items are available for download.

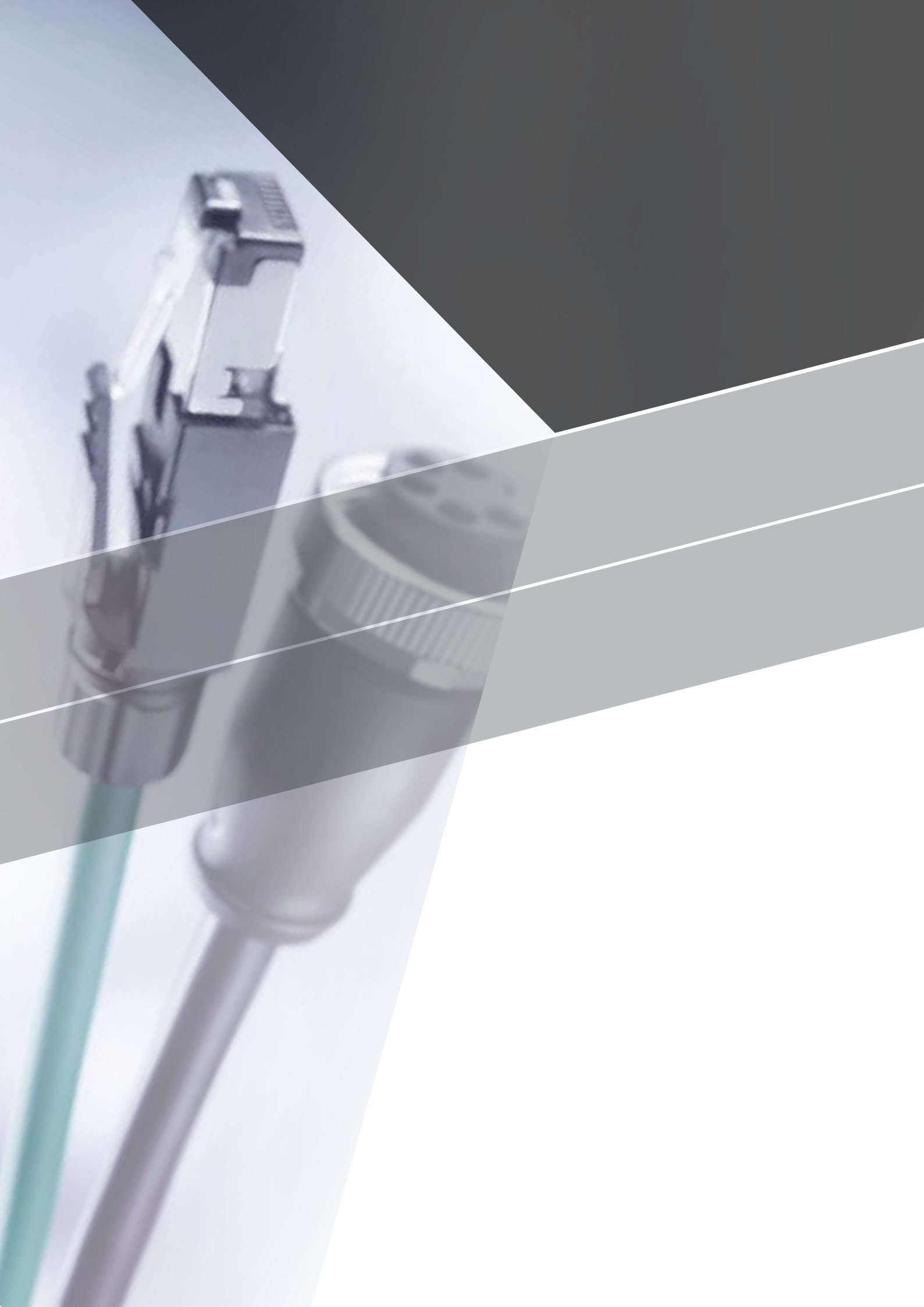

CONTENTS

8 CONNECTIVITY

12 Single-Ended Cordsets, Double-Ended Cordsets, Bulk Cables
182 Y-Splitters
190 Tees
198 Field Attachables
254 Bulkheads
260 Receptacles
284 Adapters
290 Terminating Resistors
296 Junction Blocks

326 ACCESSORIES

330 Reflectors, Fibers, Optics
382 Mechanical Protection
428 Fastening Technology
540 Mechanical Accessories
560 Lighting for Vision Systems and Machines
602 Signal Converters and Communication Adapters

ALPHANUMERIC INDEX 628

GLOBAL PROJECT MANAGEMENT 652

ABOUT BALLUFF 654

Standardized and tailor-made connection components

CONNECTIVITY.

innovating automation

At Balluff, you get everything from a single source, including a comprehensive range of connectivity components for every area of automation from a variety of materials, for various requirements and applications.
Connectors and double-ended cordsets from Balluff are available for high temperatures up to 180 °C and for low temperatures down to –40 °C. Designs with Ecolab approval or in IP69K are especially suitable for sensitive fields such as the food industry. All products are suited for rugged use in the industrial environment. Common to all are simple installation and rapid integration for fast startup.

Your Balluff solutions

- Sensor Cables (single-ended cordsets, double-ended cordsets, bulk cables)
- Y-Splitters
- Tees
- Field attachables
- Bulkhead Connectors
- Receptacles
- Adapters
- Terminating Resistors
- Passive Interfaces

CONNECTIVITY

12
SINGLE-ENDED CORDSETS
DOUBLE-ENDED CORDSETS
BULK CABLES

14 Sensor Cables
46 HDC Cables
70 Power Cables
90 Valve Connectors
98 Bus Cables
110 M23
112 Single-Ended Cordsets
120 Double-Ended Cordsets

182
Y-SPLITTERS

184 M12 male/M8 female/M8 female;
M12 male/M12 female/M12 female
186 M12 male/DIN A, 18 mm/DIN A, 18 mm;
DIN A, 18 mm/DIN A, 18 mm/M12 male

190
TEES

198
FIELD ATTACHABLES

254
BULKHEADS

260
RECEPTACLES

284
ADAPTERS

290
TERMINATING RESISTORS

296
JUNCTION BLOCKS

298 M8, 3-pin, 4-pin, cable connection
300 M8, 3-pin, 4-pin, plug connection
302 M8, 3-pin, plug connection
304 M12, 3-pin + PE, 4-pin + PE, cable connection
306 M12, 3-pin + PE, 4-pin + PE, plug connection
307 M12, 3-pin with PE, 4-pin with PE, hood connection

322
BASICS AND GLOSSARY

**Large selection,
flexible use**

SINGLE-ENDED CORDSETS

DOUBLE-ENDED CORDSETS

BULK CABLES

In our comprehensive product range of single- and double-ended cordsets for every industry, you are guaranteed to find the right connection for your application. Signals, data and power are always reliably transmitted. We also offer various cable types and connectors for great flexibility in making your selection.
Also available are bulk cables in the same proven quality as our assembled cables in various materials with various cross-sections. These can be trimmed to length. This makes their use highly flexible.

The most important benefits

- Large selection for every industry
- Various cable types, various plug connectors
- Robust and industrial grade
- Reliably transmit signals, data and power

		BCC M313 ...
Connection		M8 female, A-coded
Version		straight
Rated voltage	No LED	60 V AC/DC
	with LED	30 V DC
Rated current		4 A
Degree of protection	unshielded	IP67, IP69K
	shielded	IP67
unshielded, no LED		BCC M313-0000-10-001-_ _ _ _ _ _①-_ _ _②
unshielded, 2 × PNP-LED		BCC M313-0000-10-004-_ _ _ _ _ _①-_ _ _②
unshielded, 2 × NPN-LED		–
shielded, no LED		BCC M313-0000-10-036-_ _ _ _ _ _①-_ _ _②
Approval/Conformity		CE, UL, EAC
For drawing see page		148

M8 female

PIN 1: brown
PIN 3: blue
PIN 4: black

M8 male

PIN 1: brown
PIN 3: blue
PIN 4: black

unshielded, no LED

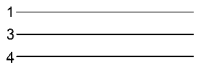

unshielded, no LED

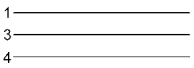

unshielded, 2 × PNP-LED*

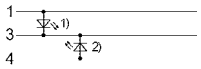

unshielded, 2 × NPN-LED*

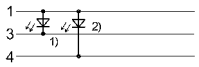

shielded, no LED

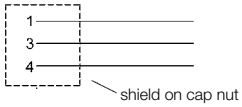

* [1] LED green = Power
[2] LED yellow = Function

Do you need more details? Our Product Finder at www.balluff.com provides you with product-specific information, including technical drawings, data sheets, user guides and more for each individual product. All items are available for download.

	BCC M313 ...	BCC M323 ...	BCC M323 ...
	M8 male, A-coded	M8 female, A-coded	M8 male, A-coded
	straight	angled	angled
	60 V AC/DC	60 V AC/DC	60 V AC/DC
	–	30 V DC	–
	4 A	4 A	4 A
	IP67, IP69K	IP67, IP69K	IP67, IP69K
		IP67	
	BCC M313-0000-20-001-_ _ _ _ _ _①-_ _ _②	BCC M323-0000-10-001-_ _ _ _ _ _①-_ _ _②	BCC M323-0000-20-001-_ _ _ _ _ _①-_ _ _②
	–	BCC M323-0000-10-004-_ _ _ _ _ _①-_ _ _②	–
	–	BCC M323-0000-10-006-_ _ _ _ _ _①-_ _ _②	–
	–	BCC M323-0000-10-036-_ _ _ _ _ _①-_ _ _②	–
	CE, UL, EAC	CE, UL, EAC	CE, UL, EAC
	148	148	148

①	Material	Color	Number of conductors × conductor cross-section	Cable temperature fixed in place	Cable temperature flexed
UNSHIELDED					
PX0334	PUR	Black	3 × 0.34 mm²	–50...+90 °C	–25...+90 °C
VX8334	PVC	Gray	3 × 0.34 mm²	–40...+105 °C	–5...+105 °C
EX43T2	TPE	Yellow	3 × AWG22	–50...+105 °C	–25...+105 °C
VX43T2	PVC	Yellow	3 × AWG22	–40...+105 °C	–5...+105 °C
SHIELDED					
PS0334	PUR	Black	3 × 0.34 mm²	–50...+90 °C	–25...+90 °C
VS8334	PVC	Gray	3 × 0.34 mm²	–40...+105 °C	–5...+105 °C

②	Cable length
CONNECTION CABLE	
020	2 m
050	5 m
100	10 m

Other cable lengths on request!

AVAILABLE AS BULK CABLE

	Order code	Part number	Cable length
PX0334	BCC0AC7	BCC 0000-0000-00-000-PX0334-10X	100 m
VX8334	BCC0C15	BCC 0000-0000-00-000-VX8334-10X	100 m
EX43T2	BCC0AEC	BCC 0000-0000-00-001-EX43T2-10X	100 m
VX43T2	BCC0AE7	BCC 0000-0000-00-001-VX43T2-10X	100 m

		BCC M415 ...	
Connection		M12 female, A-coded	
Version		straight	
Rated voltage	No LED	250 V AC/DC	
	with LED	30 V DC	
Rated current		4 A	
Degree of protection	unshielded	IP67, IP68, IP69K	
	shielded	IP67	
unshielded, no LED, N.O. signal		BCC M415-0000-1A-001-_ _ _ _ _ _①-_ _ _②	
unshielded, 2 × PNP-LED, N.O. signal		BCC M415-0000-1A-004-_ _ _ _ _ _①-_ _ _②	
unshielded, 2 × NPN-LED, N.O. signal		–	
shielded, no LED, N.O. signal		BCC M415-0000-1A-036-_ _ _ _ _ _①-_ _ _②	
unshielded, no LED, N.C. signal		BCC M415-0000-1A-002-_ _ _ _ _ _①-_ _ _②	
unshielded, 2 × PNP-LED, N.C. signal		BCC M415-0000-1A-005-_ _ _ _ _ _①-_ _ _②	
shielded, no LED, N.C. signal		BCC M415-0000-1A-037-_ _ _ _ _ _①-_ _ _②	
Approval/Conformity		CE, UL, EAC	
For drawing see page		148	

M12 female, N.O. signal

PIN 1: brown
PIN 3: blue
PIN 4: black

M12 female, N.C. signal

PIN 1: brown
PIN 2: black
PIN 3: blue

M12 male, N.O. signal

PIN 1: brown
PIN 3: blue
PIN 4: black

M12 male, N.C. signal

PIN 1: brown
PIN 2: black
PIN 3: blue

unshielded, no LED

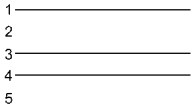

unshielded, no LED

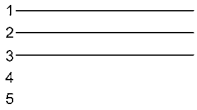

unshielded, no LED

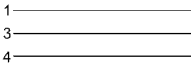

unshielded, no LED

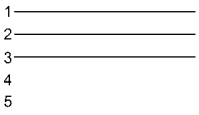

unshielded, 2 × PNP-LED*

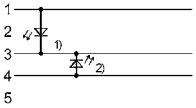

unshielded, 2 × PNP-LED*

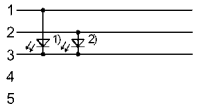

unshielded, 2 × NPN-LED*

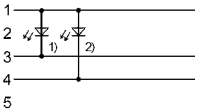

shielded, no LED

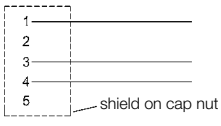

shielded, no LED

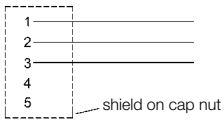

shielded, no LED

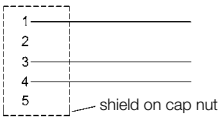

shielded, no LED

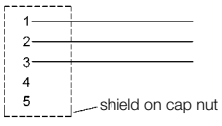

* 1) LED green = Power
2) LED yellow = Function

	BCC M413 ...	BCC M425 ...	BCC M413 ...
	M12 male, A-coded	M12 female, A-coded	M12 male, A-coded
	straight	angled	angled
	250 V AC/DC	250 V AC/DC	250 V AC/DC
	–	30 V DC	–
	4 A	4 A	4 A
	IP67, IP68, IP69K	IP67, IP68, IP69K	IP67, IP68, IP69K
	IP67	IP67	IP67
	BCC M413-0000-2A-001-_ _ _ _ _ _①-_ _ _②	BCC M425-0000-1A-001-_ _ _ _ _ _①-_ _ _②	BCC M423-0000-2A-001-_ _ _ _ _ _①-_ _ _②
	–	BCC M425-0000-1A-004-_ _ _ _ _ _①-_ _ _②	–
	–	BCC M425-0000-1A-006-_ _ _ _ _ _①-_ _ _②	–
	BCC M413-0000-2A-036-_ _ _ _ _ _①-_ _ _②	BCC M425-0000-1A-036-_ _ _ _ _ _①-_ _ _②	BCC M423-0000-2A-036-_ _ _ _ _ _①-_ _ _②
	BCC M413-0000-2A-002-_ _ _ _ _ _①-_ _ _②	BCC M425-0000-1A-002-_ _ _ _ _ _①-_ _ _②	–
	–	BCC M425-0000-1A-005-_ _ _ _ _ _①-_ _ _②	–
	BCC M413-0000-2A-037-_ _ _ _ _ _①-_ _ _②	BCC M425-0000-1A-037-_ _ _ _ _ _①-_ _ _②	–
	CE, UL, EAC	CE, UL, EAC	CE, UL, EAC
	149	149	149

①	Material	Color	Number of conductors × conductor cross-section	Cable temperature fixed in place	Cable temperature flexed
UNSHIELDED					
PX0334	PUR	Black	3 × 0.34 mm²	–50...+90 °C	–25...+90 °C
VX8334	PVC	Gray	3 × 0.34 mm²	–40...+105 °C	–5...+105 °C
EX43T2	TPE	Yellow	3 × AWG22	–50...+105 °C	–25...+105 °C
VX43T2	PVC	Yellow	3 × AWG22	–40...+105 °C	–5...+105 °C
SHIELDED					
PS0334	PUR	Black	3 × 0.34 mm²	–50...+90 °C	–25...+90 °C
VS8334	PVC	Gray	3 × 0.34 mm²	–40...+105 °C	–5...+105 °C

②	Cable length
CONNECTION CABLE	
020	2 m
050	5 m
100	10 m

Other cable lengths on request!

AVAILABLE AS BULK CABLE

	Order code	Part number	Cable length
PX0334	BCC0AC7	BCC 0000-0000-00-000-PX0334-10X	100 m
VX8334	BCC0C15	BCC 0000-0000-00-000-VX8334-10X	100 m
EX43T2	BCC0AEC	BCC 0000-0000-00-001-EX43T2-10X	100 m
VX43T2	BCC0AE7	BCC 0000-0000-00-001-VX43T2-10X	100 m

	BCC M313-M313 ...	
Connection	M8 female, A-coded/ M8 male, A-coded	
Version	straight/straight	
Rated voltage	60 V AC/DC	
Rated current	4 A	
Degree of protection	IP67, IP69K/IP67, IP69K	
unshielded, no LED	BCC M313-M313-30-300-_ _ _ _ _ _①-_ _ _②	
unshielded, no LED, N.O. signal	–	
Approval/Conformity	CE, UL, EAC	
For drawing see page	149	

M8 female/M8 male

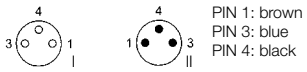

PIN 1: brown
PIN 3: blue
PIN 4: black

M8 female/M12 male, N.O. signal

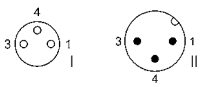

PIN 1: brown
PIN 3: blue
PIN 4: black

unshielded, no LED

unshielded, no LED

Do you need more details? Our Product Finder at www.balluff.com provides you with product-specific information, including technical drawings, data sheets, user guides and more for each individual product. All items are available for download.

	BCC M313-M323 ...	BCC M313-M413 ...	BCC M313-M423 ...
	M8 female, A-coded/ M8 male, A-coded	M8 female, A-coded/ M12 male, A-coded	M8 female, A-coded/ M12 male, A-coded
	straight/angled	straight/straight	straight/angled
	60 V AC/DC	60 V AC/DC	60 V AC/DC
	4 A	4 A	4 A
	IP67, IP69K/IP67, IP69K	IP67, IP69K/IP67, IP68, IP69K	IP67, IP69K/IP67, IP68, IP69K
	BCC M313-M323-30-300-_ _ _ _ _ _①-_ _ _②	–	–
	–	BCC M313-M413-3E-300-_ _ _ _ _ _①-_ _ _②	BCC M313-M423-3E-300-_ _ _ _ _ _①-_ _ _②
	CE, UL, EAC	CE, UL, EAC	CE, UL, EAC
	149	150	150

①	Material	Color	Number of conductors × conductor cross-section	Cable temperature fixed in place	Cable temperature flexed
UNSHIELDED					
PX0334	PUR	Black	3 × 0.34 mm²	–50...+90 °C	–25...+90 °C
VX8334	PVC	Gray	3 × 0.34 mm²	–40...+105 °C	–5...+105 °C
EX43T2	TPE	Yellow	3 × AWG22	–50...+105 °C	–25...+105 °C
VX43T2	PVC	Yellow	3 × AWG22	–40...+105 °C	–5...+105 °C

②	Cable length
CABLE	
003	0.3 m
006	0.6 m
010	1 m
015	1.5 m
020	2 m
050	5 m

Other cable lengths on request!

AVAILABLE AS BULK CABLE

	Order code	Part number	Cable length
PX0334	BCC0AC7	BCC 0000-0000-00-000-PX0334-10X	100 m
VX8334	BCC0C15	BCC 0000-0000-00-000-VX8334-10X	100 m
EX43T2	BCC0AEC	BCC 0000-0000-00-001-EX43T2-10X	100 m
VX43T2	BCC0AE7	BCC 0000-0000-00-001-VX43T2-10X	100 m

		BCC M323-M313 ...	
Connection		M8 female, A-coded/ M8 male, A-coded	
Version		angled/straight	
Rated voltage	No LED	60 V AC/DC	
	with LED	30 V DC	
Rated current		4 A	
Degree of protection		IP67, IP69K/IP67, IP69K	
unshielded, no LED		BCC M323-M313-30-300-_ _ _ _ _ _①-_ _ _②	
unshielded, 2 × PNP-LED		BCC M323-M313-30-602-_ _ _ _ _ _①-_ _ _②	
unshielded, no LED, N.O. signal		–	
unshielded, PNP-LED, N.O. signal		–	
Approval/Conformity		CE, UL, EAC	
For drawing see page		150	

M8 female/M8 male

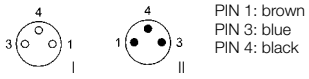

PIN 1: brown
PIN 3: blue
PIN 4: black

unshielded, no LED

unshielded, 2 × PNP-LED*

M8 female/M12 male, N.O. signal

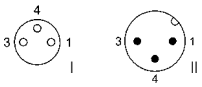

PIN 1: brown
PIN 3: blue
PIN 4: black

unshielded, no LED

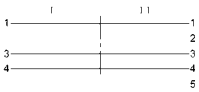

unshielded, 2 × PNP-LED*

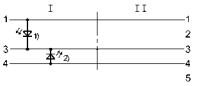

* 1) LED green = Power
2) LED yellow = Function

Do you need more details? Our Product Finder at www.balluff.com provides you with product-specific information, including technical drawings, data sheets, user guides and more for each individual product. All items are available for download.

	BCC M323-M323 ...	BCC M323-M413 ...	BCC M323-M423 ...
	M8 female, A-coded/ M8 male, A-coded	M8 female, A-coded/ M12 male, A-coded	M8 female, A-coded/ M12 male, A-coded
	angled/angled	angled/straight	angled/angled
	60 V AC/DC	60 V AC/DC	60 V AC/DC
	–	30 V DC	–
	4 A	4 A	4 A
	IP67, IP69K/IP67, IP69K	IP67, IP69K/IP67, IP68, IP69K	IP67, IP69K/IP67, IP68, IP69K
	BCC M323-M323-30-300-_ _ _ _ _ _①-_ _ _②	–	–
	–	–	–
	–	BCC M323-M413-3E-300-_ _ _ _ _ _①-_ _ _②	BCC M323-M423-3E-300-_ _ _ _ _ _①-_ _ _②
	–	BCC M323-M413-3E-602-_ _ _ _ _ _①-_ _ _②	–
	CE, UL, EAC	CE, UL, EAC	CE, UL, EAC
	150	150	150

①	Material	Color	Number of conductors × conductor cross-section	Cable temperature fixed in place	Cable temperature flexed
UNSHIELDED					
PX0334	PUR	Black	3 × 0.34 mm²	–50...+90 °C	–25...+90 °C
VX8334	PVC	Gray	3 × 0.34 mm²	–40...+105 °C	–5...+105 °C
EX43T2	TPE	Yellow	3 × AWG22	–50...+105 °C	–25...+105 °C
VX43T2	PVC	Yellow	3 × AWG22	–40...+105 °C	–5...+105 °C

②	Cable length
CABLE	
003	0.3 m
006	0.6 m
010	1 m
015	1.5 m
020	2 m
050	5 m

Other cable lengths on request!

AVAILABLE AS BULK CABLE

	Order code	Part number	Cable length
PX0334	BCC0AC7	BCC 0000-0000-00-000-PX0334-10X	100 m
VX8334	BCC0C15	BCC 0000-0000-00-000-VX8334-10X	100 m
EX43T2	BCC0AEC	BCC 0000-0000-00-001-EX43T2-10X	100 m
VX43T2	BCC0AE7	BCC 0000-0000-00-001-VX43T2-10X	100 m

	BCC M415-M313 ...	
Connection	M12 female, A-coded/ M8 male, A-coded	
Version	straight/straight	
Rated voltage	60 V AC/DC	
Rated current	4 A	
Degree of protection	IP67, IP68, IP69K/IP67, IP69K	
unshielded, no LED, N.O. signal	BCC M415-M313-3F-300-_ _ _ _ _ _①-_ _ _②	
Approval/Conformity	CE, UL, EAC	
For drawing see page	150	

M12 female/M8 male,
N.O. signal

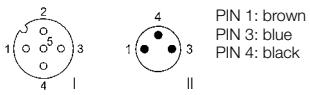

PIN 1: brown
PIN 3: blue
PIN 4: black

unshielded, no LED

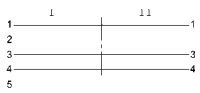

M12 female/M12 male,
N.O. signal

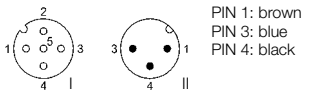

PIN 1: brown
PIN 3: blue
PIN 4: black

unshielded, no LED

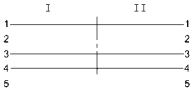

Do you need more details? Our Product Finder at www.balluff.com provides you with product-specific information, including technical drawings, data sheets, user guides and more for each individual product. All items are available for download.

	BCC M415-M323 ...	BCC M415-M413 ...	BCC M415-M423 ...
	M12 female, A-coded/ M8 male, A-coded	M12 female, A-coded/ M12 male, A-coded	M12 female, A-coded/ M12 male, A-coded
	straight/angled	straight/straight	straight/angled
	60 V AC/DC	250 V AC/DC	250 V AC/DC
	4 A	4 A	4 A
	IP67, IP68, IP69K/IP67, IP69K	IP67, IP68, IP69K/IP67, IP68, IP69K	IP67, IP68, IP69K/IP67, IP68, IP69K
	BCC M415-M323-3F-300-_ _ _ _ _ _①-_ _ _②	BCC M415-M413-3A-300-_ _ _ _ _ _①-_ _ _②	BCC M415-M423-3A-300-_ _ _ _ _ _①-_ _ _②
	CE, UL, EAC	CE, UL, EAC	CE, UL, EAC
	150	151	151

①	Material	Color	Number of conductors × conductor cross-section	Cable temperature fixed in place	Cable temperature flexed
UNSHIELDED					
PX0334	PUR	Black	3 × 0.34 mm²	–50...+90 °C	–25...+90 °C
VX8334	PVC	Gray	3 × 0.34 mm²	–40...+105 °C	–5...+105 °C
EX43T2	TPE	Yellow	3 × AWG22	–50...+105 °C	–25...+105 °C
VX43T2	PVC	Yellow	3 × AWG22	–40...+105 °C	–5...+105 °C

②	Cable length
CABLE	
003	0.3 m
006	0.6 m
010	1 m
015	1.5 m
020	2 m
050	5 m

Other cable lengths on request!

AVAILABLE AS BULK CABLE

	Order code	Part number	Cable length
PX0334	BCC0AC7	BCC 0000-0000-00-000-PX0334-10X	100 m
VX8334	BCC0C15	BCC 0000-0000-00-000-VX8334-10X	100 m
EX43T2	BCC0AEC	BCC 0000-0000-00-001-EX43T2-10X	100 m
VX43T2	BCC0AE7	BCC 0000-0000-00-001-VX43T2-10X	100 m

		BCC M425-M313 ...
Connection		M12 female, A-coded/ M8 male, A-coded
Version		angled/straight
Rated voltage	No LED	60 V AC/DC
	with LED	30 V DC
Rated current		4 A
Degree of protection		IP67, IP68, IP69K/IP67, IP69K
unshielded, no LED, N.O. signal		BCC M425-M313-3F-300-_ _ _ _ _ _①-_ _ _②
unshielded, 2 × PNP-LED, N.O. signal		BCC M425-M313-3F-602-_ _ _ _ _ _①-_ _ _②
Approval/Conformity		CE, UL, EAC
For drawing see page		151

M12 female/M8 male,
N.O. signal

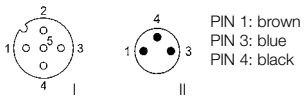

PIN 1: brown
PIN 3: blue
PIN 4: black

M12 female/M12 male,
N.O. signal

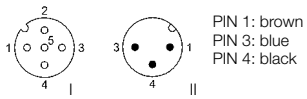

PIN 1: brown
PIN 3: blue
PIN 4: black

unshielded, no LED

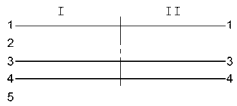

unshielded, no LED

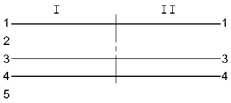

unshielded, 2 × PNP-LED*

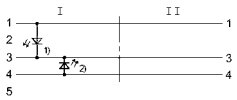

unshielded, 2 × PNP-LED*

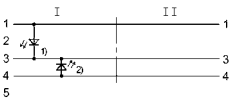

* 1) LED green = Power
2) LED yellow = Function

Do you need more details? Our Product Finder at www.balluff.com provides you with product-specific information, including technical drawings, data sheets, user guides and more for each individual product. All items are available for download.

	BCC M425-M323 ...	BCC M425-M413 ...	BCC M425-M423 ...
	M12 female, A-coded/ M8 male, A-coded	M12 female, A-coded/ M12 male, A-coded	M12 female, A-coded/ M12 male, A-coded
	angled/angled	angled/straight	angled/angled
	60 V AC/DC	250 V AC/DC	250 V AC/DC
	30 V DC	30 V DC	–
	4 A	4 A	4 A
	IP67, IP68, IP69K/IP67, IP69K	IP67, IP68, IP69K/IP67, IP68, IP69K	IP67, IP68, IP69K/IP67, IP68, IP69K
	BCC M425-M323-3F-300-_ _ _ _ _ _①-_ _ _②	BCC M425-M413-3A-300-_ _ _ _ _ _①-_ _ _②	BCC M425-M423-3A-300-_ _ _ _ _ _①-_ _ _②
	BCC M425-M323-3F-602-_ _ _ _ _ _①-_ _ _②	BCC M425-M413-3A-602-_ _ _ _ _ _①-_ _ _②	–
	CE, UL, EAC	CE, UL, EAC	CE, UL, EAC
	151	151	151

①	Material	Color	Number of conductors × conductor cross-section	Cable temperature fixed in place	Cable temperature flexed
UNSHIELDED					
PX0334	PUR	Black	3 × 0.34 mm²	–50...+90 °C	–25...+90 °C
VX8334	PVC	Gray	3 × 0.34 mm²	–40...+105 °C	–5...+105 °C
EX43T2	TPE	Yellow	3 × AWG22	–50...+105 °C	–25...+105 °C
VX43T2	PVC	Yellow	3 × AWG22	–40...+105 °C	–5...+105 °C

②	Cable length
CABLE	
003	0.3 m
006	0.6 m
010	1 m
015	1.5 m
020	2 m
050	5 m

Other cable lengths on request!

AVAILABLE AS BULK CABLE

	Order code	Part number	Cable length
PX0334	BCC0AC7	BCC 0000-0000-00-000-PX0334-10X	100 m
VX8334	BCC0C15	BCC 0000-0000-00-000-VX8334-10X	100 m
EX43T2	BCC0AEC	BCC 0000-0000-00-001-EX43T2-10X	100 m
VX43T2	BCC0AE7	BCC 0000-0000-00-001-VX43T2-10X	100 m

		BCC M314 ...
Connection		M8 female, A-coded
Version		straight
Rated voltage	No LED	60 V AC/DC
	with LED	–
Rated current		4 A
Degree of protection	unshielded	IP67, IP69K
	shielded	IP67
unshielded, no LED		BCC M314-0000-10-003-_ _ _ _ _ _①-_ _ _②
unshielded, 2 × PNP-LED		–
shielded, no LED		BCC M314-0000-10-014-_ _ _ _ _ _①-_ _ _②
Approval/Conformity		CE, UL, EAC
For drawing see page		151

M8 female

PIN 1: brown
PIN 2: white
PIN 3: blue
PIN 4: black

M8 male

PIN 1: brown
PIN 2: white
PIN 3: blue
PIN 4: black

unshielded, no LED

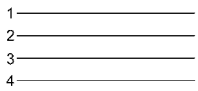

unshielded, no LED

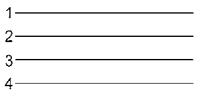

unshielded, 2 × PNP-LED*

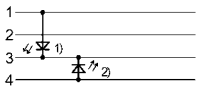

shielded, no LED

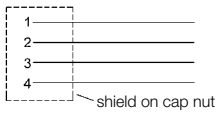

* 1) LED green = Power
2) LED yellow = Function

Do you need more details? Our Product Finder at www.balluff.com provides you with product-specific information, including technical drawings, data sheets, user guides and more for each individual product. All items are available for download.

	BCC M314 ...	BCC M324 ...	BCC M324 ...
	M8 male, A-coded	M8 female, A-coded	M8 male, A-coded
	straight	angled	angled
	60 V AC/DC	60 V AC/DC	60 V AC/DC
	–	30 V DC	–
	4 A	4 A	4 A
	IP67, IP69K	IP67, IP69K	IP67, IP69K
	–	IP67	–
	BCC M314-0000-20-003-_ _ _ _ _ _①-_ _ _②	BCC M324-0000-10-003-_ _ _ _ _ _①-_ _ _②	BCC M324-0000-20-003-_ _ _ _ _ _①-_ _ _②
	–	BCC M324-0000-10-008-_ _ _ _ _ _①-_ _ _②	–
	–	BCC M324-0000-10-014-_ _ _ _ _ _①-_ _ _②	–
	CE, UL, EAC	CE, UL, EAC	CE, UL, EAC
	151	152	152

①	Material	Color	Number of conductors × conductor cross-section	Cable temperature fixed in place	Cable temperature flexed
UNSHIELDED					
PX0434	PUR	Black	4 × 0.34 mm²	–50...+90 °C	–25...+90 °C
VX8434	PVC	Gray	4 × 0.34 mm²	–40...+105 °C	–5...+105 °C
EX44T2	TPE	Yellow	4 × AWG22	–50...+105 °C	–25...+105 °C
VX44T2	PVC	Yellow	4 × AWG22	–40...+105 °C	–5...+105 °C
SHIELDED					
PS0434	PUR	Black	4 × 0.34 mm²	–50...+90 °C	–25...+90 °C
VS8434	PVC	Gray	4 × 0.34 mm²	–40...+105 °C	–5...+105 °C

②	Cable length
CONNECTION CABLE	
020	2 m
050	5 m
100	10 m

Other cable lengths on request!

AVAILABLE AS BULK CABLE

	Order code	Part number	Cable length
PX0434	BCC0AC8	BCC 0000-0000-00-000-PX0434-10X	100 m
VX8434	BCC0C14	BCC 0000-0000-00-000-VX8434-10X	100 m
EX44T2	BCC0AEE	BCC 0000-0000-00-003-EX44T2-10X	100 m
VX44T2	BCC0AE8	BCC 0000-0000-00-003-VX44T2-10X	100 m

		BCC M415 ...	
Connection		M12 female, A-coded	
Version		straight	
Rated voltage	No LED	250 V AC/DC	
	with LED	30 V DC	
Rated current		4 A	
Degree of protection	unshielded	IP67, IP68, IP69K	
	shielded	IP67	
unshielded, no LED		BCC M415-0000-1A-003-_ _ _ _ _ _①-_ _ _②	
unshielded, 2 × PNP-LED		BCC M415-0000-1A-008-_ _ _ _ _ _①-_ _ _②	
unshielded, 3 × PNP-LED		BCC M415-0000-1A-010-_ _ _ _ _ _①-_ _ _②	
shielded, no LED		BCC M415-0000-1A-014-_ _ _ _ _ _①-_ _ _②	
Approval/Conformity		CE, UL, EAC	
For drawing see page		152	

M12 female

PIN 1: brown
PIN 2: white
PIN 3: blue
PIN 4: black

M12 male

PIN 1: brown
PIN 2: white
PIN 3: blue
PIN 4: black

unshielded, no LED

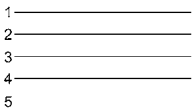

unshielded, no LED

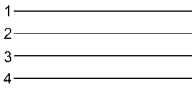

unshielded, 2 × PNP-LED*

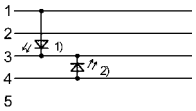

unshielded, 2 × PNP-LED*

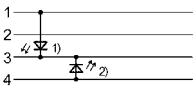

unshielded, 3 × PNP-LED*

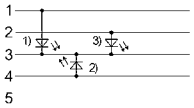

shielded, no LED

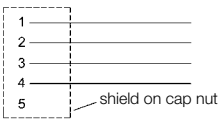

shielded, no LED

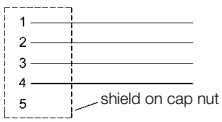

* [1] LED green = Power
[2] LED yellow = Function
[3] LED white = Function

Do you need more details? Our Product Finder at www.balluff.com provides you with product-specific information, including technical drawings, data sheets, user guides and more for each individual product. All items are available for download.

	BCC M414 ...	BCC M425 ...	BCC M424 ...
	M12 male, A-coded	M12 female, A-coded	M12 female, A-coded
	straight	angled	angled
	250 V AC/DC	250 V AC/DC	250 V AC/DC
	–	30 V DC	30 V DC
	4 A	4 A	4 A
	IP67, IP68, IP69K	IP67, IP68, IP69K	IP67, IP68, IP69K
	IP67	IP67	IP67
	BCC M414-0000-2A-003-_ _ _ _ _ _①-_ _ _②	BCC M425-0000-1A-003-_ _ _ _ _ _①-_ _ _②	BCC M424-0000-2A-003-_ _ _ _ _ _①-_ _ _②
	–	BCC M425-0000-1A-008-_ _ _ _ _ _①-_ _ _②	BCC M424-0000-2A-008-_ _ _ _ _ _①-_ _ _②
	–	BCC M425-0000-1A-010-_ _ _ _ _ _①-_ _ _②	–
	BCC M414-0000-2A-014-_ _ _ _ _ _①-_ _ _②	BCC M425-0000-1A-014-_ _ _ _ _ _①-_ _ _②	BCC M424-0000-2A-014-_ _ _ _ _ _①-_ _ _②
	CE, UL, EAC	CE, UL, EAC	CE, UL, EAC
	152	153	153

①	Material	Color	Number of conductors × conductor cross-section	Cable temperature fixed in place	Cable temperature flexed
UNSHIELDED					
PX0434	PUR	Black	4 × 0.34 mm²	–50...+90 °C	–25...+90 °C
VX8434	PVC	Gray	4 × 0.34 mm²	–40...+105 °C	–5...+105 °C
EX44T2	TPE	Yellow	4 × AWG22	–50...+105 °C	–25...+105 °C
VX44T2	PVC	Yellow	4 × AWG22	–40...+105 °C	–5...+105 °C
SHIELDED					
PS0434	PUR	Black	4 × 0.34 mm²	–50...+90 °C	–25...+90 °C
VS8434	PVC	Gray	4 × 0.34 mm²	–40...+105 °C	–5...+105 °C

②	Cable length
CONNECTION CABLE	
020	2 m
050	5 m
100	10 m

Other cable lengths on request!

AVAILABLE AS BULK CABLE

	Order code	Part number	Cable length
PX0434	BCC0AC8	BCC 0000-0000-00-000-PX0434-10X	100 m
VX8434	BCC0C14	BCC 0000-0000-00-000-VX8434-10X	100 m
EX44T2	BCC0AEE	BCC 0000-0000-00-003-EX44T2-10X	100 m
VX44T2	BCC0AE8	BCC 0000-0000-00-003-VX44T2-10X	100 m

	BCC M314-M314 ...	
Connection	M8 female, A-coded/ M8 male, A-coded	
Version	straight/straight	
Rated voltage	60 V AC/DC	
Rated current	4 A	
Degree of protection	IP67, IP69K/IP67, IP69K	
unshielded, no LED	BCC M314-M314-30-304-_ _ _ _ _ _①-_ _ _②	
Approval/Conformity	CE, UL, EAC	
For drawing see page	153	

M8 female/M8 male

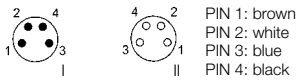

PIN 1: brown
PIN 2: white
PIN 3: blue
PIN 4: black

M8 female/M12 male

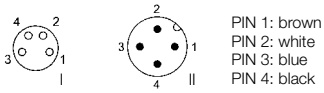

PIN 1: brown
PIN 2: white
PIN 3: blue
PIN 4: black

unshielded, no LED

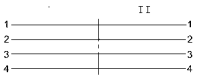

unshielded, no LED

Do you need more details? Our Product Finder at www.balluff.com provides you with product-specific information, including technical drawings, data sheets, user guides and more for each individual product. All items are available for download.

	BCC M314-M324 ...	BCC M314-M414 ...	BCC M314-M424 ...
	M8 female, A-coded/ M8 male, A-coded	M8 female, A-coded/ M12 male, A-coded	M8 female, A-coded/ M12 male, A-coded
	straight/angled	straight/straight	straight/angled
	60 V AC/DC	60 V AC/DC	60 V AC/DC
	4 A	4 A	4 A
	IP67, IP69K/IP67, IP69K	IP67, IP69K/IP67, IP68, IP69K	IP67, IP69K/IP67, IP68, IP69K
	BCC M314-M324-30-304-_ _ _ _ _ _①-_ _ _②	BCC M314-M414-3E-304-_ _ _ _ _ _①-_ _ _②	BCC M314-M424-3E-304-_ _ _ _ _ _①-_ _ _②
	CE, UL, EAC	CE, UL, EAC	CE, UL, EAC
	163	153	153

①	Material	Color	Number of conductors × conductor cross-section	Cable temperature fixed in place	Cable temperature flexed
UNSHIELDED					
PX0434	PUR	Black	4 × 0.34 mm²	–50...+90 °C	–25...+90 °C
VX8434	PVC	Gray	4 × 0.34 mm²	–40...+105 °C	–5...+105 °C
EX44T2	TPE	Yellow	4 × AWG22	–50...+105 °C	–25...+105 °C
VX44T2	PVC	Yellow	4 × AWG22	–40...+105 °C	–5...+105 °C

②	Cable length
CABLE	
003	0.3 m
006	0.6 m
010	1 m
015	1.5 m
020	2 m
050	5 m

Other cable lengths on request!

AVAILABLE AS BULK CABLE

	Order code	Part number	Cable length
PX0434	BCC0AC8	BCC 0000-0000-00-000-PX0434-10X	100 m
VX8434	BCC0C14	BCC 0000-0000-00-000-VX8434-10X	100 m
EX44T2	BCC0AEE	BCC 0000-0000-00-003-EX44T2-10X	100 m
VX44T2	BCC0AE8	BCC 0000-0000-00-003-VX44T2-10X	100 m

	BCC M324-M314 ...	
Connection	M8 female, A-coded/ M8 male, A-coded	
Version	angled/straight	
Rated voltage	60 V AC/DC	
Rated current	4 A	
Degree of protection	IP67, IP69K/IP67, IP69K	
unshielded, no LED	BCC M324-M314-30-304-_ _ _ _ _ _①-_ _ _②	
Approval/Conformity	CE, UL, EAC	
For drawing see page	154	

M8 female/M8 male

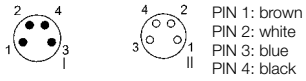

PIN 1: brown
PIN 2: white
PIN 3: blue
PIN 4: black

M8 female/M12 male

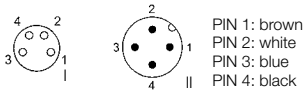

PIN 1: brown
PIN 2: white
PIN 3: blue
PIN 4: black

unshielded, no LED

unshielded, no LED

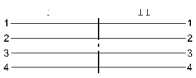

Do you need more details? Our Product Finder at www.balluff.com provides you with product-specific information, including technical drawings, data sheets, user guides and more for each individual product. All items are available for download.

	BCC M324-M324 ...	BCC M324-M414 ...	BCC M324-M424 ...
	M8 female, A-coded/ M8 male, A-coded	M8 female, A-coded/ M12 male, A-coded	M8 female, A-coded/ M12 male, A-coded
	angled/angled	angled/straight	angled/angled
	60 V AC/DC	60 V AC/DC	60 V AC/DC
	4 A	4 A	4 A
	IP67, IP69K/IP67, IP69K	IP67, IP69K/IP67, IP68, IP69K	IP67, IP69K/IP67, IP68, IP69K
	BCC M324-M324-30-304-_ _ _ _ _ _①-_ _ _②	BCC M324-M414-3E-304-_ _ _ _ _ _①-_ _ _②	BCC M324-M424-3E-304-_ _ _ _ _ _①-_ _ _②
	CE, UL, EAC	CE, UL, EAC	CE, UL, EAC
	154	154	154

①	Material	Color	Number of conductors × conductor cross-section	Cable temperature fixed in place	Cable temperature flexed
UNSHIELDED					
PX0434	PUR	Black	4 × 0.34 mm²	–50...+90 °C	–25...+90 °C
VX8434	PVC	Gray	4 × 0.34 mm²	–40...+105 °C	–5...+105 °C
EX44T2	TPE	Yellow	4 × AWG22	–50...+105 °C	–25...+105 °C
VX44T2	PVC	Yellow	4 × AWG22	–40...+105 °C	–5...+105 °C

②	Cable length
CABLE	
003	0.3 m
006	0.6 m
010	1 m
015	1.5 m
020	2 m
050	5 m

Other cable lengths on request!

AVAILABLE AS BULK CABLE

	Order code	Part number	Cable length
PX0434	BCC0AC8	BCC 0000-0000-00-000-PX0434-10X	100 m
VX8434	BCC0C14	BCC 0000-0000-00-000-VX8434-10X	100 m
EX44T2	BCC0AEE	BCC 0000-0000-00-003-EX44T2-10X	100 m
VX44T2	BCC0AE8	BCC 0000-0000-00-003-VX44T2-10X	100 m

		BCC M415-M314 ...	
Connection		M12 female, A-coded/ M8 male, A-coded	
Version		straight/straight	
Rated voltage	No LED	60 V AC/DC	
	with LED	–	
Rated current		4 A	
Degree of protection	unshielded	IP67, IP68, IP69K/IP67, IP69K	
	shielded	–	
unshielded, no LED		BCC M415-M314-3F-304-_ _ _ _ _ _①-_ _ _②	
unshielded, 2 × PNP-LED		–	
shielded, no LED		–	
Approval/Conformity		CE, UL, EAC	
For drawing see page		154	

M12 female/M8 male

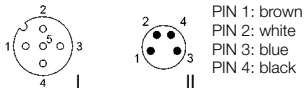

unshielded, no LED

M12 female/M12 male

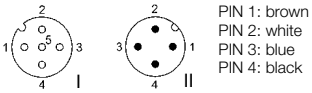

unshielded, no LED

unshielded, 2 × PNP-LED*

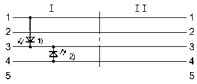

* 1) LED green = Power
2) LED yellow = Function

shielded, no LED

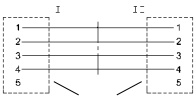

shield on cap nut

Do you need more details? Our Product Finder at www.balluff.com provides you with product-specific information, including technical drawings, data sheets, user guides and more for each individual product. All items are available for download.

	BCC M415-M324 ...	BCC M415-M414 ...	BCC M415-M424 ...
	M12 female, A-coded/ M8 male, A-coded	M12 female, A-coded/ M12 male, A-coded	M12 female, A-coded/ M12 male, A-coded
	straight/angled	straight/straight	straight/angled
	60 V AC/DC	250 V AC/DC	250 V AC/DC
	–	30 V DC	–
	4 A	4 A	4 A
	IP67, IP68, IP69K/IP67, IP69K	IP67, IP68, IP69K/IP67, IP68, IP69K	IP67, IP68, IP69K/IP67, IP68, IP69K
	–	IP67/IP67	–
	BCC M415-M324-3F-304-_ _ _ _ _ _①-_ _ _②	BCC M415-M414-3A-304-_ _ _ _ _ _①-_ _ _②	BCC M415-M424-3A-304-_ _ _ _ _ _①-_ _ _②
	–	BCC M415-M414-3A-606-_ _ _ _ _ _①-_ _ _②	–
	–	BCC M415-M414-3A-305-PS0434①-_ _ _②	–
	CE, UL, EAC	CE, UL, EAC	CE, UL, EAC
	154	154	155

①	Material	Color	Number of conductors × conductor cross-section	Cable temperature fixed in place	Cable temperature flexed
UNSHIELDED					
PX0434	PUR	Black	4 × 0.34 mm²	–50...+90 °C	–25...+90 °C
VX8434	PVC	Gray	4 × 0.34 mm²	–40...+105 °C	–5...+105 °C
EX44T2	TPE	Yellow	4 × AWG22	–50...+105 °C	–25...+105 °C
VX44T2	PVC	Yellow	4 × AWG22	–40...+105 °C	–5...+105 °C
SHIELDED					
PS0434	PUR	Black	4 × 0.34 mm²	–50...+90 °C	–25...+90 °C

②	Cable length
CABLE	
003	0.3 m
006	0.6 m
010	1 m
015	1.5 m
020	2 m
050	5 m

Other cable lengths on request!

AVAILABLE AS BULK CABLE

	Order code	Part number	Cable length
PX0434	BCC0AC8	BCC 0000-0000-00-000-PX0434-10X	100 m
VX8434	BCC0C14	BCC 0000-0000-00-000-VX8434-10X	100 m
EX44T2	BCC0AEE	BCC 0000-0000-00-003-EX44T2-10X	100 m
VX44T2	BCC0AE8	BCC 0000-0000-00-003-VX44T2-10X	100 m

		BCC M425-M314 ...	
Connection		M12 female, A-coded/ M8 male, A-coded	
Version		angled/straight	
Rated voltage	No LED	60 V AC/DC	
	with LED	–	
Rated current		4 A	
Degree of protection		IP67, IP68, IP69K/IP67, IP69K	
unshielded, no LED		BCC M425-M314-3F-304-_ _ _ _ _ _①-_ _ _②	
unshielded, 2 × PNP-LED		–	
Approval/Conformity		CE, UL, EAC	
For drawing see page		155	

M12 female/M8 male

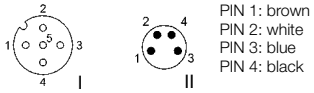

PIN 1: brown
PIN 2: white
PIN 3: blue
PIN 4: black

M12 female/M12 male

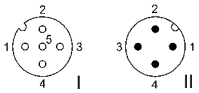

PIN 1: brown
PIN 2: white
PIN 3: blue
PIN 4: black

unshielded, no LED

unshielded, no LED

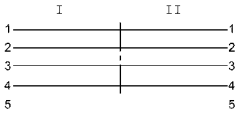

unshielded, 2 × PNP-LED*

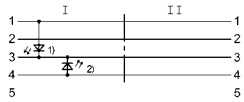

* 1) LED green = Power
2) LED yellow = Function

Do you need more details? Our Product Finder at www.balluff.com provides you with product-specific information, including technical drawings, data sheets, user guides and more for each individual product. All items are available for download.

	BCC M425-M324 ...	BCC M425-M414 ...	BCC M425-M424 ...
	M12 female, A-coded/ M8 male, A-coded	M12 female, A-coded/ M12 male, A-coded	M12 female, A-coded/ M12 male, A-coded
	angled/angled	angled/straight	angled/angled
	60 V AC/DC	250 V AC/DC	250 V AC/DC
	–	30 V DC	–
	4 A	4 A	4 A
	IP67, IP68, IP69K/IP67, IP69K	IP67, IP68, IP69K/IP67, IP68, IP69K	IP67, IP68, IP69K/IP67, IP68, IP69K
	BCC M425-M324-3F-304-_ _ _ _ _ _①-_ _ _②	BCC M425-M414-3A-304-_ _ _ _ _ _①-_ _ _②	BCC M425-M424-3A-304-_ _ _ _ _ _①-_ _ _②
	–	BCC M425-M414-3A-606-_ _ _ _ _ _①-_ _ _②	–
	CE, UL, EAC	CE, UL, EAC	CE, UL, EAC
	155	155	155

①	Material	Color	Number of conductors × conductor cross-section	Cable temperature fixed in place	Cable temperature flexed
UNSHIELDED					
PX0434	PUR	Black	4 × 0.34 mm²	–50...+90 °C	–25...+90 °C
VX8434	PVC	Gray	4 × 0.34 mm²	–40...+105 °C	–5...+105 °C
EX44T2	TPE	Yellow	4 × AWG22	–50...+105 °C	–25...+105 °C
VX44T2	PVC	Yellow	4 × AWG22	–40...+105 °C	–5...+105 °C

②	Cable length
CABLE	
003	0.3 m
006	0.6 m
010	1 m
015	1.5 m
020	2 m
050	5 m

Other cable lengths on request!

AVAILABLE AS BULK CABLE

	Order code	Part number	Cable length
PX0434	BCC0AC8	BCC 0000-0000-00-000-PX0434-10X	100 m
VX8434	BCC0C14	BCC 0000-0000-00-000-VX8434-10X	100 m
EX44T2	BCC0AEE	BCC 0000-0000-00-003-EX44T2-10X	100 m
VX44T2	BCC0AE8	BCC 0000-0000-00-003-VX44T2-10X	100 m

		BCC M415 ...
Connection		M12 female, A-coded
Version		straight
Rated voltage	No LED	60 V AC/DC
	with LED	–
Rated current		4 A
Degree of protection		IP67, IP68, IP69K
unshielded, no LED, no PE		BCC M415-0000-1A-017-PX0534①-_ _ _②
unshielded, no LED, with PE		BCC M415-0000-1A-034-PX0534①-_ _ _②
unshielded, 3 × PNP-LED, no PE		–
unshielded, 3 × PNP-LED, with PE		–
Approval/Conformity		CE, UL, EAC
For drawing see page		155

M12 female, no PE

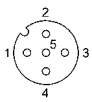

PIN 1: brown
PIN 2: white
PIN 3: blue
PIN 4: black
PIN 5: gray

M12 male, no PE

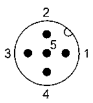

PIN 1: brown
PIN 2: white
PIN 3: blue
PIN 4: black
PIN 5: gray

M12 female, with PE

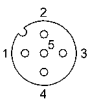

PIN 1: brown
PIN 2: white
PIN 3: blue
PIN 4: black
PIN 5: green/yellow

M12 male, with PE

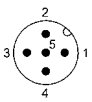

PIN 1: brown
PIN 2: white
PIN 3: blue
PIN 4: black
PIN 5: green/yellow

unshielded, no LED

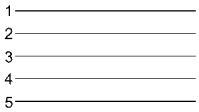

unshielded, no LED

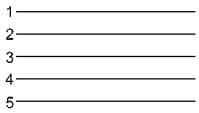

unshielded, no LED

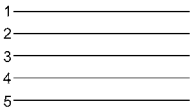

unshielded, no LED

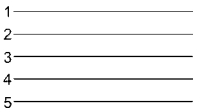

unshielded, 3 × PNP-LED*

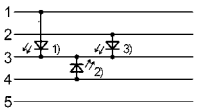

unshielded, 3 × PNP-LED*

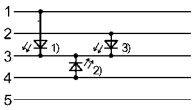

* [1] LED green = Power
[2] LED yellow = Function
[3] LED white = Function

Do you need more details? Our Product Finder at www.balluff.com provides you with product-specific information, including technical drawings, data sheets, user guides and more for each individual product. All items are available for download.

	BCC M415 ...	BCC M425 ...
	M12 male, A-coded	M12 female, A-coded
	straight	angled
	60 V AC/DC	60 V AC/DC
	–	30 V DC
	4 A	4 A
	IP67, IP68, IP69K	IP67, IP68, IP69K
	BCC M415-0000-2A-017-PX0534①-_ _ _②	BCC M425-0000-1A-017-PX0534①-_ _ _②
	BCC M415-0000-2A-034-PX0534①-_ _ _②	BCC M425-0000-1A-034-PX0534①-_ _ _②
	–	BCC M425-0000-1A-039-PX0534①-_ _ _②
	–	BCC M425-0000-1A-040-PX0534①-_ _ _②
	CE, UL, EAC	CE, UL, EAC
	155	155

①	Material	Color	Number of conductors × conductor cross-section	Cable temperature fixed in place	Cable temperature flexed
UNSHIELDED					
PX0534	PUR	Black	5 × 0.34 mm²	–50...+90 °C	–25...+90 °C

②	Cable length
CONNECTION CABLE	
020	2 m
050	5 m
100	10 m

Other cable lengths on request!

AVAILABLE AS BULK CABLE

	Order code	Part number	Cable length
PX0534	BCC0AC9	BCC 0000-0000-00-000-PX0534-10X	100 m

		BCC M415-M415 ...
Connection		M12 female, A-coded/ M12 male, A-coded
Version		straight/straight
Rated voltage	No LED	60 V AC/DC
	with LED	–
Rated current		4 A
Degree of protection	unshielded	IP67, IP68, IP69K/IP67, IP68, IP69K
	shielded	IP67/IP67
unshielded, no LED, no PE		BCC M415-M415-3A-312-PX0534①-_ _ _②
unshielded, no LED, with PE		BCC M415-M415-3A-313-PX0534①-_ _ _②
unshielded, 3 × PNP-LED, no PE		–
unshielded, 3 × PNP-LED, with PE		–
shielded, no LED, with PE		BCC M415-M415-3A-315-PS0534①-_ _ _②
Approval/Conformity		CE, UL, EAC
For drawing see page		156

M12 female/M12 male, no PE

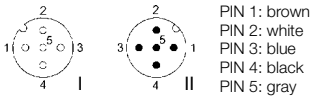

PIN 1: brown
PIN 2: white
PIN 3: blue
PIN 4: black
PIN 5: gray

M12 female/M12 male, with PE

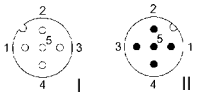

PIN 1: brown
PIN 2: white
PIN 3: blue
PIN 4: black
PIN 5: green/yellow

unshielded, no LED

unshielded, no LED

unshielded, 3 × PNP-LED*

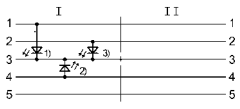

unshielded, 3 × PNP-LED*

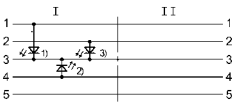

* 1) LED green = Power
2) LED yellow = Function
3) LED white = Function

shielded, no LED

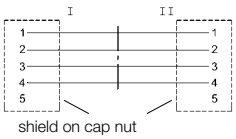

Do you need more details? Our Product Finder at www.balluff.com provides you with product-specific information, including technical drawings, data sheets, user guides and more for each individual product. All items are available for download.

	BCC M425-M415 ...	BCC M425 ...
	M12 female, A-coded/ M12 male, A-coded	M12 female, A-coded/ M12 male, A-coded
	angled/straight	angled/angled
	60 V AC/DC	–
	30 V DC	30 V DC
	4 A	4 A
	IP67, IP68, IP69K/IP67, IP68, IP69K	IP67, IP68, IP69K/IP67, IP68, IP69K
	–	–
	BCC M425-M415-3A-312-PX0534①-_ _ _②	–
	BCC M425-M415-3A-313-PX0534①-_ _ _②	–
	BCC M425-M415-3A-660-PX0534①-_ _ _②	BCC M425-M425-3A-660-PX0534①-_ _ _②
	BCC M425-M415-3A-661-PX0534①-_ _ _②	BCC M425-M425-3A-661-PX0534①-_ _ _②
	–	–
	CE, UL, EAC	CE, UL, EAC
	156	156

①	Material	Color	Number of conductors × conductor cross-section	Cable temperature fixed in place	Cable temperature flexed
UNSHIELDED					
PX0534	PUR		5 × 0.34 mm²	–50...+90 °C	–25...+90 °C
SHIELDED					
PS0534	PUR		5 × 0.34 mm²	–50...+90 °C	–25...+90 °C

②	Cable length
CABLE	
003	0.3 m
006	0.6 m
010	1 m
015	1.5 m
020	2 m
050	5 m

Other cable lengths on request!

AVAILABLE AS BULK CABLE

	Order code	Part number	Cable length
PX0534	BCC0AC9	BCC 0000-0000-00-000-PX0534-10X	100 m

		BCC M418 ...	BCC M418 ...	
Connection		M12 female, A-coded	M12 male, A-coded	
Version		straight	straight	
Rated voltage		30 V AC/DC	30 V AC/DC	
Rated current		2 A	2 A	
Degree of protection	unshielded	IP67, IP68, IP69K	IP67, IP68, IP69K	
	shielded	IP67	–	
unshielded, no LED, junction block wiring		BCC M418-0000-1A-044-PX0825①-_ _ _②	BCC M418-0000-2A-044-PX0825①-_ _ _②	
unshielded, no LED, sensor wiring		BCC M418-0000-1A-069-PX0825①-_ _ _②	–	
shielded, no LED, sensor wiring		BCC M418-0000-1A-046-PS0825①-_ _ _②	–	
Approval/Conformity		CE, UL, EAC	CE, UL, EAC	
For drawing see page		156	156	

M12 female, junction block wiring

PIN 1: white
PIN 2: green
PIN 3: yellow
PIN 4: gray
PIN 5: brown
PIN 6: pink
PIN 7: blue
PIN 8: red

unshielded, no LED

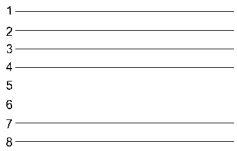

M12 female, sensor wiring

PIN 1: white
PIN 2: brown
PIN 3: green
PIN 4: yellow
PIN 5: gray
PIN 6: pink
PIN 7: blue
PIN 8: red

unshielded, no LED

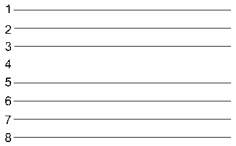

shielded, no LED

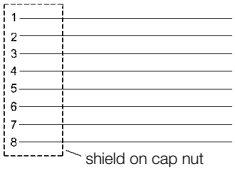

M12 male, junction block wiring

PIN 1: white
PIN 2: green
PIN 3: yellow
PIN 4: gray
PIN 5: brown
PIN 6: pink
PIN 7: blue
PIN 8: red

unshielded, no LED

M12 female/M12 male, junction block wiring

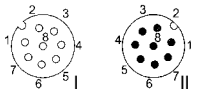

PIN 1: white
PIN 2: green
PIN 3: yellow
PIN 4: gray
PIN 5: brown
PIN 6: pink
PIN 7: blue
PIN 8: red

unshielded, no LED

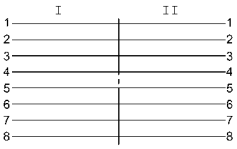

Do you need more details? Our Product Finder at www.balluff.com provides you with product-specific information, including technical drawings, data sheets, user guides and more for each individual product. All items are available for download.

	BCC M428 ...	BCC M428 ...	BCC M418-M418 ...
	M12 female, A-coded	M12 male, A-coded	M12 female, A-coded/ M12 male, A-coded
	angled	angled	straight/straight
	30 V AC/DC	30 V AC/DC	30 V AC/DC
	2 A	2 A	2 A
	IP67, IP68, IP69K	IP67, IP68, IP69K	IP67, IP68, IP69K/IP67, IP68, IP69K
	IP67		
	BCC M428-0000-1A-044-PX0825①-_ _ _②	BCC M428-0000-2A-044-PX0825①-_ _ _②	BCC M418-M418-3A-342-PX0825①-_ _ _②
	BCC M428-0000-1A-069-PX0825①-_ _ _②	–	–
	BCC M428-0000-1A-046-PS0825①-_ _ _②	–	–
	CE, UL, EAC	CE, UL, EAC	CE, UL, EAC
	156, 157	157	157

①	Material	Color	Number of conductors × conductor cross-section	Cable temperature fixed in place	Cable temperature flexed
UNSHIELDED					
PX0825	PUR	Black	8 × 0.25 mm^2	–50...+80 °C	–25...+80 °C
SHIELDED					
PS0825	PUR	Black	8 × 0.25 mm^2	–50...+90 °C	–25...+90 °C

②	Cable length
CONNECTION CABLE	
020	2 m
050	5 m
100	10 m
CABLE	
003	0.3 m
006	0.6 m
010	1 m
015	1.5 m
020	2 m
050	5 m

Other cable lengths on request!

	BCC M41C ...	BCC M41C ...	
Connection	M12 female, A-coded	M12 male, A-coded	
Version	straight	straight	
Rated voltage	30 V AC/DC	30 V AC/DC	
Rated current	1.5 A	1.5 A	
Degree of protection	IP67, IP68, IP69K	IP67, IP68, IP69K	
unshielded, no LED	BCC M41C-0000-1A-049-PX0C25 ①-_ _ _②	BCC M41C-0000-2A-049-PX0C25①-_ _ _②	
Approval/Conformity	CE, UL, EAC	CE, UL, EAC	
For drawing see page	157	157	

M12 female

PIN 1: brown
PIN 2: blue
PIN 3: white
PIN 4: green
PIN 5: pink
PIN 6: yellow
PIN 7: black
PIN 8: gray
PIN 9: red
PIN 10: purple
PIN 11: gray/pink
PIN 12: red/blue

M12 male

PIN 1: brown
PIN 2: blue
PIN 3: white
PIN 4: green
PIN 5: pink
PIN 6: yellow
PIN 7: black
PIN 8: gray
PIN 9: red
PIN 10: purple
PIN 11: gray/pink
PIN 12: red/blue

M12 female/M12 male

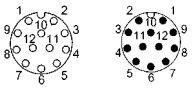

PIN 1: brown
PIN 2: blue
PIN 3: white
PIN 4: green
PIN 5: pink
PIN 6: yellow
PIN 7: black
PIN 8: gray
PIN 9: red
PIN 10: purple
PIN 11: gray/pink
PIN 12: red/blue

unshielded, no LED

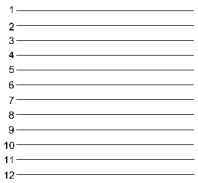

unshielded, no LED

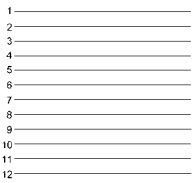

unshielded, no LED

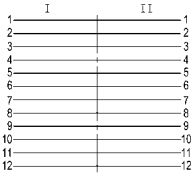

Do you need more details? Our Product Finder at www.balluff.com provides you with product-specific information, including technical drawings, data sheets, user guides and more for each individual product. All items are available for download.

	BCC M42C ...	BCC M42C ...	BCC M41C-M41C ...
	M12 female, A-coded	M12 male, A-coded	M12 female, A-coded/ M12 male, A-coded
	angled	angled	straight/straight
	30 V AC/DC	30 V AC/DC	30 V AC/DC
	1.5 A	1.5 A	1.5 A
	IP67, IP68, IP69K	IP67, IP68, IP69K	IP67, IP68, IP69K/IP67, IP68, IP69K
	BCC M42C-0000-1A-049-PX0C25①-_ _ _②	BCC M42C-0000-2A-049-PX0C25①-_ _ _②	BCC M41C-M41C-3A-325-PX0C25①-_ _ _②
	CE, UL, EAC	CE, UL, EAC	CE, UL, EAC
	158	157	157

①	Material	Color	Number of conductors × conductor cross-section	Cable temperature fixed in place	Cable temperature flexed
UNSHIELDED					
PX0C25	PUR	Black	12 × 0.25 mm^2	–50...+80 °C	–25...+80 °C

②	Cable length
CONNECTION CABLE	
020	2 m
050	5 m
100	10 m
CABLE	
003	0.3 m
006	0.6 m
010	1 m
020	2 m
050	5 m

Other cable lengths on request!

Connection	
Version	
Rated voltage	
Rated current	
Degree of protection	
unshielded, no LED, 3-conductor, N.O. signal	
unshielded, no LED, 4-conductor	
Approval/Conformity	
For drawing see page	

M12 female, 3-conductor, N.O. signal

PIN 1: brown
PIN 3: blue
PIN 4: black

unshielded, no LED

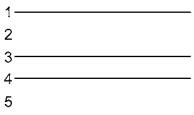

M12 female, 4-conductor

PIN 1: brown
PIN 2: white
PIN 3: blue
PIN 4: black

unshielded, no LED

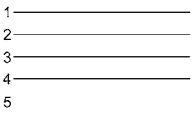

	BCC M415 ...	BCC M425 ...
	M12 female, A-coded	M12 female, A-coded
	straight	angled
	250 V AC/DC	250 V AC/DC
	4 A	4 A
	IP67, IP68, IP69K	IP67, IP68, IP69K
	BCC M415-0000-1A-001-PH0334①-_ _ _②	BCC M425-0000-1A-001-PH0334①-_ _ _②
	BCC M415-0000-1A-003-PH0434①-_ _ _②	BCC M425-0000-1A-003-PH0434①-_ _ _②
	CE, UL, EAC	CE, UL, EAC
	158	158

①	Material	Color	Number of conductors × conductor cross-section	Cable temperature fixed in place	Cable temperature flexed
UNSHIELDED					
PH0334	PUR	Black	3 × 0.34 mm²	–40...+120 °C	
PH0434	PUR	Black	4 × 0.34 mm²	–40...+120 °C	

②	Cable length
CONNECTION CABLE	
020	2 m
050	5 m
100	10 m

Other cable lengths on request!

AVAILABLE AS BULK CABLE

	Order code	Part number	Cable length
PH0434	BCC0H6E	BCC 0000-0000-00-000-PH0434-10X	100 m

		BCC M313 ... BCC M314 ...
Connection		M8 female, A-coded
Version		straight
Rated voltage	No LED	60 V AC/DC
	with LED	–
Rated current		4 A
Degree of protection		IP67, IP69K
unshielded, no LED, 3-conductor		BCC M313-0000-10-001-PW3334①-_ _ _②
unshielded, no LED, 3-conductor, N.O. signal		–
unshielded, 2 × PNP-LED, 3-conductor, N.O. signal		–
unshielded, no LED, 4-conductor		BCC M314-0000-10-003-PW3434①-_ _ _②
unshielded, 3 × PNP-LED, 4-conductor		–
unshielded, 3 × PNP-LED, 5-conductor, with PE		–
Approval/Conformity		CE, EAC
For drawing see page		158

M8 female, 3-conductor

PIN 1: brown
PIN 3: blue
PIN 4: black

unshielded, no LED

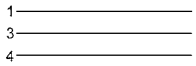

M8 female, 4-conductor

PIN 1: brown
PIN 2: white
PIN 3: blue
PIN 4: black

unshielded, no LED

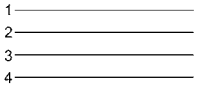

M12 female, 3-conductor, N.O. signal

PIN 1: brown
PIN 3: blue
PIN 4: black

unshielded, no LED

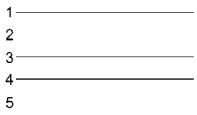

unshielded, 2 × PNP-LED

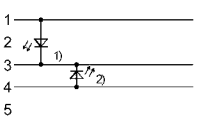

* [1] LED green = Power
[2] LED yellow = Function
[3] LED red = Function

M12 female, 4-conductor

PIN 1: brown
PIN 2: white
PIN 3: blue
PIN 4: black

unshielded, no LED

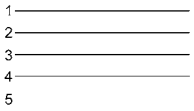

unshielded, 3 × PNP-LED

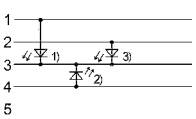

M12 female, 5-conductor, with PE

PIN 1: brown
PIN 2: white
PIN 3: blue
PIN 4: black
PIN 5: green/yellow

unshielded, 3 × PNP-LED

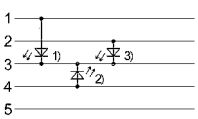

	BCC M323 ... BCC M324 ...	BCC M415 ...	BCC M425 ...
	M8 female, A-coded	M12 female, A-coded	M12 female, A-coded
	angled	straight	angled
	60 V AC/DC	250 V AC/DC	250 V AC/DC
	–	–	30 V DC
	4 A	4 A	4 A
	IP67, IP69K	IP67, IP68, IP69K	IP67, IP68, IP69K
	BCC M323-0000-10-001-PW3334①-_ _ _②	–	–
	–	–	BCC M425-0000-1A-001-PW3334①-_ _ _②
	–	–	BCC M425-0000-1A-004-PW3334①-_ _ _②
	BCC M324-0000-10-003-PW3434①-_ _ _②	BCC M415-0000-1A-003-PW3434①-_ _ _②	BCC M425-0000-1A-003-PW3434①-_ _ _②
	–	–	BCC M425-0000-1A-099-PW3434①-_ _ _②
	–	–	BCC M425-0000-1A-100-PW3534①-_ _ _②
	CE, EAC	CE, UL, EAC	CE, UL, EAC
	158	158	158

①	Material	Color	Number of conductors × conductor cross-section	Cable temperature fixed in place	Cable temperature flexed
UNSHIELDED					
PW3334	PUR	Orange	3 × 0.34 mm²	–50...+90 °C	–25...+90 °C
PW3434	PUR	Orange	4 × 0.34 mm²	–50...+90 °C	–25...+90 °C
PW3534	PUR	Orange	5 × 0.34 mm²	–50...+90 °C	–25...+90 °C

②	Cable length
CONNECTION CABLE	
020	2 m
050	5 m
100	10 m

Other cable lengths on request!

AVAILABLE AS BULK CABLE

	Order code	Part number	Cable length
PW3334	BCC0C1A	BCC 0000-0000-00-000-PW3334-10X	100 m
PW3434	BCC0C19	BCC 0000-0000-00-000-PW3434-10X	100 m
PW3534	BCC0C1F	BCC 0000-0000-00-003-PW3534-10X	100 m

		BCC M323-M413 ...
Connection		M8 female, A-coded/ M12 male, A-coded
Version		angled/straight
Rated voltage	No LED	–
	with LED	30 V DC
Rated current		4 A
Degree of protection		IP67, IP69K/IP67, IP68, IP69K
unshielded, 2 × PNP-LED, 3-conductor		BCC M323-M413-3E-602-PW3334①-_ _ _②
unshielded, 2 × PNP-LED, 3-conductor, N.O. signal		–
unshielded, no LED, 4-conductor		–
unshielded, 3 × PNP-LED, 4-conductor		–
unshielded, no LED, 5-conductor, with PE		–
unshielded, 3 × PNP-LED, 5-conductor, with PE		–
Approval/Conformity		CE, EAC
For drawing see page		159

M8 female/M12 male, 3-conductor

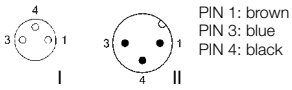

M12 female/M12 male, 3-conductor, N.O. signal

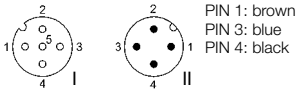

M12 female/M12 male, 4-wire

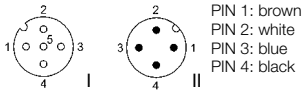

M12 female/M12 male, 5-conductor, with PE

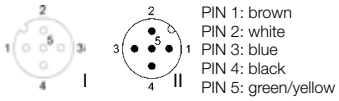

unshielded, no LED

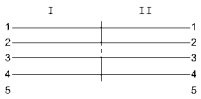

unshielded, no LED

unshielded, 2 × PNP-LED*

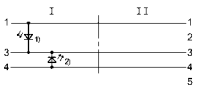

unshielded, 2 × PNP-LED*

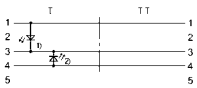

unshielded, 3 × PNP-LED*

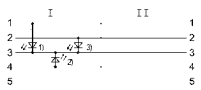

unshielded, 3 × PNP-LED*

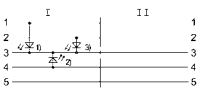

* 1) LED green = Power
2) LED yellow = Function
3) LED red = Function

	BCC M415-M414... BCC M415-M415...	BCC M425-M413... BCC M425-M414... BCC M425-M415...
	M12 female, A-coded/ M12 male, A-coded	M12 female, A-coded/ M12 male, A-coded
	straight/straight	angled/straight
	250 V AC/DC	250 V AC/DC
	30 V DC	30 V DC
	4 A	4 A
	IP67, IP68, IP69K/IP67, IP68, IP69K	IP67, IP68, IP69K/IP67, IP68, IP69K
	–	–
	–	BCC M425-M413-3A-602-PW3334①-_ _ _②
	BCC M415-M414-3A-304-PW3434①-_ _ _②	BCC M425-M414-3A-304-PW3434①-_ _ _②
		BCC M425-M414-3A-691-PW3434①-_ _ _②
	BCC M415-M415-3A-313-PW3534①-_ _ _②	BCC M425-M415-3A-313-PW3534①-_ _ _②
	–	BCC M425-M415-3A-692-PW3534①-_ _ _②
	CE, UL, EAC	CE, UL, EAC
	159	159

①	Material	Color	Number of conductors × conductor cross-section	Cable temperature fixed in place	Cable temperature flexed
UNSHIELDED					
PW3334	PUR	Orange	3 × 0.34 mm²	–50...+90 °C	–25...+90 °C
PW3434	PUR	Orange	4 × 0.34 mm²	–50...+90 °C	–25...+90 °C
PW3534	PUR	Orange	5 × 0.34 mm²	–50...+90 °C	–25...+90 °C

②	Cable length
CABLE	
003	0.3 m
006	0.6 m
010	1 m
015	1.5 m
020	2 m
050	5 m

Other cable lengths on request!

AVAILABLE AS BULK CABLE

	Order code	Part number	Cable length
PW3334	BCC0C1A	BCC 0000-0000-00-000-PW3334-10X	100 m
PW3434	BCC0C19	BCC 0000-0000-00-000-PW3434-10X	100 m
PW3534	BCC0C1F	BCC 0000-0000-00-003-PW3534-10X	100 m

	BCC W313 ... BCC W314 ...	
Connection	M8 female, A-coded	
Version	straight	
Rated voltage	60 V AC/DC	
Rated current	4 A	
Degree of protection	IP65	
unshielded, no LED, 3-conductor	BCC W313-0000-10-001-BW8334①-_ _ _②	
unshielded, no LED, 4-conductor	BCC W314-0000-10-003-BW8434①-_ _ _②	
Approval/Conformity	CE, UL, EAC	
For drawing see page	159	

M8 female, 3-conductor

PIN 1: brown
PIN 3: blue
PIN 4: black

unshielded, no LED

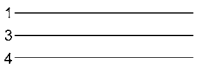

M8 female, 4-conductor

PIN 1: brown
PIN 2: white
PIN 3: blue
PIN 4: black

unshielded, no LED

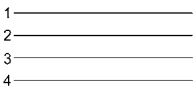

M12 female, 4-conductor

PIN 1: brown
PIN 2: white
PIN 3: blue
PIN 4: black

unshielded, no LED

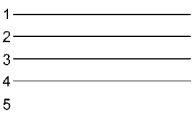

Do you need more details? Our Product Finder at www.balluff.com provides you with product-specific information, including technical drawings, data sheets, user guides and more for each individual product. All items are available for download.

	BCC W323 ... BCC W324 ...	BCC W415 ...	BCC W425 ...
	M8 female, A-coded	M12 female, A-coded	M12 female, A-coded
	angled	straight	angled
	60 V AC/DC	250 V AC/DC	250 V AC/DC
	4 A	4 A	4 A
	IP65	IP65	IP65
	BCC W323-0000-10-001-BW8334①-_ _ _②	–	–
	BCC W324-0000-10-003-BW8434①-_ _ _②	BCC W415-0000-1A-003-BW8434①-_ _ _②	BCC W425-0000-1A-003-BW8434①-_ _ _②
	CE, UL, EAC	CE, UL, EAC	CE, UL, EAC
	159	159	159

①	Material	Color	Number of conductors × conductor cross-section	Cable temperature fixed in place	Cable temperature flexed
UNSHIELDED					
BW8334	TPE	Gray	3 × 0.34 mm²	–50...+130 °C	–40...+125 °C
BW8434	TPE	Gray	4 × 0.34 mm²	–50...+130 °C	–40...+125 °C

②	Cable length
CONNECTION CABLE	
020	2 m
050	5 m

Other cable lengths on request!

	BCC W313-W313 ...	
Connection	M8 female, A-coded/ M8 male, A-coded	
Version	straight/straight	
Rated voltage	60 V AC/DC	
Rated current	4 A	
Degree of protection	IP65/IP65	
unshielded, no LED, 3-conductor	BCC W313-W313-30-300-BW8334①-_ _ _②	
unshielded, no LED, 4-conductor	–	
Approval/Conformity	CE, UL, EAC	
For drawing see page	159	

M8 female/M8 male, 3-wire

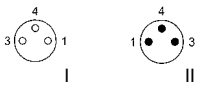

PIN 1: brown
PIN 3: blue
PIN 4: black

M12 female/M12 male, 4-wire

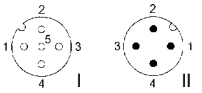

PIN 1: brown
PIN 2: white
PIN 3: blue
PIN 4: black

unshielded, no LED

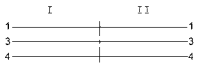

unshielded, no LED

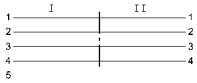

Do you need more details? Our Product Finder at www.balluff.com provides you with product-specific information, including technical drawings, data sheets, user guides and more for each individual product. All items are available for download.

	BCC W415-W414 ...	BCC W425-W414 ...
	M12 female, A-coded/ M12 male, A-coded	M12 female, A-coded/ M12 male, A-coded
	straight/straight	angled/straight
	250 V AC/DC	250 V AC/DC
	4 A	4 A
	IP65/IP65	IP65/IP65
	–	–
	BCC W415-W414-3A-304-BW8434①-_ _ _②	BCC W425-W414-3A-304-BW8434①-_ _ _②
	CE, UL, EAC	CE, UL, EAC
	159	159

①	Material	Color	Number of conductors × conductor cross-section	Cable temperature fixed in place	Cable temperature flexed
UNSHIELDED					
BW8334	TPE	Gray	3 × 0.34 mm²	–50...+130 °C	–40...+125 °C
BW8434	TPE	Gray	4 × 0.34 mm²	–50...+130 °C	–40...+125 °C

②	Cable length
CABLE	
003	0.3 m
006	0.6 m
010	1 m
015	1.5 m
020	2 m
050	5 m

Other cable lengths on request!

	BCC W415 ...	
Connection	M12 female, A-coded	
Version	straight	
Rated voltage	250 V AC/DC	
Rated current	4 A	
Degree of protection	IP65	
unshielded, no LED	BCC W415-0000-1A-003-SW0434①-_ _ _②	
unshielded, 3 × PNP-LED	–	
Approval/Conformity	CE, UL, EAC	
For drawing see page	160	

M12 female

PIN 1: brown
PIN 2: white
PIN 3: blue
PIN 4: black

M12 female/M12 male

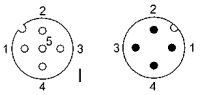

PIN 1: brown
PIN 2: white
PIN 3: blue
PIN 4: black

unshielded, no LED

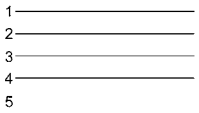

unshielded, no LED

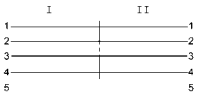

unshielded, 3 × PNP-LED

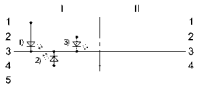

* 1) LED green = Power
2) LED yellow = Function
3) LED red = Function

Do you need more details? Our Product Finder at www.balluff.com provides you with product-specific information, including technical drawings, data sheets, user guides and more for each individual product. All items are available for download.

	BCC W425 ...	BCC W415 ... BCC W414 ...	BCC W425 ... BCC W414 ...
	M12 female, A-coded	M12 female, A-coded/ M12 male, A-coded	M12 female, A-coded/ M12, A-coded, male
	angled	straight/straight	angled/straight
	250 V AC/DC	250 V AC/DC	250 V AC/DC
	4 A	4 A	4 A
	IP65	IP65/IP65	IP65/IP65
	BCC W425-0000-1A-003-SW0434①-_ _ _②	BCC W415-W414-3A-304-SW0434①-_ _ _②	BCC W425-W414-3A-304-SW0434①-_ _ _②
	–	BCC W415-W414-3A-650-SW0434①-_ _ _②	BCC W425-W414-3A-650-SW0434①-_ _ _②
	CE, UL, EAC	CE, UL, EAC	CE, UL, EAC
	160	160	160

①	Material	Color	Number of conductors × conductor cross-section	Cable temperature fixed in place	Cable temperature flexed
UNSHIELDED					
SW0434	Silicone	Black	4 × 0.34 mm²	–40...+200 °C	–25...+200 °C

②	Cable length
CONNECTION CABLE	
020	2 m
050	5 m
100	10 m
CABLE	
003	0.3 m
006	0.6 m
010	1 m
015	1.5 m
020	2 m
050	5 m

Other cable lengths on request!

AVAILABLE AS BULK CABLE

	Order code	Part number	Cable length
SW0434	BCC0HA8	BCC 0000-0000-00-003-SW0434-10X	100 m

		BCC W313 ... BCC W314 ...
Connection		M8 female, A-coded
Version		straight
Rated voltage	No LED	60 V AC/DC
Rated current		4 A
Degree of protection	unshielded	IP65
unshielded, no LED, 3-conductor		BCC W313-0000-10-001-TW0334①-_ _ _②
unshielded, no LED, 4-conductor		BCC W314-0000-10-003-TW0434①-_ _ _②
Approval/Conformity		CE, UL, EAC
For drawing see page		160

M8 female, 3-conductor

PIN 1: brown
PIN 3: blue
PIN 4: black

unshielded, no LED

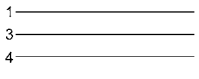

M8 female, 4-conductor

PIN 1: brown
PIN 2: white
PIN 3: blue
PIN 4: black

unshielded, no LED

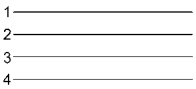

M12 female, 4-conductor

PIN 1: brown
PIN 2: white
PIN 3: blue
PIN 4: black

unshielded, no LED

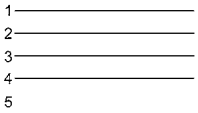

Do you need more details? Our Product Finder at www.balluff.com provides you with product-specific information, including technical drawings, data sheets, user guides and more for each individual product. All items are available for download.

	BCC W323 ... BCC W324 ...	BCC W415 ...	BCC W425 ...
	M8 female, A-coded	M12 female, A-coded	M12 female, A-coded
	angled	straight	angled
	60 V AC/DC	250 V AC/DC	250 V AC/DC
	4 A	4 A	4 A
	IP65	IP65	IP65
	BCC W323-0000-10-001-TW0334①-_ _ _②	–	–
	BCC W324-0000-10-003-TW0434①-_ _ _②	BCC W415-0000-1A-003-TW0434①-_ _ _②	BCC W425-0000-1A-003-TW0434①-_ _ _②
	CE, UL, EAC	CE, UL, EAC	CE, UL, EAC
	161	161	161

①	Material	Color	Number of conductors × conductor cross-section	Cable temperature fixed in place	Cable temperature flexed
UNSHIELDED					
TW0334	FEP	Black	3 × 0.34 mm²	–100...+200 °C	–
TW0434	FEP	Black	4 × 0.34 mm²	–100...+200 °C	–

②	Cable length
CONNECTION CABLE	
020	2 m
050	5 m
100	10 m

Other cable lengths on request!

		BCC W313-W313 ...
Connection		M8 female, A-coded/ M8 male, A-coded
Version		straight/straight
Rated voltage	No LED	60 V AC/DC
	with LED	–
Rated current		4 A
Degree of protection	unshielded	IP65/IP65
unshielded, no LED, 3-conductor		BCC W313-W313-30-300-TW0334①-_ _ _②
unshielded, no LED, 4-conductor		–
unshielded, 3 × PNP-LED, 4-conductor		–
Approval/Conformity		CE, UL, EAC
For drawing see page		161

M8 female/M8 male, 3-wire

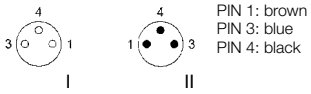

PIN 1: brown
PIN 3: blue
PIN 4: black

M12 female/M12 male, 4-wire

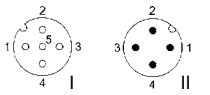

PIN 1: brown
PIN 2: white
PIN 3: blue
PIN 4: black

unshielded, no LED

unshielded, no LED

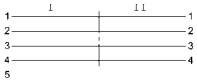

unshielded, 3 × PNP-LED

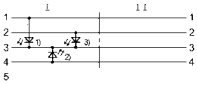

* [1] LED green = Power
[2] LED yellow = Function
[3] LED white = Function

Do you need more details? Our Product Finder at www.balluff.com provides you with product-specific information, including technical drawings, data sheets, user guides and more for each individual product. All items are available for download.

	BCC W415-W414 ...	BCC W425-W414 ...
	M12 female, A-coded/ M12 male, A-coded	M12 female, A-coded/ M12 male, A-coded
	straight/straight	angled/straight
	250 V AC/DC	250 V AC/DC
	30 V DC	30 V DC
	4 A	4 A
	IP65/IP65	IP65/IP65
	–	–
	BCC W415-W414-3A-304-TW0434①-_ _ _②	BCC W425-W414-3A-304-TW0434①-_ _ _②
	BCC W415-W414-3A-650-TW0434①-_ _ _②	BCC W425-W414-3A-650-TW0434①-_ _ _②
	CE, UL, EAC	CE, UL, EAC
	161	161

①	Material	Color	Number of conductors × conductor cross-section	Cable temperature fixed in place	Cable temperature flexed
UNSHIELDED					
TW0334	FEP	Black	3 × 0.34 mm²	–100...+200 °C	–
TW0434	FEP	Black	4 × 0.34 mm²	–100...+200 °C	–

②	Cable length
CABLE	
003	0.3 m
006	0.6 m
010	1 m
015	1.5 m
020	2 m
050	5 m

Other cable lengths on request!

		BCC W313 ... BCC W314 ...
Connection		M8 female, A-coded
Version		straight
Rated voltage	No LED	60 V AC/DC
Rated current		4 A
Degree of protection	unshielded	IP65
unshielded, no LED, 3-conductor		BCC W313-0000-10-001-MW8334①-_ _ _②
unshielded, no LED, 4-conductor		BCC W314-0000-10-003-MW8434①-_ _ _②
Approval/Conformity		CE, UL, EAC
For drawing see page		161, 162

M8 female, 3-conductor

PIN 1: brown
PIN 3: blue
PIN 4: black

unshielded, no LED

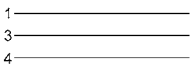

M8 female, 4-conductor

PIN 1: brown
PIN 2: white
PIN 3: blue
PIN 4: black

unshielded, no LED

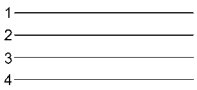

M12 female, 4-conductor

PIN 1: brown
PIN 2: white
PIN 3: blue
PIN 4: black

unshielded, no LED

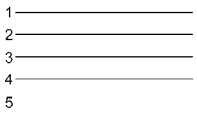

	BCC W323 ... BCC W324 ...	BCC W415 ...	BCC W425 ...
	M8 female, A-coded	M12 female, A-coded	M12 female, A-coded
	angled	straight	angled
	60 V AC/DC	250 V AC/DC	250 V AC/DC
	4 A	4 A	4 A
	IP65	IP65	IP65
	BCC W323-0000-10-001-MW8334①-_ _ _②	–	–
	BCC W324-0000-10-003-MW8434①-_ _ _②	BCC W415-0000-1A-003-MW8434①-_ _ _②	BCC W425-0000-1A-003-MW8434①-_ _ _②
	CE, UL, EAC	CE, UL, EAC	CE, UL, EAC
	162	162	162

①	Material	Color	Number of conductors × conductor cross-section	Cable temperature fixed in place	Cable temperature flexed
UNSHIELDED					
MW8334	V2A, metal braided	–	3 × 0.34 mm^2	–50...+90 °C	–25...+90 °C
MW8434	V2A, metal braided	–	4 × 0.34 mm^2	–50...+90 °C	–25...+90 °C

②	Cable length
CONNECTION CABLE	
006	0.6 m
010	1 m
020	2 m
050	5 m

Other cable lengths on request!

		BCC W313-W313 ...	
Connection		M8 female, A-coded/ M8 male, A-coded	
Version		straight/straight	
Rated voltage	No LED	60 V AC/DC	
Rated current		4 A	
Degree of protection	unshielded	IP65/IP65	
unshielded, no LED, 3-conductor		BCC W313-W313-30-300-MW8334①-_ _ _②	
unshielded, no LED, 4-conductor		–	
Approval/Conformity		CE, UL, EAC	
For drawing see page		162	

M8 female/M8 male, 3-wire

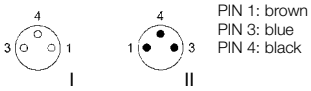

PIN 1: brown
PIN 3: blue
PIN 4: black

M12 female/M12 male, 4-wire

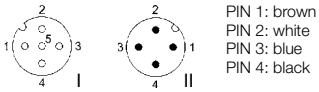

PIN 1: brown
PIN 2: white
PIN 3: blue
PIN 4: black

unshielded, no LED

unshielded, no LED

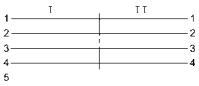

	BCC W323-W313 ...	BCC W415-W414 ...	BCC W425-W414 ...
	M8 female, A-coded/ M8 male, A-coded	M12 female, A-coded/ M12 male, A-coded	M12 female, A-coded/ M12 male, A-coded
	angled/straight	straight/straight	angled/straight
	60 V AC/DC	250 V AC/DC	250 V AC/DC
	4 A	4 A	4 A
	IP65/IP65	IP65/IP65	IP65/IP65
	BCC W323-W313-30-300-MW8334①-_ _ _②	–	–
	–	BCC W415-W414-3A-304-MW8434①-_ _ _②	BCC W425-W414-3A-304-MW8434①-_ _ _②
	CE, UL, EAC	CE, UL, EAC	CE, UL, EAC
	162	162	162

①	Material	Color	Number of conductors × conductor cross-section	Cable temperature fixed in place	Cable temperature flexed
UNSHIELDED					
MW8334	V2A, metal braided	–	3 × 0.34 mm²	–50...+90 °C	–25...+90 °C
MW8434	V2A, metal braided	–	4 × 0.34 mm²	–50...+90 °C	–25...+90 °C

②	Cable length
CABLE	
003	0.3 m
006	0.6 m
010	1 m
015	1.5 m
020	2 m
050	5 m

Other cable lengths on request!

	BCC S4B5 ...	
Connection	M12x1 female, A-coded	
Version	straight	
Rated voltage	250 V AC/DC	
Rated current	4 A	
Degree of protection	IP67, IP69K	
unshielded, no LED 4-conductor	BCC S4B5-0000-1A-003-YX8434-_ _ _①-C009	
unshielded, no LED 5-conductor no PE		
unshielded, no LED 5-conductor with PE		
Approval/Conformity	CE, EAC, ECOLAB, WEEE	
For drawing see page	164	

M12 female, 4-conductor

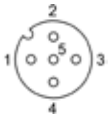

PIN 1: brown
PIN 2: white
PIN 3: blue
PIN 4: black

unshielded, no LED

M12 female, 5-conductor, no PE

PIN 1: brown
PIN 2: white
PIN 3: blue
PIN 4: black
PIN 5: grey

unshielded, no LED

M12 female, 5-conductor with PE

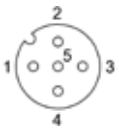

PIN 1: brown
PIN 2: white
PIN 3: blue
PIN 4: black
PIN 5: green/yellow

Do you need more details? Our Product Finder at www.balluff.com provides you with product-specific information, including technical drawings, data sheets, user guides and more for each individual product. All items are available for download.

	BCC S4C5 ...	BCC S4B5 ...	BCC S4C5 ...
	M12x1 female, A-coded	M12x1 female, A-coded	M12x1 female, A-coded
	angled	straight	angled
	250 V AC/DC	250 V AC/DC	250 VDC / 250 VAC
	4 A	4 A	4 A
	IP67, IP69K	IP67, IP69K	IP67, IP69K
	BCC S4C5-0000-1A-003-YX8434-_ _ _①-C00		
		BCC S4B5-0000-1A-017-YX8534-_ _ _①-C009	BCC S4C5-0000-1A-017-YX8534-_ _ _①-C009
		BCC S4B5-0000-1A-034-YX8534-_ _ _①-C009	
	CE, EAC, ECOLAB, WEEE	CE, EAC, ECOLAB, WEEE	CE, EAC, ECOLAB, WEEE
	164	164	164

	Material	Color	Number of conductors × conductor cross-section	Cable temperature fixed in place	Cable temperature fiexed
UNSHIELDED					
YX8434	TPE-V	grey	4 × 0.34 mm²	–50...+105 °C	–25...+105 °C
YX8435	TPE-V	grey	5 × 0.34 mm²	–50...+105 °C	–25...+105 °C

①	Cable length
CONNECTION CABLE	
020	2 m
050	5 m
100	10 m
150	15 m
200	20 m

Other cable lengths on request!

	BCC S4B8 ...	
Connection	M12x1 female, A-coded	
Version	straight	
Rated voltage	30 V AC/DC	
Rated current	2 A	
Degree of protection	IP67, IP69K	
Unshielded, no LED 4-conductor		
Unshielded, no LED 5-conductor mit PE		
Unshielded, no LED 8-conductor	BCC S4B8-0000-1A-045-YX8825-_ _ _①-C009	
Approval/Conformity	CE, EAC, ECOLAB, WEEE	
For drawing see page	164	

M12 female

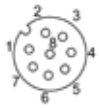

M12 female/M12 male, 4-conductor

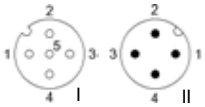

PIN 1: brown
PIN 2: white
PIN 3: blue
PIN 4: black

Unshielded. no LED 8-conductor

M12 female/M12 male, 5-conductor with PE

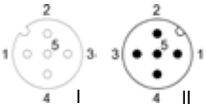

PIN 1: brown
PIN 2: white
PIN 3: blue
PIN 4: black
PIN 5: grün/gelb

Unshielded. no LED 4-conductor

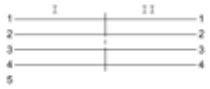

M12 female/M12-Stecke, 8-conductor

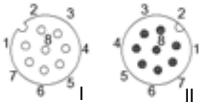

PIN 1: brown
PIN 2: white
PIN 3: blue
PIN 4: black
PIN 5: grey
PIN 6: pink
PIN 7: violett
PIN 8: orange

Unshielded, no LED 5-conductor mit PE

Unshielded, no LED 8-conductor

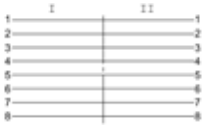

Do you need more details? Our Product Finder at www.balluff.com provides you with product-specific information, including technical drawings, data sheets, user guides and more for each individual product. All items are available for download.

	BCC S4B5 - S4B4 ...	BCC S4B5 - S4B5 ...	BCC S4B8 - S4B8 ...
	M12, A female, A-coded M12, A male, A-coded	M12, A female, A-coded M12, A male, A-coded	M12, A female, A-coded M12, A male, A-coded
	straight/straight	straight/straight	straight/straight
	250 V AC/DC	60 V AC/DC	30 V AC/DC
	4 A	4 A	2 A
	IP67, IP69K	IP67, IP69K	IP67, IP69K
	BCC S4B5-S4B4-3A-304-YX8434-_ _ _①-C009		
		BCC S4B5-S4B5-3A-313-YX8534-_ _ _①-C009	
			BCC S4B8-S4B8-3A-321-YX8825-_ _ _①-C009
	CE, EAC, ECOLAB, WEEE	CE, EAC, ECOLAB, WEEE	CE, EAC, ECOLAB, WEEE
	164	164	164

	Material	Color	Number of conductors × conductor cross-section	Cable temperature fixed in place	Cable temperature fiexed
UNSHIELDED					
YX8434	TPE-V	grey	4 × 0.34 mm²	–50...+105 °C	–25...+105 °C
YX8534	TPE-V	grey	5 × 0.34 mm²	–50...+105 °C	–25...+105 °C
YX8825	TPE-V	grey	8 × 0,25 mm²	–50...+105 °C	–25...+105 °C

①	Cable length
CONNECTION CABLE	
020	2 m
050	5 m
100	10 m
150	15 m
CABLE	
0.6	0.6 m
020	2 m
050	5 m
100	10 m
150	15 m

Other cable lengths on request!

	BCC M414 ...	
Connection	M12x1 female, L-coded	
Version	straight	
Rated voltage	50 V DC / 60 V AC	
Rated current	16 A	
Degree of protection	IP65, IP67, IP69k	
unshielded no FE	BCC M414-0000-1L-003-PX04A5-_ _ _①	
Approval/Conformity	UL,CE, EAC, WEEE	
For drawing see page	168	

M12 female no FE

PIN 1: brown
PIN 2: white
PIN 3: blue
PIN 4: black

M12 male no FE

PIN 1: brown
PIN 2: white
PIN 3: blue
PIN 4: black

unshielded no FE

Do you need more details? Our Product Finder at www.balluff.com provides you with product-specific information, including technical drawings, data sheets, user guides and more for each individual product. All items are available for download.

	BCC M424 ...	BCC M415 ...	BCC M425 ...
	M12x1 female, L-coded	M12x1 male, L-coded	M12x1 male, L-coded
	angled	Sstraight	angled
	50 V DC / 60 V AC	50 V DC / 60 V AC	50 V DC / 60 V AC
	16 A	16 A	16 A
	IP65, IP67, IP69k	IP65, IP67, IP69k	IP65, IP67, IP69k
	BCC M424-0000-1L-003-PX04A5-_ _ _①	BCC M415-0000-2L-003-PX04A5-_ _ _①	BCC M425-0000-2L-003-PX04A5-_ _ _①
	UL, CE, EAC, WEEE	UL, CE, EAC, WEEE	UL, CE, EAC, WEEE
	168	168	168

	Material	Color	Number of conductors × conductor cross-section	Cable temperature fixed in place	Cable temperature fiexed
UNSHIELDED					
PX04A5	PUR	black	4 × 1.5 mm^2	–50...+80 °C	–20...+80 °C

①	Cable length
CONNECTION CABLE	
020	2 m
050	5 m
100	10 m

Other cable lengths on request!

AVAILABLE AS BULK CABLE

	Order code	Part number	Cable length
PX04A5	BCC0ACF	BCC 0000-0000-00-000-PX04A5-10X	100 m

	BCC M415 ...	
Connection	M12x1 female, L-coded	
Version	straight	
Rated voltage	50 V DC / 60 V AC	
Rated current	16 A	
Degree of protection	IP65, IP67, IP69k	
unshielded with FE	BCC M415-0000-1L-150-PX85A5-5-_ _ _①	
Approval/Conformity	UL, CE, EAC, WEEE	
For drawing see page	168	

M12 female with FE

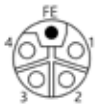

PIN 1: brown
PIN 2: white
PIN 3: blue
PIN 4: black
PIN 5: pink

M12 male with FE

PIN 1: brown
PIN 2: white
PIN 3: blue
PIN 4: black
PIN 5: pink

unshielded with FE

Do you need more details? Our Product Finder at www.balluff.com provides you with product-specific information, including technical drawings, data sheets, user guides and more for each individual product. All items are available for download.

	BCC M425 ...	BCC M415 ...	BCC M425 ...
	M12x1 female, L-coded	M12x1 male, L-coded	M12x1 male, L-coded
	angled	straight	angled
	50 V DC / 60 V AC	50 V DC / 60 V AC	50 V DC / 60 V AC
	16 A	16 A	16 A
	IP65, IP67, IP69k	IP65, IP67, IP69k	IP65, IP67, IP69k
	BCC M425-0000-1L-150-PX85A5-_ _ _①	BCC M415-0000-2L-150-PX85A5-_ _ _①	BCC M425-0000-2L-150-PX85A5-_ _ _①
	UL, CE, EAC, WEEE	UL, CE, EAC, WEEE	UL, CE, EAC, WEEE
	168	168	168

	Material	Color	Number of conductors × conductor cross-section	Cable temperature fixed in place	Cable temperature fiexed
UNSHIELDED					
PX85A5	PUR	grey	5 × 1.5 mm^2	–50...+80 °C	–20...+80 °C

①	Cable length
CONNECTION CABLE	
020	2 m
050	5 m
100	10 m

Other cable lengths on request!

	BCC M414-M415 ...	
Connection	M12x1 female, L-coded M12x1 male, L-coded	
Version	straight/straight	
Rated voltage	50 V DC / 60 V AC	
Rated current	16 A	
Degree of protection	IP65, IP67, IP69k	
unshielded no FE	BCC M414-M415-3L-304-PX04A5-_ _ _①	
Approval/Conformity	UL, CE, EAC, WEEE	
For drawing see page	169	

M12 female/M12 male no FE

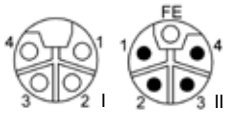

unshielded no FE

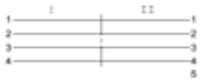

Do you need more details? Our Product Finder at www.balluff.com provides you with product-specific information, including technical drawings, data sheets, user guides and more for each individual product. All items are available for download.

BCC M424-M425 ...		
M12x1 female, L-coded M12x1 male, L-coded		
angled/angled		
50 V DC / 60 V AC		
16 A		
IP65, IP67, IP69k		
BCC M424-M425-3L-304-PX04A5-_ _ _①		
UL, CE, EAC, WEEE		
169		

	Material	Color	Number of conductors × conductor cross-section	Cable temperature fixed in place	Cable temperature fiexed
UNSHIELDED					
PX04A5	PUR	black	4 × 1.5 mm²	–50...+80 °C	–20...+80 °C

①	Cable length
CONNECTION CABLE	
006	0.6 m
020	2 m
050	5 m
100	10 m
150	15 m

Other cable lengths on request!

AVAILABLE AS BULK CABLE

	Order code	Part number	Cable length
PX04A5	BCC0ACF	BCC 0000-0000-00-000-PX04A5-10X	100 m

	BCC M415-5M415 ...	
Connection	M12x1 female, L-coded M12x1 male, L-coded	
Version	straight/straight	
Rated voltage	50 V DC / 60 V AC	
Rated current	16 A	
Degree of protection	IP65, IP67, IP69k	
Unshielded with FE	BCC M415-M415-3L-386-PX85A5-_ _ _①	
Approval/Conformity	UL, CE, EAC, WEEE	
For drawing see page	169	

M12 female/M12 male

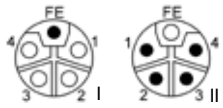

PIN 1: brown
PIN 2: white
PIN 3: blue
PIN 4: black
PIN 5: pink

unshielded with FE

Do you need more details? Our Product Finder at www.balluff.com provides you with product-specific information, including technical drawings, data sheets, user guides and more for each individual product. All items are available for download.

	BCC M415-M425 ...	BCC M425-M415 ...	BCC M425 ...
	M12x1 female, L-coded M12x1 male, L-coded	M12x1 female, L-coded M12x1 male, L-coded	M12x1 female, L-coded M12x1 male, L-coded
	straight/angled	straight/angled	angled/angled
	50 V DC / 60 V AC	50 V DC / 60 V AC	50 V DC / 60 V AC
	16 A	16 A	16 A
	IP65, IP67, IP69k	IP65, IP67, IP69k	IP65, IP67, IP69k
	BCC M415-M425-3L-386-PX85A5-_ _ _①	BCC M425-M415-3L-386-PX85A5-_ _ _①	BCC M425-M425-3L-386-PX85A5-_ _ _①
	UL, CE, EAC, WEEE	UL, CE, EAC, WEEE	UL, CE, EAC, WEEE
	169	169	169

	Material	Color	Number of conductors × conductor cross-section	Cable temperature fixed in place	Cable temperature fiexed
UNSHIELDED					
PX8A5	PUR	grey	5 × 1.5 mm^2	–50...+80 °C	–20...+80 °C

①	Cable length
CONNECTION CABLE	
006	0.6 m
020	2 m
050	5 m
100	10 m
150	15 m

Other cable lengths on request!

	BCC A313 ...	BCC A313 ...	
Connection	7/8“ female	7/8“ male	
Version	straight	straight	
Rated voltage	300 V AC/DC	300 V AC/DC	
Rated current	13 A	13 A	
Degree of protection	IP67, IP68	IP67, IP68	
unshielded, with PE	BCC A313-0000-10-097-PX03A5①-_ _ _②	–	
unshielded, no PE	BCC A313-0000-10-071-VX43W6①-_ _ _②	BCC A313-0000-20-071-VX43W6①-_ _ _②	
Approval/Conformity	CE, UL, EAC	CE, UL, EAC	
For drawing see page	163	163	

7/8“ female, with PE

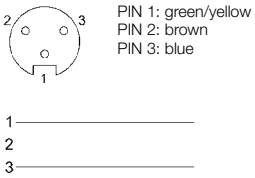

7/8“ female, no PE

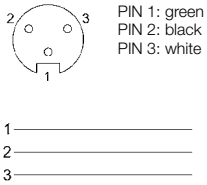

7/8“ male, no PE

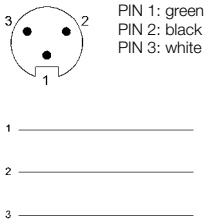

7/8“ female/7/8“ male, with PE

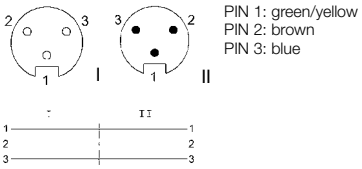

	BCC A323 ...	BCC A323 ...	BCC A313-A313 ...
	7/8“ female	7/8“ male	7/8“ female/ 7/8“ male
	angled	angled	straight/straight
	300 V AC/DC	300 V AC/DC	300 V AC/DC
	13 A	13 A	13 A
	IP67, IP68	IP67, IP68	IP67, IP68
	BCC A323-0000-10-097-PX03A5①-_ _ _②	–	BCC A313-A313-30-365-PX03A5①-_ _ _②
	BCC A323-0000-10-071-VX43W6①-_ _ _②	BCC A323-0000-20-071-VX43W6①-_ _ _②	–
	CE, UL, EAC	CE, UL, EAC	CE, UL, EAC
	163	163	163

①	Material	Color	Number of conductors × conductor cross-section	Cable temperature fixed in place	Cable temperature flexed
UNSHIELDED					
PX03A5	PUR	Black	3 × 1.5 mm^2	–40...+80 °C	–20...+80 °C
VX43W6	PVC	Yellow	3 × AWG16	–40...+105 °C	–

②	Cable length
CONNECTION CABLE	
020	2 m
050	5 m
100	10 m
CABLE	
006	0.6 m
020	2 m
050	5 m
100	10 m

Other cable lengths on request!

AVAILABLE AS BULK CABLE

	Order code	Part number	Cable length
VX43W6	BCC0AEF	BCC 0000-0000-00-071-VX43W6-10X	100 m

	BCC A314...	
Connection	7/8“ female	
Version	straight	
Rated voltage	300 V AC/DC	
Rated current	10 A	
Degree of protection	IP67, IP68	
unshielded	BCC A314-0000-10-003-_ _ _ _ _ _①-_ _ _②	
Approval/Conformity	CE, UL, EAC	
For drawing see page	163	

7/8" female

PIN 1: brown
PIN 2: white
PIN 3: blue
PIN 4: black

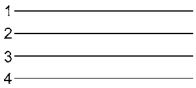

7/8“ male

PIN 1: brown
PIN 2: white
PIN 3: blue
PIN 4: black

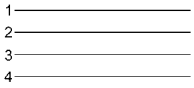

	BCC A314 ...	BCC A324 ...	BCC A324 ...
	7/8“ male	7/8“ female	7/8“ male
	straight	angled	angled
	300 V AC/DC	300 V AC/DC	300 V AC/DC
	10 A	10 A	10 A
	IP67, IP68	IP67, IP68	IP67, IP68
	BCC A314-0000-20-003-_ _ _ _ _ _①-_ _ _②	BCC A324-0000-10-003-_ _ _ _ _ _①-_ _ _②	BCC A324-0000-20-003-_ _ _ _ _ _①-_ _ _②
	CE, UL, EAC	CE, UL, EAC	CE, UL, EAC
	163	166	166

①	Material	Color	Number of conductors × conductor cross-section	Cable temperature fixed in place	Cable temperature flexed
UNSHIELDED					
PX04A5	PUR	Black	4 × 1.5 mm^2	–40...+80 °C	–20...+80 °C
VX44W6	PVC	Yellow	4 × AWG16	–40...+105 °C	–
EX44W6	TPE	Yellow	4 × AWG16	–50...+105 °C	–

②	Cable length
CONNECTION CABLE	
020	2 m
050	5 m
100	10 m

Other cable lengths on request!

AVAILABLE AS BULK CABLE

	Order code	Part number	Cable length
PX04A5	BCC0ACF	BCC 0000-0000-00-000-PX04A5-10X	100 m
VX44W6	BCC0AEJ	BCC 0000-0000-00-003-VX44W6-10X	100 m
EX44W6	BCC0APC	BCC 0000-0000-00-003-EX44W6-10X	100 m

	BCC A314-A314...	
Connection	7/8“ female/ 7/8“ male	
Version	straight/straight	
Rated voltage	300 V AC/DC	
Rated current	10 A	
Degree of protection	IP67, IP68	
unshielded	BCC A314-A314-30-304-_ _ _ _ _ _①-_ _ _②	
Approval/Conformity	CE, UL, EAC	
For drawing see page	166	

7/8" female/7/8" male

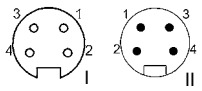

PIN 1: brown
PIN 2: white
PIN 3: blue
PIN 4: black

	BCC A314-A324...	BCC A324-A314 ...	BCC A324-A324 ...
	7/8“ female/ 7/8“ male	7/8“ female/ 7/8“ male	7/8“ female/ 7/8“ male
	straight/angled	angled/straight	angled/angled
	300 V AC/DC	300 V AC/DC	300 V AC/DC
	10 A	10 A	10 A
	IP67, IP68	IP67, IP68	IP67, IP68
	BCC A314-A324-30-304-_ _ _ _ _ _①-_ _ _②	BCC A324-A314-30-304-_ _ _ _ _ _①-_ _ _②	BCC A324-A324-30-304-_ _ _ _ _ _①-_ _ _②
	CE, UL, EAC	CE, UL, EAC	CE, UL, EAC
	166	166	166

①	Material	Color	Number of conductors × conductor cross-section	Cable temperature fixed in place	Cable temperature flexed
UNSHIELDED					
PX04A5	PUR	Black	4 × 1.5 mm^2	–40...+80 °C	–20...+80 °C
VX44W6	PVC	Yellow	4 × AWG16	–40...+105 °C	–
EX44W6	TPE	Yellow	4 × AWG16	–50...+105 °C	–

②	Cable length
CABLE	
006	0.6 m
020	2 m
050	5 m
100	10 m

Other cable lengths on request!

AVAILABLE AS BULK CABLE

	Order code	Part number	Cable length
PX04A5	BCC0ACF	BCC 0000-0000-00-000-PX04A5-10X	100 m
VX44W6	BCC0AEJ	BCC 0000-0000-00-003-VX44W6-10X	100 m
EX44W6	BCC0APC	BCC 0000-0000-00-003-EX44W6-10X	100 m

	BCC A315...	
Connection	7/8“ female	
Version	straight	
Rated voltage	300 V AC/DC	
Rated current	9 A	
Degree of protection	IP67, IP68	
unshielded	BCC A315-0000-10-063-_ _ _ _ _ _①-_ _ _②	
Approval/Conformity	CE, UL, EAC	
For drawing see page	166	

7/8" female

PIN 1: black
PIN 2: blue
PIN 3: green/yellow
PIN 4: brown
PIN 5: white

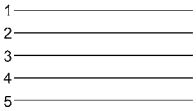

7/8“ male

PIN 1: black
PIN 2: blue
PIN 3: green/yellow
PIN 4: brown
PIN 5: white

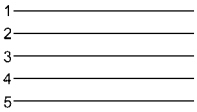

	BCC A315 ...	BCC A325 ...	BCC A325 ...
	7/8“ male	7/8“ female	7/8“ male
	straight	angled	angled
	300 V AC/DC	300 V AC/DC	300 V AC/DC
	9 A	9 A	9 A
	IP67, IP68	IP67, IP68	IP67, IP68
	BCC A315-0000-20-063-_ _ _ _ _ _①-_ _ _②	BCC A325-0000-10-063-_ _ _ _ _ _①-_ _ _②	BCC A325-0000-20-063-_ _ _ _ _ _①-_ _ _②
	CE, UL, EAC	CE, UL, EAC	CE, UL, EAC
	166	167	167

①	Material	Color	Number of conductors × conductor cross-section	Cable temperature fixed in place	Cable temperature flexed
UNSHIELDED					
PX05A5	PUR	Black	5 × 1.5 mm^2	–40...+80 °C	–20...+80 °C
VX45W6	PVC	Yellow	5 × AWG16	–40...+105 °C	–

②	Cable length
CONNECTION CABLE	
020	2 m
050	5 m
100	10 m

Other cable lengths on request!

AVAILABLE AS BULK CABLE

	Order code	Part number	Cable length
PX05A5	BCC0ACH	BCC 0000-0000-00-000-PX05A5-10X	100 m
VX45W6	BCC0AEK	BCC 0000-0000-00-036-VX45W6-10X	100 m

	BCC A315-A315...	
Connection	7/8“ female/ 7/8“ male	
Version	straight/straight	
Rated voltage	300 V AC/DC	
Rated current	9 A	
Degree of protection	IP67, IP68	
unshielded with PE	BCC A315-A315-30-335-_ _ _ _ _ _①-_ _ _②	
Approval/Conformity	CE, UL, EAC	
For drawing see page	167	

7/8" female/7/8" male

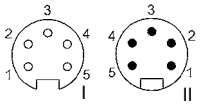

PIN 1: black
PIN 2: blue
PIN 3: green/yellow
PIN 4: brown
PIN 5: white

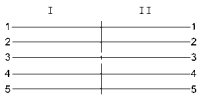

	BCC A315-A325...	BCC A325-A315 ...	BCC A325-A325 ...
	7/8“ female/ 7/8“ male	7/8“ female/ 7/8“ male	7/8“ female/ 7/8“ male
	straight/angled	angled/straight	angled/angled
	300 V AC/DC	300 V AC/DC	300 V AC/DC
	9 A	9 A	9 A
	IP67, IP68	IP67, IP68	IP67, IP68
	BCC A315-A325-30-335-_ _ _ _ _ _①-_ _ _②	BCC A325-A315-30-335-_ _ _ _ _ _①-_ _ _②	BCC A325-A325-30-335-_ _ _ _ _ _①-_ _ _②
	CE, UL, EAC	CE, UL, EAC	CE, UL, EAC
	167	167	167

①	Material	Color	Number of conductors × conductor cross-section	Cable temperature fixed in place	Cable temperature flexed
UNSHIELDED					
PX05A5	PUR	Black	5 × 1.5 mm^2	–40...+80 °C	–20...+80 °C
VX45W6	PVC	Yellow	5 × AWG16	–40...+105 °C	–

②	Cable length
CABLE	
006	0.6 m
020	2 m
050	5 m
100	10 m

Other cable lengths on request!

AVAILABLE AS BULK CABLE

	Order code	Part number	Cable length
PX05A5	BCC0ACH	BCC 0000-0000-00-000-PX05A5-10X	100 m
VX45W6	BCC0AEK	BCC 0000-0000-00-036-VX45W6-10X	100 m

	BCC C3B4 ...	
Connection	7/8“ female	
Version	straight	
Rated voltage	300 V AC/DC	
Rated current	10 A	
Degree of protection	IP69k	
unshielded 4-conductor	BCC C3B4-0000-10-003-YX84A5-_ _ _①-C009	
unshielded 5-conductor		
Approval/Conformity	CE, EAC, ECOLAB, WEEE	
For drawing see page	167	

7/8“ female 4-conductor

PIN 1: brown
PIN 2: white
PIN 3: blue
PIN 4: black

7/8“ female 5-conductor

PIN 1: brown
PIN 2: white
PIN 3: blue
PIN 4: black
PIN 5: grün/gelb

7/8“ female/7/8“ male 4-conductor

PIN 1: brown
PIN 2: white
PIN 3: blue
PIN 4: black

7/8“ female/7/8“ male 5-conductor

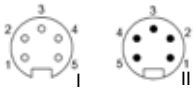

PIN 1: brown
PIN 2: white
PIN 3: blue
PIN 4: black
PIN 5: grün/gelb

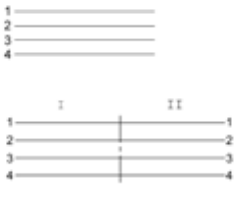

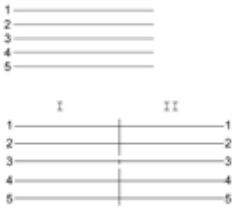

Do you need more details? Our Product Finder at www.balluff.com provides you with product-specific information, including technical drawings, data sheets, user guides and more for each individual product. All items are available for download.

	BCC C3B5...	BCC C3B4-C3B4 ...	BCC C3B4-C3B4 ...
	7/8“ female	7/8“ female 7/8“ male	7/8“ female 7/8“ male
	straight	straight/straight	straight
	300 V AC/DC	300 V AC/DC	300 V AC/DC
	9 A	10 A	9 A
	IP69k	IP69k	IP69k
		BCC C3B4-C3B4-30-304-YX84A5-_ _ _①-C009	
	BCC C3B5-0000-10-063-YX85A5-_ _ _①-C009		BCC C3B5-C3B5-30-335-YX85A5-_ _ _①-C009
	CE, EAC, ECOLAB, WEEE	CE, EAC, ECOLAB, WEEE	CE, EAC, ECOLAB, WEEE
	167	168	168

	Material	Color	Number of conductors × conductor cross-section	Cable temperature fixed in place	Cable temperature fiexed
UNSHIELDED					
YX84A5	TPE-V	grey	4 × 1.5 mm^2	–50...+105 °C	–25...+105 °C
YX85A5	TPE-V	grey	5 × 1.5 mm^2	–50...+105 °C	– –25...+105 °C

①	Cable length
CONNECTION CABLE	
020	2 m
050	5 m
010	10 m
015	15 m

①	Cable length
CONNECTION	
006	0.6 m
020	2 m
050	5 m
100	10 m
150	15 m

Other cable lengths on request!

		BCC VA04 ...
Connection		DIN A, 18 mm, 0°/180°, female
Version		angled
Rated voltage	No LED	250 V AC/DC
	with LED	30 V AC/DC
Rated current		6 A
Degree of protection		IP67
No protection circuit, no LED, 3-conductor		BCC VA04-0000-10-054-_ _ _ _ _ _①-_ _ _②
With suppressor diode, with PNP-LED, 3-conductor		BCC VA04-0000-10-053-_ _ _ _ _ _①-_ _ _②
No protection circuit, with PNP-LED, 5-conductor		–
Approval/Conformity		CE, EAC
For drawing see page		168

DIN A, 18 mm, 3-conductor

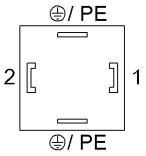

PIN 1: brown
PIN 2: blue
PIN PE: green/yellow

DIN A, 18 mm/M12 male, 3-conductor

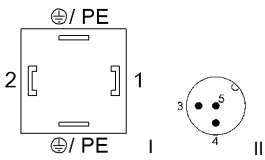

PIN 1: brown
PIN 2: blue
PIN PE: green/yellow

PIN 3: blue
PIN 4: brown
PIN 5: green/yellow

DIN A, 18 mm for pressure switch, 0°, 5-conductor

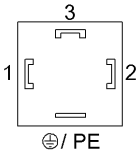

no PIN: blue
PIN 1: brown
PIN 2: white
PIN 3: black
PIN PE: green/ yellow

DIN A, 18 mm for pressure switch, 180°, 5-conductor

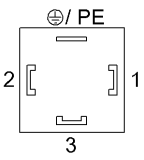

no PIN: blue
PIN 1: brown
PIN 2: white
PIN 3: black
PIN PE: green/yellow

No protection circuit, no LED

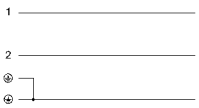

With suppressor diode, with PNP-LED*

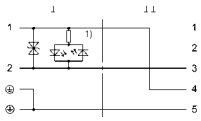

No protection circuit, with PNP-LED*

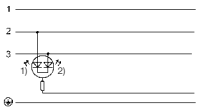

No protection circuit, with PNP-LED*

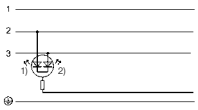

With suppressor diode, with PNP-LED*

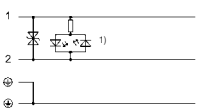

* 1) LED yellow
2) LED green

	BCC VA04-M413 ...	BCC PA04 ...	BCC PA24 ...
	DIN A, 18 mm, 0°/180°, female/M12 male, A-coded	DIN A, 18 mm, for pressure switch, 0°, female	DIN A, 18 mm, for pressure switch, 180°, female
	angled/straight	angled	angled
	–	–	–
	30 V AC/DC	30 V AC/DC	30 V AC/DC
	6 A	6 A	6 A
	IP67/IP67, IP69K	IP67	IP67
	–	–	–
	BCC VA04-M413-3E-664-_ _ _ _ _ _①-_ _ _②	–	–
	–	BCC PA04-0000-10-070-PX0550①-_ _ _②	BCC PA24-0000-10-070-PX0550①-_ _ _②
	CE, EAC	CE, EAC	CE, EAC
	168	170	170

①	Material	Color	Number of conductors × conductor cross-section	Cable temperature fixed in place	Cable temperature flexed
UNSHIELDED					
PX0350	PUR	Black	3 × 0.5 mm^2	–50...+80 °C	–25...+80 °C
VX8350	PVC	Gray	3 × 0.5 mm^2	–40...+105 °C	+5...+105 °C
PX0550	PUR	Black	5 × 0.5 mm^2	–50...+80 °C	–25...+80 °C

②	Cable length
CONNECTION CABLE	
020	2 m
050	5 m
100	10 m
CABLE	
003	0.3 m
006	0.6 m
010	1 m
015	1.5 m
020	2 m
050	5 m

Other cable lengths on request!

	BCC VB03 ...	
Connection	DIN B, 10 mm, 0°, female	
Version	angled	
Rated voltage	30 V AC/DC	
Rated current	4 A	
Degree of protection	IP67	
With suppressor diode, with PNP-LED	BCC VB03-0000-10-055-_ _ _ _ _ _①-_ _ _②	
Approval/Conformity	CE, EAC	
For drawing see page	170	

DIN B, 10 mm, 0°

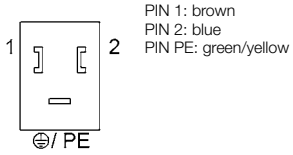

With suppressor diode, with PNP-LED*

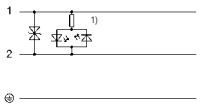

DIN B, 10 mm, 180°

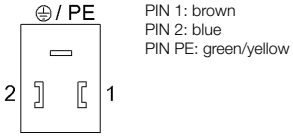

With suppressor diode, with PNP-LED*

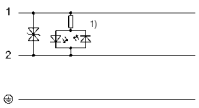

Industry B, 11 mm, 0°

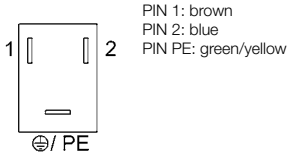

With suppressor diode, with PNP-LED*

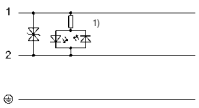

Industry B, 11 mm, 180°

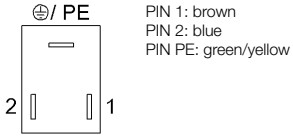

With suppressor diode, with PNP-LED*

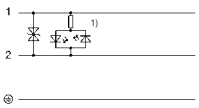

* 1) LED yellow

	BCC VB23 ...	BCC VB43 ...	BCC VB63 ...
	DIN B, 10 mm, 180°, female	Industry B, 11 mm, 0°, female	Industry B, 11 mm, 180°, female
	angled	angled	angled
	30 V AC/DC	30 V AC/DC	30 V AC/DC
	4 A	4 A	4 A
	IP67	IP67	IP67
	BCC VB23-0000-10-055-_ _ _ _ _ _①-_ _ _②	BCC VB43-0000-10-055-_ _ _ _ _ _①-_ _ _②	BCC VB63-0000-10-055-_ _ _ _ _ _①-_ _ _②
	CE, EAC	CE, EAC	CE, EAC
	170	170	170

①	Material	Color	Number of conductors × conductor cross-section	Cable temperature fixed in place	Cable temperature flexed
UNSHIELDED					
PX0350	PUR	Black	3 × 0.5 mm^2	–50...+80 °C	–25...+80 °C
VX8350	PVC	Gray	3 × 0.5 mm^2	–40...+105 °C	+5...+105 °C

②	Cable length
CONNECTION CABLE	
020	2 m
050	5 m
100	10 m

Other cable lengths on request!

	BCC VB03-M413 ...	
Connection	DIN B, 10 mm, 0°, female/M12 male, A-coded	
Version	angled/straight	
Rated voltage	30 V AC/DC	
Rated current	4 A	
Degree of protection	IP67	
With suppressor diode, with PNP-LED	BCC VB03-M413-3E-666-PX0350①-_ _ _②	
Approval/Conformity	CE, EAC	
For drawing see page	170	

DIN B, 10 mm, 0°/ M12 male

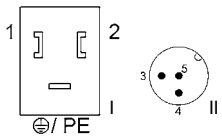

PIN 1: brown
PIN 2: blue
PIN PE: green/ yellow
PIN 3: blue
PIN 4: brown
PIN 5: green/ yellow

With suppressor diode, with PNP-LED*

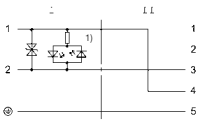

DIN B, 10 mm, 180°/ M12 male

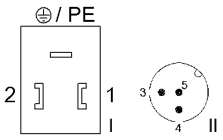

PIN 1: brown
PIN 2: blue
PIN PE: green/ yellow
PIN 3: blue
PIN 4: brown
PIN 5: green/ yellow

With suppressor diode, with PNP-LED*

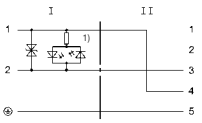

Industry B, 11 mm, 0°/ M12 male

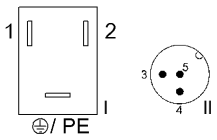

PIN 1: brown
PIN 2: blue
PIN PE: green/ yellow
PIN 3: blue
PIN 4: brown
PIN 5: green/ yellow

With suppressor diode, with PNP-LED*

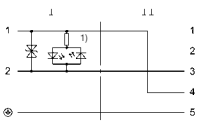

Industry B, 11 mm, 180°/ M12 male

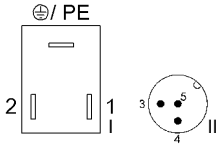

PIN 1: brown
PIN 2: blue
PIN PE: green/ yellow
PIN 3: blue
PIN 4: brown
PIN 5: green/ yellow

With suppressor diode, with PNP-LED*

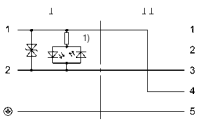

* 1) LED yellow

	BCC VB23-M413 ...	BCC VB43-M413 ...	BCC VB63-M413 ...
	DIN B, 10 mm, 180°, female/M12 male, A-coded	Industry B, 11 mm, 0°, female/M12 male, A-coded	Industry B, 11 mm, 180°, female/M12 male, A-coded
	angled/straight	angled/straight	angled/straight
	30 V AC/DC	30 V AC/DC	30 V AC/DC
	4 A	4 A	4 A
	IP67	IP67	IP67
	BCC VB23-M413-3E-666-PX0350①-_ _ _②	BCC VB43-M413-3E-666-PX0350①-_ _ _②	BCC VB63-M413-3E-666-PX0350①-_ _ _②
	CE, EAC	CE, EAC	CE, EAC
	170	171	171

①	Material	Color	Number of conductors × conductor cross-section	Cable temperature fixed in place	Cable temperature flexed
UNSHIELDED					
PX0350	PUR	Black	3 × 0.5 mm^2	–50...+80 °C	–25...+80 °C

②	Cable length
CABLE	
003	0.3 m
006	0.6 m
010	1 m
015	1.5 m
020	2 m
050	5 m

Other cable lengths on request!

	BCC VC04 ...	
Connection	DIN C, 8 mm, 0°/180°, female	
Version	angled	
Rated voltage	30 V AC/DC	
Rated current	4 A	
Degree of protection	IP67	
With suppressor diode, with PNP-LED	BCC VC04-0000-10-053-_ _ _ _ _ _①-_ _ _②	
Approval/Conformity	CE, EAC	
For drawing see page	171	

DIN C, 8 mm

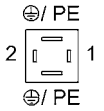

PIN 1: brown
PIN 2: blue
PIN PE: green/ yellow

With suppressor diode, with PNP-LED*

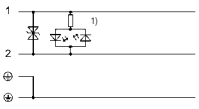

DIN C, 8 mm/ M12 male

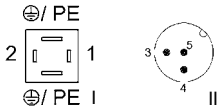

PIN 1: brown
PIN 2: blue
PIN PE: green/ yellow
PIN 3: blue
PIN 4: brown
PIN 5: green/ yellow

With suppressor diode, with PNP-LED*

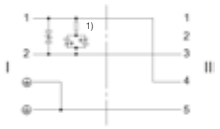

Industry C, 9.4 mm

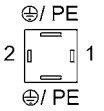

PIN 1: brown
PIN 2: blue
PIN PE: green/ yellow

With suppressor diode, with PNP-LED*

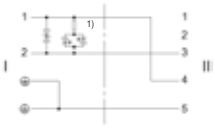

Industry C, 9.4 mm/ M12 male

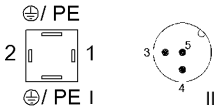

PIN 1: brown
PIN 2: blue
PIN PE: green/ yellow
PIN 3: blue
PIN 4: brown
PIN 5: green/ yellow

With suppressor diode, with PNP-LED*

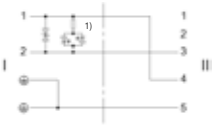

* 1) LED yellow

	BCC VC04-M413 ...	BCC VC44 ...	BCC VC44-M413 ...
	DIN C, 8 mm, 0°/180°, female/M12 male, A-coded	Industry C, 9.4 mm, 0°/180°, female	Industry C, 9.4 mm, 0°/180°, female/M12 male, A-coded
	angled/straight	angled	angled/straight
	30 V AC/DC	30 V AC/DC	30 V AC/DC
	4 A	4 A	4 A
	IP67	IP67	IP67
	BCC VC04-M413-3E-664-PX0350①-_ _ _②	BCC VC44-0000-10-053-_ _ _ _ _ _①-_ _ _②	BCC VC44-M413-3E-664-PX0350①-_ _ _②
	CE, EAC	CE, EAC	CE, EAC
	171	171	<?>

①	Material	Color	Number of conductors × conductor cross-section	Cable temperature fixed in place	Cable temperature flexed
UNSHIELDED					
PX0350	PUR	Black	3 × 0.5 mm^2	–50...+80 °C	–25...+80 °C
VX8350	PVC	Gray	3 × 0.5 mm^2	–40...+105 °C	+5...+105 °C

②	Cable length
CONNECTION CABLE	
020	2 m
050	5 m
100	10 m
CABLE	
003	0.3 m
006	0.6 m
010	1 m
015	1.5 m
020	2 m
050	5 m

Other cable lengths on request!

	BCC M414-M414...	
Connection	M12 male, D-coded/ M12 male, D-coded	
Version	straight/straight	
Rated voltage	250 V AC/DC	
Rated current	4 A	
Degree of protection	IP67, IP68, IP69K/IP67, IP68, IP69K	
shielded	BCC M414-M414-6D-331-PS54N2①-_ _ _②	
Approval/Conformity	UL, EAC	
For drawing see page	171	

M12 male/M12 male

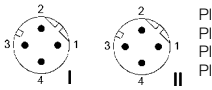

PIN 1: yellow
PIN 2: white
PIN 3: orange
PIN 4: blue

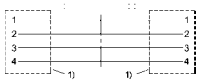

M12 male/ RJ45 male

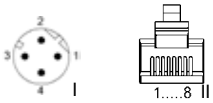

PIN 1: yellow
PIN 2: white
PIN 3: orange
PIN 4: blue

PIN 1: yellow
PIN 2: orange
PIN 3: white
PIN 6: blue

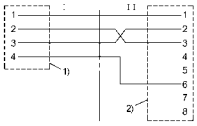

RJ45 male/ RJ45 male

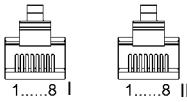

PIN 1: yellow
PIN 2: orange
PIN 3: white
PIN 6: blue

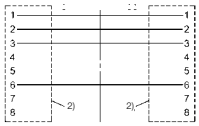

[1] Shield on cover nut
[2] Shield on housing

	BCC M414-E834...	BCC E834-E834 ...
	M12 male, D-coded/ RJ45, male	RJ45, male/ RJ45, male
	straight	straight/straight
	125 V AC/DC	125 V AC/DC
	1 A	1 A
	IP67, IP68, IP69K/IP20	IP20, IP20
	BCC M414-E834-8G-668-PS54N2①-_ _ _②	BCC E834-E834-90-334-PS54N2①-_ _ _②
	CE, EAC	CE, EAC
	171	172

①	Material	Color	Number of conductors × conductor cross-section	Cable temperature fixed in place	Cable temperature flexed
SHIELDED					
PS54N2	PUR	Green	4 × AWG22	–40...+80 °C	-20...+60 °C

②	Cable length
CABLE	
006	0.6 m
020	2 m
050	5 m
100	10 m
150	15 m
200	20 m

Other cable lengths on request!

AVAILABLE AS BULK CABLE

	Order code	Part number	Cable length
PS54N2	BCC0AC6	BCC 0000-0000-00-000-PS54N2-10X	100 m

	BCC M414-M414...	
Connection	M12 male, D-coded/ M12 male, D-coded	
Version	straight/straight	
Rated voltage	250 V AC/DC	
Rated current	4 A	
Degree of protection	IP67, IP68, IP69K/IP67, IP68, IP69K	
shielded	BCC M414-M414-6D-338-ES64N9①-_ _ _②	
Approval/Conformity	UL, EAC	
For drawing see page	171	

M12 male/M12 male

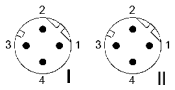

PIN 1: white/orange
PIN 2: white/green
PIN 3: orange
PIN 4: green

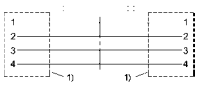

M12 male/ RJ45 male

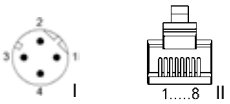

PIN 1: white/orange
PIN 2: white/green
PIN 3: orange
PIN 4: green

PIN 1: white/orange
PIN 2: orange
PIN 3: white/green
PIN 6: green

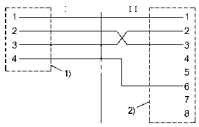

RJ45 male/ RJ45 male

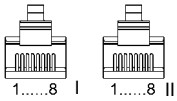

PIN 1: white/orange
PIN 2: orange
PIN 3: white/green
PIN 6: green

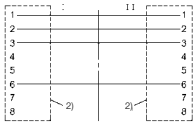

[1] Shield on cover nut
[2] Shield on housing

	BCC M414-E834...	BCC E834-E834 ...
	M12 male, D-coded/ RJ45, male	RJ45, male/ RJ45, male
	straight/straight	straight/straight
	30 V AC/42 V DC	30 V AC/42 V DC
	1 A	1 A
	IP67, IP68, IP69K/IP20	IP20/IP20
	BCC M414-E894-8G-672-ES64N9①-_ _ _②	BCC E894-E894-90-339-ES64N9①-_ _ _②
	CE, EAC	CE, EAC
	172	172

①	Material	Color	Number of conductors × conductor cross-section	Cable temperature fixed in place	Cable temperature flexed
SHIELDED					
ES64N9	TPE	turquoise blue	2 × 2 AWG24	–40...+80 °C	–40...+80 °C

②	Cable length
CABLE	
006	0.6 m
010	1 m
020	2 m
050	5 m
100	10 m
150	15 m
200	20 m

Other cable lengths on request!

AVAILABLE AS BULK CABLE

	Order code	Part number	Cable length
ES64N9	BCC0AUJ	BCC 0000-0000-00-168-ES64N9-10X	100 m

	BCC M418-M418...	
Connection	M12 male, X-coded/ M12 male, X-coded	
Version	straight/straight	
Rated voltage	50 V AC/60 V DC	
Rated current	0.5 A	
Degree of protection	IP67/IP67	
shielded	BCC M418-M418-6X-378-PS58N9①-_ _ _②	
Approval/Conformity	CE, UL, EAC	
For drawing see page	172	

M12 male/M12 male

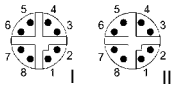

PIN 1: white/orange
PIN 2: orange
PIN 3: white/green
PIN 4: green
PIN 5: white/brown
PIN 6: brown
PIN 7: white/blue
PIN 8: blue

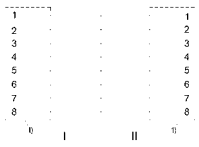

M12 male/ RJ45 male

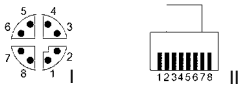

PIN 1: white/orange
PIN 2: orange
PIN 3: white/green
PIN 4: green
PIN 5: white/brown
PIN 6: brown
PIN 7: white/blue
PIN 8: blue

PIN 1: white/orange
PIN 2: orange
PIN 3: white/green
PIN 4: blue
PIN 5: white/blue
PIN 6: green
PIN 7: white/brown
PIN 8: brown

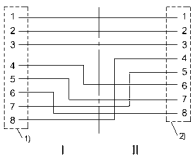

RJ45 male/ RJ45 male

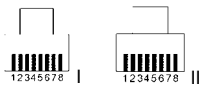

PIN 1: white/orange
PIN 2: orange
PIN 3: white/green
PIN 4: blue
PIN 5: white/blue
PIN 6: green
PIN 7: white/brown
PIN 8: brown

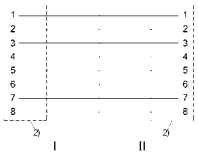

1) Shield on cover nut
2) Shield on housing

	BCC M418-E818...	BCC E818-E818 ...
	M12 male, X-coded/ RJ45, male	RJ45, male/ RJ45, male
	straight/straight	straight/straight
	50 V AC/60 V DC	50 V AC/60 V DC
	0.5 A	0.5 A
	IP67/IP20	IP20/IP20
	BCC M418-E818-8X0-723-PS58N9①-_ _ _②	BCC E818-E818-90-377-PS58N9①-_ _ _②
	CE, UL, EAC	CE, UL, EAC
	172	172

①	Material	Color	Number of conductors × conductor cross-section	Cable temperature fixed in place	Cable temperature flexed
SHIELDED					
PS58N9	PUR	Green	4 × 2 AWG26	–40...+85 °C	–10...+60 °C

②	Cable length
CABLE	
010	1 m
020	2 m
050	5 m
100	10 m

Other cable lengths on request!

Connection	
Version	
Rated voltage	
Rated current	
Degree of protection	
shielded	
Approval/Conformity	
For drawing see page	

M12 female

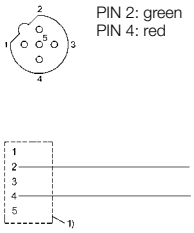

M12 female/M12 male

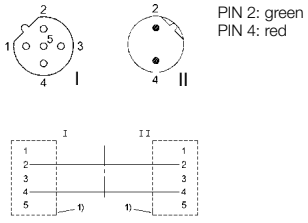

1) Shield on cover nut

	BCC M415 ...	BCC M415-M412...
	M12 female, B-coded	M12 female, B-coded/ M12 male, B-coded
	straight	straight/straight
	250 V AC/DC	250 V DC
	4 A	4 A
	IP67	IP67/IP67
	BCC M415-0000-1B-031-PS72N1①-_ _ _②	BCC M415-M412-3B-329-PS72N1①-_ _ _②
	UL, EAC	UL, EAC
	172	173

①	Material	Color	Number of conductors × conductor cross-section	Cable temperature fixed in place	Cable temperature flexed
SHIELDED					
PS72N1	PUR	Violet	2 × AWG24	–40...+70 °C	-20...+60 °C

②	Cable length
CONNECTION CABLE	
003	0.3 m
006	0.6 m
010	1 m
020	2 m
050	5 m
100	10 m
150	15 m
CABLE	
020	2 m
050	5 m
100	10 m

Other cable lengths on request!

AVAILABLE AS BULK CABLE

	Order code	Part number	Cable length
PS72N1	BCC0ACA	BCC 0000-0000-00-000-PS72N1-10X	100 m

Connection	
Version	
Rated voltage	
Rated current	
Degree of protection	
shielded, thick	
shielded, thin	
Approval/Conformity	
For drawing see page	

M12 female/M12 male

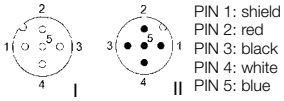

PIN 1: shield
PIN 2: red
PIN 3: black
PIN 4: white
PIN 5: blue

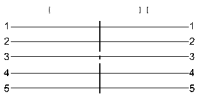

7/8" female/7/8" male

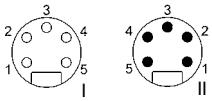

PIN 1: shield
PIN 2: red
PIN 3: black
PIN 4: white
PIN 5: blue

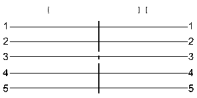

	BCC M415-M415...	BCC A315-A315...
	M12 female, A-coded/ M12 male, A-coded	7/8“, female/ 7/8“, male
	straight/straight	straight/straight
	60 V AC/DC	300 V DC
	4 A	9 A
	IP67, IP68, IP69K/IP67, IP68, IP69K	IP67, IP68/IP67, IP68
	–	BCC A315-A315-30-330-_ _ _ _ _ _①-_ _ _②
	BCC M415-M415-3A-330-_ _ _ _ _ _①-_ _ _②	BCC A315-A315-30-330-_ _ _ _ _ _①-_ _ _②
	CE, UL, EAC	UL, EAC
	173	173

①	Material	Color	Number of conductors × conductor cross-section	Cable temperature fixed in place	Cable temperature flexed
SHIELDED, THICK					
PS85N4	PUR	Gray	2 × AWG15 2 × AWG18	–20...+80 °C	–
VS85N4	PVC	Gray	2 × AWG15 2 × AWG18	–40...+80 °C	–
SHIELDED, THIN					
PS85N6	PVC	Gray	2 × AWG22 2 × AWG22	–20...+80 °C	–
VS85N6	PVC	Gray	2 × AWG22 2 × AWG22	–20...+80 °C	–

②	Cable length
CABLE	
006	0.6 m
010	1 m
020	2 m
050	5 m
100	10 m

Other cable lengths on request!

AVAILABLE AS BULK CABLE

	Order code	Part number	Cable length
PS85N4	BCC0AEM	BCC 0000-0000-00-030-PS85N4-10X	100 m
VS85N4	BCC0AEL	BCC 0000-0000-00-030-VS85N4-10X	100 m
PS85N6	BCC0AER	BCC 0000-0000-00-030-PS85N6-10X	100 m
VS85N6	BCC0AEP	BCC 0000-0000-00-030-VS85N6-10X	100 m

	BCC M415 ...	
Connection	M12 female, A-coded	
Version	straight	
Rated voltage	250 V AC/DC	
Rated current	4 A	
Degree of protection	IP67, IP68, IP69K	
shielded	BCC M415-0000-1A-068-VS24N7①-_ _ _②	
Approval/Conformity	UL, EAC	
For drawing see page	173	

M12 female

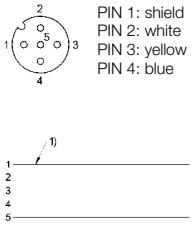

M12 male

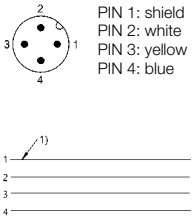

M12 female/M12 male

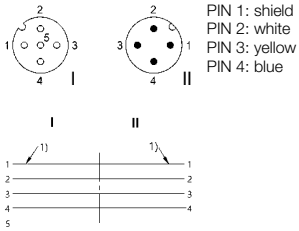

1) Shield on PIN 1

	BCC M414 ...	BCC M415-M414 ...
	M12 male, A-coded	M12 female, A-coded/ M12 male, A-coded
	straight	straight/straight
	250 V AC/DC	250 V AC/DC
	4 A	4 A
	IP67, IP68, IP69K	IP67, IP68, IP69K/IP67, IP68, IP69K
	BCC M414-0000-2A-068-VS24N7①-_ _ _②	BCC M415-M414-3A-337-VS24N7①-_ _ _②
	UL, EAC	UL, EAC
	173	173

①	Material	Color	Number of conductors × conductor cross-section	Cable temperature fixed in place	Cable temperature flexed
SHIELDED					
VS24N7	PVC	Red	3 × AWG20	–40...+70 °C	–

②	Cable length
CONNECTION CABLE	
020	2 m
050	5 m
100	10 m
CABLE	
006	0.6 m
020	2 m
050	5 m
100	10 m

Other cable lengths on request!

AVAILABLE AS BULK CABLE

	Order code	Part number	Cable length
VS24N7	BCC0ACE	BCC 0000-0000-00-000-VS24N7-10X	100 m

	BCC M61C ...	
Connection	M23 female, 12-pin	
Version	straight	
Rated voltage	250 V AC/DC	
Rated current	8 A	
Degree of protection	IP67	
unshielded, no LED, 3-conductor	BCC M61C-0000-10-065-PX0BP4①-_ _ _②	
Approval/Conformity	EAC	
For drawing see page	173	

M23 female, 12-pin

PIN 1: white
PIN 2: green
PIN 3: yellow
PIN 4: gray
PIN 5: gray/pink
PIN 6: red/blue
PIN 7: white/green
PIN 8: brown/green
PIN 9: blue
PIN 10: blue
PIN 11: brown
PIN 12: green/yellow

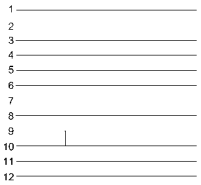

M23 female, 19-pin

PIN 1: purple
PIN 2: red
PIN 3: gray
PIN 4: red/blue
PIN 5: green
PIN 6: blue
PIN 7: gray/pink
PIN 8: white/green
PIN 9: white/yellow
PIN 10: white/gray
PIN 11: black
PIN 12: green/yellow
PIN 13: yellow/brown
PIN 14: brown/green
PIN 15: white
PIN 16: yellow
PIN 17: pink
PIN 18: gray/brown
PIN 19: brown

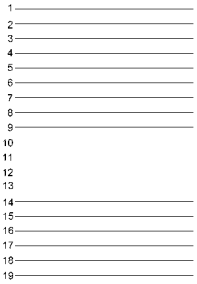

	BCC M62C ...	BCC M61L ...	BCC M62L ...
	M23 female, 12-pin	M23 female, 19-pin	M23 female, 19-pin
	angled	straight	angled
	250 V AC/DC	125 V AC/DC	125 V AC/DC
	8 A	3 × 10 A/16 × 8 A	3 × 10 A/16 × 8 A
	IP67	IP67	IP67
	BCC M62C-0000-10-065-PX0BP4①-_ _ _②	BCC M61L-0000-10-022-PX0LP4①-_ _ _②	BCC M62L-0000-10-022-PX0LP4①-_ _ _②
	EAC	CE, EAC	CE, EAC
	173	174	174

①	Material	Color	Number of conductors × conductor cross-section	Cable temperature fixed in place	Cable temperature flexed
UNSHIELDED					
PX0BP4	PUR	Black	3 × 1.0 mm^2 8 × 0.5 mm^2	–50...+80 °C	–25...+80 °C
PX0LP4	PUR	Black	3 × 1.0 mm^2 16 × 0.5 mm^2	–50...+80 °C	–25...+80 °C

②	Cable length
CONNECTION CABLE	
020	2 m
050	5 m
100	10 m

Other cable lengths on request!

	BCC0069 BKS-S 48-15-CP-02	BCC006A BKS-S 48-15-CP-05	
Connection	M8x1-Female, straight, 3-pole, A-coded	M8x1-Female, straight, 3-pole, A-coded	
Power indicator	—	—	
Function indicator (Pin 2)	—	—	
Function indicator (Pin 3)	—	—	
Function indicator (Pin 4)	—	—	
Suppressor	—	—	
Interface	—	—	
Cable	PUR Shielded black, 2.00 m	PUR Shielded black, 5.00 m	
Number of conductors	2	2	
Cable temperature, fixed routing	-40...70 °C	-40...70 °C	
Cable temperature, flexible routing	5...70 °C	5...70 °C	
Operating voltage Ub	36 VDC / 30 VAC	36 VDC / 30 VAC	
Rated current (40 °C)	3.0 A	3.0 A	
Protection degree	IP67	IP67	
Approval/Conformity	CE, EAC	CE, EAC	
Productview	Page 168	Page 168	

	BCC006C BKS-S 48-15-CP-10	BCC0098 BKS-S137-19-PC-02	BCC0099 BKS-S137-19-PC-05	BCC009A BKS-S137-19-PC-10
	M8x1-Female, straight, 3-pole, A-coded	M12x1-Female, straight, 5-pole, A-coded	M12x1-Female, straight, 5-pole, A-coded	M12x1-Female, straight, 5-pole, A-coded
	–	–	–	–
	–	–	–	–
	–	–	–	–
	–	–	–	–
	–	–	–	–
	–	–	–	–
	PUR Shielded black, 10.00 m	PUR Shielded black, 2.00 m, Drag chain compatible	PUR Shielded black, 5.00 m, Drag chain compatible	PUR Shielded black, 10.00 m, Drag chain compatible
	2	5	5	5
	-40...70 °C	-50...80 °C	-50...80 °C	-50...80 °C
	5...70 °C	-25...80 °C	-25...80 °C	-25...80 °C
	36 VDC / 30 VAC	36 VDC / 30 VAC	36 VDC / 30 VAC	36 VDC / 30 VAC
	3.0 A	4.0 A	4.0 A	4.0 A
	IP67	IP68	IP68	IP68
	CE, EAC	CE, EAC	CE, EAC	CE, EAC
	Page 168	Page 168	Page 168	Page 168

	BCC00TU BKS-S 32M-02	BCC00TY BKS-S 32M-05	
Connection	M16x0.75-Female, straight, 8-pole	M16x0.75-Female, straight, 8-pole	
Power indicator	—	—	
Function indicator (Pin 2)	—	—	
Function indicator (Pin 3)	—	—	
Function indicator (Pin 4)	—	—	
Suppressor	—	—	
Interface	—	—	
Cable	PUR Shielded black, 2.00 m, Drag chain compatible	PUR Shielded black, 5.00 m, Drag chain compatible	
Number of conductors	8	8	
Cable temperature, fixed routing	-50...80 °C	-50...80 °C	
Cable temperature, flexible routing	-25...80 °C	-25...80 °C	
Operating voltage Ub	60 VDC / 60 VAC	60 VDC / 60 VAC	
Rated current (40 °C)	5.0 A	5.0 A	
Protection degree	IP67	IP67	
Approval/Conformity	CE, EAC	CE, EAC	
Productview	Page 168	Page 168	

	BCC00TZ BKS-S 32M-10			
	M16x0.75-Female, straight, 8-pole			
	–			
	–			
	–			
	–			
	–			
	–			
	PUR Shielded black, 10.00 m, Drag chain compatible			
	8			
	-50...80 °C			
	-25...80 °C			
	60 VDC / 60 VAC			
	5.0 A			
	IP67			
	CE, EAC			
	Page 168			

	BCC00UR BKS-S 33M-02	BCC00UU BKS-S 33M-05	
Connection	M16x0.75-Female, angled, 8-pole	M16x0.75-Female, angled, 8-pole	
Power indicator	—	—	
Function indicator (Pin 2)	—	—	
Function indicator (Pin 3)	—	—	
Function indicator (Pin 4)	—	—	
Suppressor	—	—	
Interface	—	—	
Cable	PUR Shielded black, 2.00 m, Drag chain compatible	PUR Shielded black, 5.00 m, Drag chain compatible	
Number of conductors	8	8	
Cable temperature, fixed routing	-50...80 °C	-50...80 °C	
Cable temperature, flexible routing	-25...80 °C	-25...80 °C	
Operating voltage Ub	60 VDC / 60 VAC	60 VDC / 60 VAC	
Rated current (40 °C)	5.0 A	5.0 A	
Protection degree	IP67	IP67	
Approval/Conformity	CE, EAC	CE, EAC	
Productview	Page 168	Page 168	

	BCC00UW BKS-S 33M-10	BCC00YE BKS-S115-PU-02	BCC00YF BKS-S115-PU-05	BCC00YH BKS-S115-PU-10
	M16x0.75-Female, angled, 8-pole	M12x1-Female, straight, 8-pole, A-coded	M12x1-Female, straight, 8-pole, A-coded	M12x1-Female, straight, 8-pole, A-coded
	–	–	–	–
	–	–	–	–
	–	–	–	–
	–	–	–	–
	–	–	–	–
	–	–	–	–
	PUR Shielded black, 10.00 m, Drag chain compatible	PUR Shielded black, 2.00 m, Drag chain compatible	PUR Shielded black, 5.00 m, Drag chain compatible	PUR Shielded black, 10.00 m, Drag chain compatible
	8	8	8	8
	-50...80 °C	-50...80 °C	-50...80 °C	-50...80 °C
	-25...80 °C	-25...80 °C	-25...80 °C	-25...80 °C
	60 VDC / 60 VAC	36 VDC / 30 VAC	36 VDC / 30 VAC	36 VDC / 30 VAC
	5.0 A	2.0 A	2.0 A	2.0 A
	IP67	IP68	IP68	IP68
	CE, EAC	CE, EAC	CE, EAC	CE, EAC
	Page 168	Page 168	Page 168	Page 168

	BCC0F4J BCC HB75-0000-PA-121-VX85B5-020	BCC0F4K BCC HB75-0000-PA-121-VX85B5-050	
Connection	Push-Pull Power-Female, straight, 5-pole	Push-Pull Power-Female, straight, 5-pole	
Power indicator	—	—	
Function indicator (Pin 2)	—	—	
Function indicator (Pin 3)	—	—	
Function indicator (Pin 4)	—	—	
Suppressor	—	—	
Interface	—	—	
Cable	PVC gray, 2.00 m	PVC gray, 5.00 m	
Number of conductors	5	5	
Cable temperature, fixed routing	-40...70 °C	-40...70 °C	
Cable temperature, flexible routing	-5...70 °C	-5...70 °C	
Operating voltage Ub	24 VDC	24 VDC	
Rated current (40 °C)	16.0 A	16.0 A	
Protection degree	IP67	IP67	
Approval/Conformity	CE, EAC	CE, EAC	
Productview	Page 168	Page 168	

	BCC0F4L BCC HB75-0000-PA-121-VX85B5-100	BCC0KL6 BCC Z032-0000-10-148-VS0CT4-050	BCC0KL7 BCC Z032-0000-10-148-VS0CT4-100	BCC0KL8 BCC Z032-0000-10-148-VS0CT4-200
	Push-Pull Power-Female, straight, 5-pole	Special connector-Female, straight, 12-pole	Special connector-Female, straight, 12-pole	Special connector-Female, straight, 12-pole
	–	–	–	–
	–	–	–	–
	–	–	–	–
	–	–	–	–
	–	–	–	–
	–	–	–	–
	PVC gray, 10.00 m	PVC Shielded black, 5.00 m	PVC Shielded black, 10.00 m	PVC Shielded black, 20.00 m
	5	12	12	12
	-40...70 °C	-30...80 °C	-30...80 °C	-30...80 °C
	-5...70 °C	-15...80 °C	-15...80 °C	-15...80 °C
	24 VDC	140 VDC / 100 VAC	140 VDC / 100 VAC	140 VDC / 100 VAC
	16.0 A	2.0 A	2.0 A	2.0 A
	IP67	IP50	IP50	IP50
	CE, EAC	EAC, CE	EAC, CE	EAC, CE
	Page 168	Page 168	Page 168	Page 168

	BAM01HL BIS U-500-EF-01	BAM01HM BIS U-500-EF-02	
Connection 1	R-TNC connector 7/16“-28 UN-EF-Female, straight, 1-pin	R-TNC connector 7/16“-28 UN-EF-Female, straight, 1-pin	
Connection 2	R-TNC connector 7/16“-28 UN-EF-Male, straight	R-TNC connector 7/16“-28 UN-EF-Male, straight	
Power indicator	—	—	
Function indicator (Pin 2)	—	—	
Function indicator (Pin 3)	—	—	
Function indicator (Pin 4)	—	—	
Suppressor	—	—	
Interface	—	—	
Cable	FRPE Shielded black, 1.00 m	FRPE Shielded black, 2.00 m	
Number of conductors	1	1	
Cable temperature, fixed routing	-40...85 °C	-40...85 °C	
Cable temperature, flexible routing	—	—	
Operating voltage Ub	—	—	
Rated current (40 °C)	—	—	
cal_protection_type_iec_60529	IP68	IP68	
Approval/Conformity	CE, CSA, cURus, EAC, WEEE	CE, CSA, cURus, EAC, WEEE	
Productview	Page 170	Page 170	

	BAM01YR BIS U-500-EF-03	BAM01HN BIS U-500-EF-05	BAM01HP BIS U-500-EF-10	BAM01WN BIS U-500-EF-15
	R-TNC connector 7/16“-28 UN-EF-Female, straight, 1-pin	R-TNC connector 7/16“-28 UN-EF-Female, straight, 1-pin	R-TNC connector 7/16“-28 UN-EF-Female, straight, 1-pin	R-TNC connector 7/16“-28 UN-EF-Female, straight, 1-pin
	R-TNC connector 7/16“-28 UN-EF-Male, straight	R-TNC connector 7/16“-28 UN-EF-Male, straight	R-TNC connector 7/16“-28 UN-EF-Male, straight	R-TNC connector 7/16“-28 UN-EF-Male, straight
	—	—	—	—
	—	—	—	—
	—	—	—	—
	—	—	—	—
	—	—	—	—
	—	—	—	—
	FRPE Shielded black	FRPE Shielded black, 5.00 m	FRPE Shielded black, 10.00 m	FRPE Shielded black
	1	1	1	1
	-40...85 °C	-40...85 °C	-40...85 °C	-40...85 °C
	—	—	—	—
	—	—	—	—
	—	—	—	—
	IP68	IP68	IP68	IP68
	CE, CSA, cURus, EAC, WEEE	CE, CSA, cURus, EAC, WEEE	CE, CSA, cURus, EAC, WEEE	CE, CSA, cURus, EAC, WEEE
	Page 170	Page 170	Page 170	Page 170

	BAM01WP BIS U-500-EF-20	BCC0L2Y BCC M415-M415-3L-386-PX85A5-006	
Connection 1	R-TNC connector 7/16“-28 UN-EF-Female, straight, 1-pin	M12x1-Female, straight, 5-pin, L-coded	
Connection 2	R-TNC connector 7/16“-28 UN-EF-Male, straight	M12x1-Male, straight, 5-pin, L-coded	
Power indicator	—	—	
Function indicator (Pin 2)	—	—	
Function indicator (Pin 3)	—	—	
Function indicator (Pin 4)	—	—	
Suppressor	—	—	
Interface	—	—	
Cable	FRPE Shielded black	PUR gray, 0.60 m, Drag chain compatible	
Number of conductors	1	5	
Cable temperature, fixed routing	-40...85 °C	-40...90 °C	
Cable temperature, flexible routing	—	-20...80 °C	
Operating voltage Ub	—	60 VDC / 50 VAC	
Rated current (40 °C)	—	16.0 A	
cal_protection_type_iec_60529	IP68	IP65, IP67, IP69K/IP65, IP67, IP69K	
Approval/Conformity	CE, CSA, cURus, EAC, WEEE	CE, EAC, WEEE	
Productview	Page 170	Page 170	

	BCC0L2Z BCC M415-M415-3L-386-PX85A5-020	BCC0L30 BCC M415-M415-3L-386-PX85A5-050	BCC0L31 BCC M415-M415-3L-386-PX85A5-100	BCC0L32 BCC M415-M415-3L-386-PX85A5-150
	M12x1-Female, straight, 5-pin, L-coded	M12x1-Female, straight, 5-pin, L-coded	M12x1-Female, straight, 5-pin, L-coded	M12x1-Female, straight, 5-pin, L-coded
	M12x1-Male, straight, 5-pin, L-coded	M12x1-Male, straight, 5-pin, L-coded	M12x1-Male, straight, 5-pin, L-coded	M12x1-Male, straight, 5-pin, L-coded
	—	—	—	—
	—	—	—	—
	—	—	—	—
	—	—	—	—
	—	—	—	—
	—	—	—	—
	PUR gray, 2.00 m, Drag chain compatible	PUR gray, 5.00 m, Drag chain compatible	PUR gray, 10.00 m, Drag chain compatible	PUR gray, 15.00 m, Drag chain compatible
	5	5	5	5
	-40...90 °C	-40...90 °C	-40...90 °C	-40...90 °C
	-20...80 °C	-20...80 °C	-20...80 °C	-20...80 °C
	60 VDC / 50 VAC	60 VDC / 50 VAC	60 VDC / 50 VAC	60 VDC / 50 VAC
	16.0 A	16.0 A	16.0 A	16.0 A
	IP65, IP67, IP69K/IP65, IP67, IP69K	IP65, IP67, IP69K/IP65, IP67, IP69K	IP65, IP67, IP69K/IP65, IP67, IP69K	IP65, IP67, IP69K/IP65, IP67, IP69K
	CE, EAC, WEEE	CE, EAC, WEEE	CE, EAC, WEEE	CE, EAC, WEEE
	Page 170	Page 170	Page 170	Page 170

	BCC0L3H BCC M415-M425-3L-386-PX85A5-006	BCC0L3J BCC M415-M425-3L-386-PX85A5-020	
Connection 1	M12x1-Female, straight, 5-pin, L-coded	M12x1-Female, straight, 5-pin, L-coded	
Connection 2	M12x1-Male, angled, 5-pin, L-coded	M12x1-Male, angled, 5-pin, L-coded	
Power indicator	—	—	
Function indicator (Pin 2)	—	—	
Function indicator (Pin 3)	—	—	
Function indicator (Pin 4)	—	—	
Suppressor	—	—	
Interface	—	—	
Cable	PUR gray, 0.60 m, Drag chain compatible	PUR gray, 2.00 m, Drag chain compatible	
Number of conductors	5	5	
Cable temperature, fixed routing	-40...90 °C	-40...90 °C	
Cable temperature, flexible routing	-20...80 °C	-20...80 °C	
Operating voltage Ub	60 VDC / 50 VAC	60 VDC / 50 VAC	
Rated current (40 °C)	16.0 A	16.0 A	
cal_protection_type_iec_60529	IP65, IP67, IP69K/IP65, IP67, IP69K	IP65, IP67, IP69K/IP65, IP67, IP69K	
Approval/Conformity	CE, EAC, WEEE	CE, EAC, WEEE	
Productview	Page 170	Page 170	

	BCC0L3K BCC M415-M425-3L-386-PX85A5-050	BCC0L3L BCC M415-M425-3L-386-PX85A5-100	BCC0L3M BCC M415-M425-3L-386-PX85A5-150	BCC0L3N BCC M425-M415-3L-386-PX85A5-006
	M12x1-Female, straight, 5-pin, L-coded	M12x1-Female, straight, 5-pin, L-coded	M12x1-Female, straight, 5-pin, L-coded	M12x1-Female, angled, 5-pin, L-coded
	M12x1-Male, angled, 5-pin, L-coded	M12x1-Male, angled, 5-pin, L-coded	M12x1-Male, angled, 5-pin, L-coded	M12x1-Male, straight, 5-pin, L-coded
	—	—	—	—
	—	—	—	—
	—	—	—	—
	—	—	—	—
	—	—	—	—
	—	—	—	—
	PUR gray, 5.00 m, Drag chain compatible	PUR gray, 10.00 m, Drag chain compatible	PUR gray, 15.00 m, Drag chain compatible	PUR gray, 0.60 m, Drag chain compatible
	5	5	5	5
	-40...90 °C	-40...90 °C	-40...90 °C	-40...90 °C
	-20...80 °C	-20...80 °C	-20...80 °C	-20...80 °C
	60 VDC / 50 VAC	60 VDC / 50 VAC	60 VDC / 50 VAC	60 VDC / 50 VAC
	16.0 A	16.0 A	16.0 A	16.0 A
	IP65, IP67, IP69K/IP65, IP67, IP69K	IP65, IP67, IP69K/IP65, IP67, IP69K	IP65, IP67, IP69K/IP65, IP67, IP69K	IP65, IP67, IP69K/IP65, IP67, IP69K
	CE, EAC, WEEE	CE, EAC, WEEE	CE, EAC, WEEE	CE, EAC, WEEE
	Page 170	Page 170	Page 170	Page 170

	BCC0L3P BCC M425-M415-3L-386-PX85A5-020	BCC0L3R BCC M425-M415-3L-386-PX85A5-050	
Connection 1	M12x1-Female, angled, 5-pin, L-coded	M12x1-Female, angled, 5-pin, L-coded	
Connection 2	M12x1-Male, straight, 5-pin, L-coded	M12x1-Male, straight, 5-pin, L-coded	
Power indicator	—	—	
Function indicator (Pin 2)	—	—	
Function indicator (Pin 3)	—	—	
Function indicator (Pin 4)	—	—	
Suppressor	—	—	
Interface	—	—	
Cable	PUR gray, 2.00 m, Drag chain compatible	PUR gray, 5.00 m, Drag chain compatible	
Number of conductors	5	5	
Cable temperature, fixed routing	-40...90 °C	-40...90 °C	
Cable temperature, flexible routing	-20...80 °C	-20...80 °C	
Operating voltage Ub	60 VDC / 50 VAC	60 VDC / 50 VAC	
Rated current (40 °C)	16.0 A	16.0 A	
cal_protection_type_iec_60529	IP65, IP67, IP69K/IP65, IP67, IP69K	IP65, IP67, IP69K/IP65, IP67, IP69K	
Approval/Conformity	CE, EAC, WEEE	CE, EAC, WEEE	
Productview	Page 170	Page 170	

	BCC0L3T BCC M425-M415-3L-386-PX85A5-100	BCC0L3U BCC M425-M415-3L-386-PX85A5-150	BCC0L33 BCC M425-M425-3L-386-PX85A5-006	BCC0L34 BCC M425-M425-3L-386-PX85A5-020
	M12x1-Female, angled, 5-pin, L-coded	M12x1-Female, angled, 5-pin, L-coded	M12x1-Female, angled, 5-pin, L-coded	M12x1-Female, angled, 5-pin, L-coded
	M12x1-Male, straight, 5-pin, L-coded	M12x1-Male, straight, 5-pin, L-coded	M12x1-Male, angled, 5-pin, L-coded	M12x1-Male, angled, 5-pin, L-coded
	—	—	—	—
	—	—	—	—
	—	—	—	—
	—	—	—	—
	—	—	—	—
	—	—	—	—
	PUR gray, 10.00 m, Drag chain compatible	PUR gray, 15.00 m, Drag chain compatible	PUR gray, 0.60 m, Drag chain compatible	PUR gray, 2.00 m, Drag chain compatible
	5	5	5	5
	-40...90 °C	-40...90 °C	-40...90 °C	-40...90 °C
	-20...80 °C	-20...80 °C	-20...80 °C	-20...80 °C
	60 VDC / 50 VAC	60 VDC / 50 VAC	60 VDC / 50 VAC	60 VDC / 50 VAC
	16.0 A	16.0 A	16.0 A	16.0 A
	IP65, IP67, IP69K/IP65, IP67, IP69K	IP65, IP67, IP69K/IP65, IP67, IP69K	IP65, IP67, IP69K/IP65, IP67, IP69K	IP65, IP67, IP69K/IP65, IP67, IP69K
	CE, EAC, WEEE	CE, EAC, WEEE	CE, EAC, WEEE	CE, EAC, WEEE
	Page 170	Page 170	Page 170	Page 170

	BCC0L35 BCC M425-M425-3L-386-PX85A5-050	BCC0L36 BCC M425-M425-3L-386-PX85A5-100	
Connection 1	M12x1-Female, angled, 5-pin, L-coded	M12x1-Female, angled, 5-pin, L-coded	
Connection 2	M12x1-Male, angled, 5-pin, L-coded	M12x1-Male, angled, 5-pin, L-coded	
Power indicator	—	—	
Function indicator (Pin 2)	—	—	
Function indicator (Pin 3)	—	—	
Function indicator (Pin 4)	—	—	
Suppressor	—	—	
Interface	—	—	
Cable	PUR gray, 5.00 m, Drag chain compatible	PUR gray, 10.00 m, Drag chain compatible	
Number of conductors	5	5	
Cable temperature, fixed routing	-40...90 °C	-40...90 °C	
Cable temperature, flexible routing	-20...80 °C	-20...80 °C	
Operating voltage Ub	60 VDC / 50 VAC	60 VDC / 50 VAC	
Rated current (40 °C)	16.0 A	16.0 A	
cal_protection_type_iec_60529	IP65, IP67, IP69K/IP65, IP67, IP69K	IP65, IP67, IP69K/IP65, IP67, IP69K	
Approval/Conformity	CE, EAC, WEEE	CE, EAC, WEEE	
Productview	Page 170	Page 170	

	BCC0L37 BCC M425-M425-3L-386-PX85A5-150	BCC00R8 BIS Z-501-PU1-02/M	BCC00R9 BIS Z-501-PU1-05/E	BCC00RA BIS Z-501-PU1-05/M
	M12x1-Female, angled, 5-pin, L-coded	M12x1-Female, straight, 8-pin, A-coded	M12x1-Female, straight, 8-pin, A-coded	M12x1-Female, straight, 8-pin, A-coded
	M12x1-Male, angled, 5-pin, L-coded	M12x1-Male, straight, 8-pin, A-coded	M12x1-Male, straight, 8-pin, A-coded	M12x1-Male, straight, 8-pin, A-coded
	—	—	—	—
	—	—	—	—
	—	—	—	—
	—	—	—	—
	—	—	—	—
	—	—	—	—
	PUR gray, 15.00 m, Drag chain compatible	PUR Shielded black, 2.00 m, Drag chain compatible	PUR Shielded black, 5.00 m, Drag chain compatible	PUR Shielded black, 5.00 m, Drag chain compatible
	5	8	8	8
	-40...90 °C	-50...80 °C	-50...80 °C	-50...80 °C
	-20...80 °C	-25...80 °C	-25...80 °C	-25...80 °C
	60 VDC / 50 VAC	30 VDC / 30 VAC	30 VDC / 30 VAC	30 VDC / 30 VAC
	16.0 A	2.0 A	2.0 A	2.0 A
	IP65, IP67, IP69K/IP65, IP67, IP69K	IP67/IP67	IP67/IP67	IP67/IP67
	CE, EAC, WEEE	CE, EAC, WEEE	CE, EAC, WEEE	CE, EAC, WEEE
	Page 170	Page 170	Page 170	Page 170

	BCC00RC BIS Z-501-PU1-10/E	BCC088T BCC M62C-M41C-3E-675-PX0C25-010	
Connection 1	M12x1-Female, straight, 8-pin, A-coded	M23x1-Female, angled, 12-pin	
Connection 2	M12x1-Male, straight, 8-pin, A-coded	M12x1-Male, straight, 12-pin, A-coded	
Power indicator	—	—	
Function indicator (Pin 2)	—	—	
Function indicator (Pin 3)	—	—	
Function indicator (Pin 4)	—	—	
Suppressor	—	—	
Interface	—	—	
Cable	PUR Shielded black, 10.00 m, Drag chain compatible	PUR black, 1.00 m, Drag chain compatible	
Number of conductors	8	12	
Cable temperature, fixed routing	-50...80 °C	-50...80 °C	
Cable temperature, flexible routing	-25...80 °C	-25...80 °C	
Operating voltage Ub	30 VDC / 30 VAC	30 VDC / 30 VAC	
Rated current (40 °C)	2.0 A	1.5 A	
cal_protection_type_iec_60529	IP67/IP67	IP67/IP68	
Approval/Conformity	CE, EAC, WEEE	CE, EAC, WEEE	
Productview	Page 170	Page 170	

	BCC088U BCC M62C-M41C-3E-675-PX0C25-020	BCC0LUK BCC M414-M415-3L-304-PX04A5-006	BCC0LUL BCC M414-M415-3L-304-PX04A5-020	BCC0LUM BCC M414-M415-3L-304-PX04A5-050
	M23x1-Female, angled, 12-pin	M12x1-Female, Straight, 4-pin, L-coded	M12x1-Female, Straight, 4-pin, L-coded	M12x1-Female, Straight, 4-pin, L-coded
	M12x1-Male, straight, 12-pin, A-coded	M12x1-Male, Straight, 5-pin, L-coded	M12x1-Male, Straight, 5-pin, L-coded	M12x1-Male, Straight, 5-pin, L-coded
	—	—	—	—
	—	—	—	—
	—	—	—	—
	—	—	—	—
	—	—	—	—
	—	—	—	—
	PUR black, 2.00 m, Drag chain compatible	PUR black, 0.6 m, Drag chain compatible	PUR black, 2 m, Drag chain compatible	PUR black, 5 m, Drag chain compatible
	12	4	4	4
	-50...80 °C	-50...80 °C	-50...80 °C	-50...80 °C
	-25...80 °C	-30...80 °C	-30...80 °C	-30...80 °C
	30 VDC / 30 VAC	60 VDC / 50 VAC	60 VDC / 50 VAC	60 VDC / 50 VAC
	1.5 A	16.0 A	16.0 A	16.0 A
	IP67/IP68	IP65, IP67, IP69K/IP65, IP67, IP69K	IP65, IP67, IP69K/IP65, IP67, IP69K	IP65, IP67, IP69K/IP65, IP67, IP69K
	CE, EAC, WEEE	CE, EAC, WEEE	CE, EAC, WEEE	CE, EAC, WEEE
	Page 170	Page 171	Page 171	Page 171

	BCC0LUN BCC M414-M415-3L-304-PX04A5-100	BCC0LUP BCC M414-M415-3L-304-PX04A5-150	
Connection 1	M12x1-Female, Straight, 4-pin, L-coded	M12x1-Female, Straight, 4-pin, L-coded	
Connection 2	M12x1-Male, Straight, 5-pin, L-coded	M12x1-Male, Straight, 5-pin, L-coded	
Power indicator	—	—	
Function indicator (Pin 2)	—	—	
Function indicator (Pin 3)	—	—	
Function indicator (Pin 4)	—	—	
Suppressor	—	—	
Interface	—	—	
Cable	PUR black, 10 m, Drag chain compatible	PUR black, 15 m, Drag chain compatible	
Number of conductors	4	4	
Cable temperature, fixed routing	-50...80 °C	-50...80 °C	
Cable temperature, flexible routing	-30...80 °C	-30...80 °C	
Operating voltage Ub	60 VDC / 50 VAC	60 VDC / 50 VAC	
Rated current (40 °C)	16.0 A	16.0 A	
cal_protection_type_iec_60529	IP65, IP67, IP69K/IP65, IP67, IP69K	IP65, IP67, IP69K/IP65, IP67, IP69K	
Approval/Conformity	CE, EAC, WEEE	CE, EAC, WEEE	
Productview	Page 171	Page 171	

	BCC0LW0 BCC M424-M425-3L-304-PX04A5-006	BCC0LW1 BCC M424-M425-3L-304-PX04A5-020	BCC0LW2 BCC M424-M425-3L-304-PX04A5-050	BCC0LW3 BCC M424-M425-3L-304-PX04A5-100
	M12x1-Female, right-angle, 4-pin, L-coded	M12x1-Female, right-angle, 4-pin, L-coded	M12x1-Female, right-angle, 4-pin, L-coded	M12x1-Female, right-angle, 4-pin, L-coded
	M12x1-Male, right-angle, 5-pin, L-coded	M12x1-Male, right-angle, 5-pin, L-coded	M12x1-Male, right-angle, 5-pin, L-coded	M12x1-Male, right-angle, 5-pin, L-coded
	—	—	—	—
	—	—	—	—
	—	—	—	—
	—	—	—	—
	—	—	—	—
	—	—	—	—
	PUR black, 0.6 m, Drag chain compatible	PUR black, 2 m, Drag chain compatible	PUR black, 5 m, Drag chain compatible	PUR black, 10 m, Drag chain compatible
	4	4	4	4
	-50...80 °C	-50...80 °C	-50...80 °C	-50...80 °C
	-30...80 °C	-30...80 °C	-30...80 °C	-30...80 °C
	60 VDC / 50 VAC	60 VDC / 50 VAC	60 VDC / 50 VAC	60 VDC / 50 VAC
	16.0 A	16.0 A	16.0 A	16.0 A
	IP65, IP67, IP69K/IP65, IP67, IP69K	IP65, IP67, IP69K/IP65, IP67, IP69K	IP65, IP67, IP69K/IP65, IP67, IP69K	IP65, IP67, IP69K/IP65, IP67, IP69K
	CE, EAC, WEEE	CE, EAC, WEEE	CE, EAC, WEEE	CE, EAC, WEEE
	Page 171	Page 171	Page 171	Page 171

	BCC0LW4 BCC M424-M425-3L-304-PX04A5-150	BCC0JRY BCC S4B5-S4B4-3A-304-YX8434-006-C009	
Connection 1	M12x1-Female, right-angle, 4-pin, L-coded	M12x1-Female, straight, 5-pin, A-coded	
Connection 2	M12x1-Male, right-angle, 5-pin, L-coded	M12x1-Male, straight, 4-pin, A-coded	
Power indicator	—	—	
Function indicator (Pin 2)	—	—	
Function indicator (Pin 3)	—	—	
Function indicator (Pin 4)	—	—	
Suppressor	—	—	
Interface	—	—	
Cable	PUR black, 15 m, Drag chain compatible	TPE-V gray, 0.6 m	
Number of conductors	4	4	
Cable temperature, fixed routing	-50...80 °C	-50...105 °C	
Cable temperature, flexible routing	-30...80 °C	-25...105 °C	
Operating voltage Ub	60 VDC / 50 VAC	250 VDC / 250 VAC	
Rated current (40 °C)	16.0 A	4.0 A	
cal_protection_type_iec_60529	IP65, IP67, IP69K/IP65, IP67, IP69K	IP67, IP69K/IP67, IP69K	
Approval/Conformity	CE, EAC, WEEE	FDA compliant, EAC, Ecolab, WEEE	
Productview	Page 171	Page 171	

	BCC0KT3 BCC S4B5-S4B4-3A-304-YX8434-010-C009	BCC0JRZ BCC S4B5-S4B4-3A-304-YX8434-020-C009	BCC0KRM BCC S4B5-S4B4-3A-304-YX8434-030-C009	BCC0JT0 BCC S4B5-S4B4-3A-304-YX8434-050-C009
	M12x1-Female, straight, 5-pin, A-coded	M12x1-Female, straight, 5-pin, A-coded	M12x1-Female, straight, 5-pin, A-coded	M12x1-Female, straight, 5-pin, A-coded
	M12x1-Male, straight, 4-pin, A-coded	M12x1-Male, straight, 4-pin, A-coded	M12x1-Male, straight, 4-pin, A-coded	M12x1-Male, straight, 4-pin, A-coded
	—	—	—	—
	—	—	—	—
	—	—	—	—
	—	—	—	—
	—	—	—	—
	—	—	—	—
	TPE-V gray, 1 m	TPE-V gray, 2 m	TPE-V gray, 3 m	TPE-V gray, 5 m
	4	4	4	4
	-50...105 °C	-50...105 °C	-50...105 °C	-50...105 °C
	-25...105 °C	-25...105 °C	-25...105 °C	-25...105 °C
	250 VDC / 250 VAC	250 VDC / 250 VAC	250 VDC / 250 VAC	250 VDC / 250 VAC
	4.0 A	4.0 A	4.0 A	4.0 A
	IP67, IP69K/IP67, IP69K	IP67, IP69K/IP67, IP69K	IP67, IP69K/IP67, IP69K	IP67, IP69K/IP67, IP69K
	FDA compliant, EAC, Ecolab, WEEE	FDA compliant, EAC, Ecolab, WEEE	FDA compliant, EAC, Ecolab, WEEE	FDA compliant, EAC, Ecolab, WEEE
	Page 171	Page 171	Page 171	Page 171

	BCC0JT1 BCC S4B5-S4B4-3A-304-YX8434-100-C009	BCC0JT2 BCC S4B5-S4B4-3A-304-YX8434-150-C009	
Connection 1	M12x1-Female, straight, 5-pin, A-coded	M12x1-Female, straight, 5-pin, A-coded	
Connection 2	M12x1-Male, straight, 4-pin, A-coded	M12x1-Male, straight, 4-pin, A-coded	
Power indicator	—	—	
Function indicator (Pin 2)	—	—	
Function indicator (Pin 3)	—	—	
Function indicator (Pin 4)	—	—	
Suppressor	—	—	
Interface	—	—	
Cable	TPE-V gray, 10 m	TPE-V gray, 15 m	
Number of conductors	4	4	
Cable temperature, fixed routing	-50...105 °C	-50...105 °C	
Cable temperature, flexible routing	-25...105 °C	-25...105 °C	
Operating voltage Ub	250 VDC / 250 VAC	250 VDC / 250 VAC	
Rated current (40 °C)	4.0 A	4.0 A	
cal_protection_type_iec_60529	IP67, IP69K/IP67, IP69K	IP67, IP69K/IP67, IP69K	
Approval/Conformity	FDA compliant, EAC, Ecolab, WEEE	FDA compliant, EAC, Ecolab, WEEE	
Productview	Page 171	Page 171	

	BCC0JT3 BCC S4B5-S4B4-3A-304-YX8434-200-C009	BCC0JTP BCC C3B4-C3B4-30-304-YX84A5-006-C009	BCC0JTR BCC C3B4-C3B4-30-304-YX84A5-020-C009	BCC0JTT BCC C3B4-C3B4-30-304-YX84A5-050-C009
	M12x1-Female, straight, 5-pin, A-coded	7/8“-Female, straight, 4-pin	7/8“-Female, straight, 4-pin	7/8“-Female, straight, 4-pin
	M12x1-Male, straight, 4-pin, A-coded	7/8“-Male, straight, 4-pin	7/8“-Male, straight, 4-pin	7/8“-Male, straight, 4-pin
	–	–	–	–
	–	–	–	–
	–	–	–	–
	–	–	–	–
	–	–	–	–
	–	–	–	–
	TPE-V gray, 20 m	TPE-V gray, 0.6 m	TPE-V gray, 2 m	TPE-V gray, 5 m
	4	4	4	4
	-50...105 °C	-50...105 °C	-50...105 °C	-50...105 °C
	-25...105 °C	-25...105 °C	-25...105 °C	-25...105 °C
	250 VDC / 250 VAC	300 VDC / 300 VAC	300 VDC / 300 VAC	300 VDC / 300 VAC
	4.0 A	10.0 A	10.0 A	10.0 A
	IP67, IP69K/IP67, IP69K	IP69K/IP69K	IP69K/IP69K	IP69K/IP69K
	FDA compliant, EAC, Ecolab, WEEE	FDA compliant, EAC, Ecolab, WEEE	FDA compliant, EAC, Ecolab, WEEE	FDA compliant, EAC, Ecolab, WEEE
	Page 171	Page 171	Page 171	Page 171

	BCC0JTU BCC C3B4-C3B4-30-304-YX84A5-100-C009	BCC0JTW BCC C3B4-C3B4-30-304-YX84A5-150-C009	
Connection 1	7/8“-Female, straight, 4-pin	7/8“-Female, straight, 4-pin	
Connection 2	7/8“-Male, straight, 4-pin	7/8“-Male, straight, 4-pin	
Power indicator	—	—	
Function indicator (Pin 2)	—	—	
Function indicator (Pin 3)	—	—	
Function indicator (Pin 4)	—	—	
Suppressor	—	—	
Interface	—	—	
Cable	TPE-V gray, 10 m	TPE-V gray, 15 m	
Number of conductors	4	4	
Cable temperature, fixed routing	-50...105 °C	-50...105 °C	
Cable temperature, flexible routing	-25...105 °C	-25...105 °C	
Operating voltage Ub	300 VDC / 300 VAC	300 VDC / 300 VAC	
Rated current (40 °C)	10.0 A	10.0 A	
cal_protection_type_iec_60529	IP69K/IP69K	IP69K/IP69K	
Approval/Conformity	FDA compliant, EAC, Ecolab, WEEE	FDA compliant, EAC, Ecolab, WEEE	
Productview	Page 171	Page 171	

	BCC0JTY BCC C3B4-C3B4-30-304-YX84A5-200-C009	BCC0LNE BCC C3C4-C3C4-30-304-YX84A5-020-C009	BCC0LNF BCC C3C4-C3C4-30-304-YX84A5-050-C009	BCC0JT4 BCC S4B5-S4B5-3A-313-YX8534-006-C009
	7/8“-Female, straight, 4-pin	7/8“-Female, right-angle, 4-pin	7/8“-Female, right-angle, 4-pin	M12x1-Female, straight, 5-pin, A-coded
	7/8“-Male, straight, 4-pin	7/8“-Male, right-angle, 4-pin	7/8“-Male, right-angle, 4-pin	M12x1-Male, straight, 5-pin, A-coded
	—	—	—	—
	—	—	—	—
	—	—	—	—
	—	—	—	—
	—	—	—	—
	—	—	—	—
	TPE-V gray, 20 m	TPE-V gray, 2 m	TPE-V gray, 5 m	TPE-V gray, 0.6 m
	4	4	4	5
	-50...105 °C	-50...105 °C	-50...105 °C	-50...105 °C
	-25...105 °C	-25...105 °C	-25...105 °C	-25...105 °C
	300 VDC / 300 VAC	300 VDC / 300 VAC	300 VDC / 300 VAC	60 VDC / 60 VAC
	10.0 A	10.0 A	10.0 A	4.0 A
	IP69K/IP69K	IP69K/IP69K	IP69K/IP69K	IP67, IP69K/IP67, IP69K
	FDA compliant, EAC, Ecolab, WEEE	FDA compliant, Ecolab, EAC, WEEE	FDA compliant, Ecolab, EAC, WEEE	FDA compliant, CE, EAC, Ecolab, WEEE
	Page 171	Page 171	Page 171	Page 171

	BCC0JT5 BCC S4B5-S4B5-3A-313-YX8534-020-C009	BCC0JT6 BCC S4B5-S4B5-3A-313-YX8534-050-C009	
Connection 1	M12x1-Female, straight, 5-pin, A-coded	M12x1-Female, straight, 5-pin, A-coded	
Connection 2	M12x1-Male, straight, 5-pin, A-coded	M12x1-Male, straight, 5-pin, A-coded	
Power indicator	—	—	
Function indicator (Pin 2)	—	—	
Function indicator (Pin 3)	—	—	
Function indicator (Pin 4)	—	—	
Suppressor	—	—	
Interface	—	—	
Cable	TPE-V gray, 2 m	TPE-V gray, 5 m	
Number of conductors	5	5	
Cable temperature, fixed routing	-50...105 °C	-50...105 °C	
Cable temperature, flexible routing	-25...105 °C	-25...105 °C	
Operating voltage Ub	60 VDC / 60 VAC	60 VDC / 60 VAC	
Rated current (40 °C)	4.0 A	4.0 A	
cal_protection_type_iec_60529	IP67, IP69K/IP67, IP69K	IP67, IP69K/IP67, IP69K	
Approval/Conformity	FDA compliant, CE, EAC, Ecolab, WEEE	FDA compliant, CE, EAC, Ecolab, WEEE	
Productview	Page 171	Page 171	

	BCC0JT7 BCC S4B5-S4B5-3A-313-YX8534-100-C009	BCC0JT8 BCC S4B5-S4B5-3A-313-YX8534-150-C009	BCC0JT9 BCC S4B5-S4B5-3A-313-YX8534-200-C009	BCC0JTZ BCC C3B5-C3B5-30-335-YX85A5-006-C009
	M12x1-Female, straight, 5-pin, A-coded	M12x1-Female, straight, 5-pin, A-coded	M12x1-Female, straight, 5-pin, A-coded	7/8“-Female, straight, 5-pin
	M12x1-Male, straight, 5-pin, A-coded	M12x1-Male, straight, 5-pin, A-coded	M12x1-Male, straight, 5-pin, A-coded	7/8“-Male, straight, 5-pin
	—	—	—	—
	—	—	—	—
	—	—	—	—
	—	—	—	—
	—	—	—	—
	—	—	—	—
	TPE-V gray, 10 m	TPE-V gray, 15 m	TPE-V gray, 20 m	TPE-V gray, 0.6 m
	5	5	5	5
	-50...105 °C	-50...105 °C	-50...105 °C	-50...105 °C
	-25...105 °C	-25...105 °C	-25...105 °C	-25...105 °C
	60 VDC / 60 VAC	60 VDC / 60 VAC	60 VDC / 60 VAC	300 VDC / 300 VAC
	4.0 A	4.0 A	4.0 A	9.0 A
	IP67, IP69K/IP67, IP69K	IP67, IP69K/IP67, IP69K	IP67, IP69K/IP67, IP69K	IP69K/IP69K
	FDA compliant, CE, EAC, Ecolab, WEEE	FDA compliant, CE, EAC, Ecolab, WEEE	FDA compliant, CE, EAC, Ecolab, WEEE	FDA compliant, EAC, Ecolab, WEEE
	Page 171	Page 171	Page 171	Page 171

	BCC0JU0 BCC C3B5-C3B5-30-335-YX85A5-020-C009	BCC0JU1 BCC C3B5-C3B5-30-335-YX85A5-050-C009	
Connection 1	7/8“-Female, straight, 5-pin	7/8“-Female, straight, 5-pin	
Connection 2	7/8“-Male, straight, 5-pin	7/8“-Male, straight, 5-pin	
Power indicator	—	—	
Function indicator (Pin 2)	—	—	
Function indicator (Pin 3)	—	—	
Function indicator (Pin 4)	—	—	
Suppressor	—	—	
Interface	—	—	
Cable	TPE-V gray, 2 m	TPE-V gray, 5 m	
Number of conductors	5	5	
Cable temperature, fixed routing	-50...105 °C	-50...105 °C	
Cable temperature, flexible routing	-25...105 °C	-25...105 °C	
Operating voltage Ub	300 VDC / 300 VAC	300 VDC / 300 VAC	
Rated current (40 °C)	9.0 A	9.0 A	
cal_protection_type_iec_60529	IP69K/IP69K	IP69K/IP69K	
Approval/Conformity	FDA compliant, EAC, Ecolab, WEEE	FDA compliant, EAC, Ecolab, WEEE	
Productview	Page 171	Page 171	

	BCC0JU2 BCC C3B5-C3B5-30-335-YX85A5-100-C009	BCC0JU3 BCC C3B5-C3B5-30-335-YX85A5-150-C009	BCC0JU4 BCC C3B5-C3B5-30-335-YX85A5-200-C009	BCC0JW3 BCC S4B8-S4B8-3A-321-YX8825-006-C009
	7/8“-Female, straight, 5-pin	7/8“-Female, straight, 5-pin	7/8“-Female, straight, 5-pin	M12x1-Female, straight, 8-pin, A-coded
	7/8“-Male, straight, 5-pin	7/8“-Male, straight, 5-pin	7/8“-Male, straight, 5-pin	M12x1-Male, straight, 8-pin, A-coded
	—	—	—	—
	—	—	—	—
	—	—	—	—
	—	—	—	—
	—	—	—	—
	—	—	—	—
	TPE-V gray, 10 m	TPE-V gray, 15 m	TPE-V gray, 20 m	TPE-V gray, 0.6 m
	5	5	5	8
	-50...105 °C	-50...105 °C	-50...105 °C	-50...105 °C
	-25...105 °C	-25...105 °C	-25...105 °C	-25...105 °C
	300 VDC / 300 VAC	300 VDC / 300 VAC	300 VDC / 300 VAC	30 VDC / 30 VAC
	9.0 A	9.0 A	9.0 A	2.0 A
	IP69K/IP69K	IP69K/IP69K	IP69K/IP69K	IP67, IP69K/IP67, IP69K
	FDA compliant, EAC, Ecolab, WEEE	FDA compliant, EAC, Ecolab, WEEE	FDA compliant, EAC, Ecolab, WEEE	FDA compliant, CE, EAC, Ecolab, WEEE
	Page 171	Page 171	Page 171	Page 171

	BCC0JW4 BCC S4B8-S4B8-3A-321-YX8825-020-C009	BCC0JW5 BCC S4B8-S4B8-3A-321-YX8825-050-C009	
Connection 1	M12x1-Female, straight, 8-pin, A-coded	M12x1-Female, straight, 8-pin, A-coded	
Connection 2	M12x1-Male, straight, 8-pin, A-coded	M12x1-Male, straight, 8-pin, A-coded	
Power indicator	—	—	
Function indicator (Pin 2)	—	—	
Function indicator (Pin 3)	—	—	
Function indicator (Pin 4)	—	—	
Suppressor	—	—	
Interface	—	—	
Cable	TPE-V gray, 2 m	TPE-V gray, 5 m	
Number of conductors	8	8	
Cable temperature, fixed routing	-50...105 °C	-50...105 °C	
Cable temperature, flexible routing	-25...105 °C	-25...105 °C	
Operating voltage Ub	30 VDC / 30 VAC	30 VDC / 30 VAC	
Rated current (40 °C)	2.0 A	2.0 A	
cal_protection_type_iec_60529	IP67, IP69K/IP67, IP69K	IP67, IP69K/IP67, IP69K	
Approval/Conformity	FDA compliant, CE, EAC, Ecolab, WEEE	FDA compliant, CE, EAC, Ecolab, WEEE	
Productview	Page 171	Page 171	

	BCC0JW6 BCC S4B8-S4B8-3A-321-YX8825-100-C009	BCC0JW7 BCC S4B8-S4B8-3A-321-YX8825-150-C009	BCC0KL9 BCC U0AA-U019-90-736-Z19004-010	BCC0KLA BCC U0AA-U019-90-736-Z19004-030
	M12x1-Female, straight, 8-pin, A-coded	M12x1-Female, straight, 8-pin, A-coded	USB 3.0 Micro-B-Male, straight, 10-pin	USB 3.0 Micro-B-Male, straight, 10-pin
	M12x1-Male, straight, 8-pin, A-coded	M12x1-Male, straight, 8-pin, A-coded	USB 3.0 Standard-A-Male, straight, 9-pin	USB 3.0 Standard-A-Male, straight, 9-pin
	—	—	—	—
	—	—	—	—
	—	—	—	—
	—	—	—	—
	—	—	—	—
	—	—	—	—
	TPE-V gray, 10 m	TPE-V gray, 15 m	PVC Shielded black, 1.00 m	PVC Shielded black, 3.00 m
	8	8	8	8
	-50...105 °C	-50...105 °C	-10...80 °C	-10...80 °C
	-25...105 °C	-25...105 °C	—	—
	30 VDC / 30 VAC	30 VDC / 30 VAC	5 VDC	5 VDC
	2.0 A	2.0 A	0.1 A	0.1 A
	IP67, IP69K/IP67, IP69K	IP67, IP69K/IP67, IP69K	IP20/IP20	IP20/IP20
	FDA compliant, CE, EAC, Ecolab, WEEE	FDA compliant, CE, EAC, Ecolab, WEEE	EAC, WEEE	EAC, WEEE
	Page 171	Page 171	Page 172	Page 172

	BCCOKLC BCC U0AA-U019-90-736-Z19004-050		
Connection 1	USB 3.0 Micro-B-Male, straight, 10-pin		
Connection 2	USB 3.0 Standard-A-Male, straight, 9-pin		
Power indicator	—		
Function indicator (Pin 2)	—		
Function indicator (Pin 3)	—		
Function indicator (Pin 4)	—		
Suppressor	—		
Interface	—		
Cable	PVC Shielded black, 5.00 m		
Number of conductors	8		
Cable temperature, fixed routing	-10...80 °C		
Cable temperature, flexible routing	—		
Operating voltage Ub	5 VDC		
Rated current (40 °C)	0.1 A		
cal_protection_type_iec_60529	IP20/IP20		
Approval/Conformity	EAC, WEEE		
Productview	Page 172		

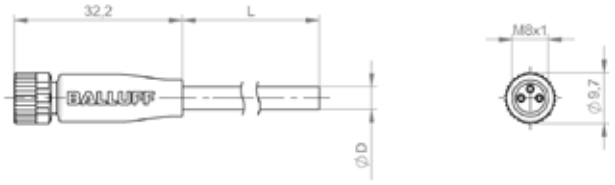

BCC M313-0000-10-001-...
BCC M313-0000-10-004-...

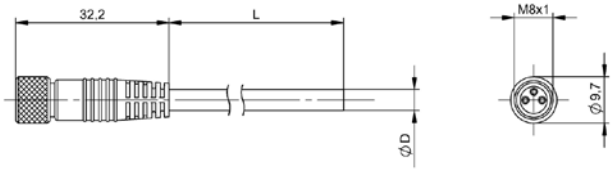

BCC M313-0000-10-036-...

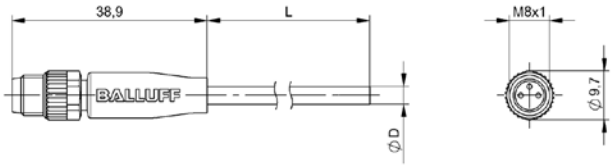

BCC M313-0000-20-001-...

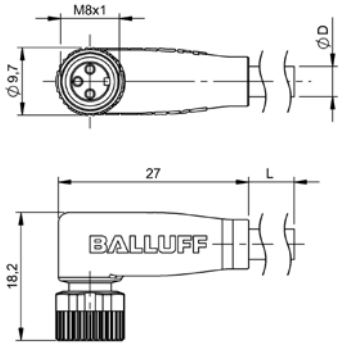

BCC M323-0000-10-001-...
BCC M323-0000-10-004-...
BCC M323-0000-10-006-...

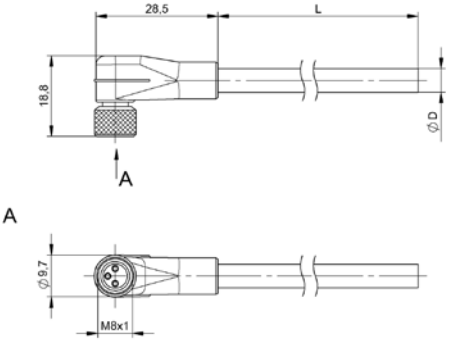

BCC M323-0000-10-036-...

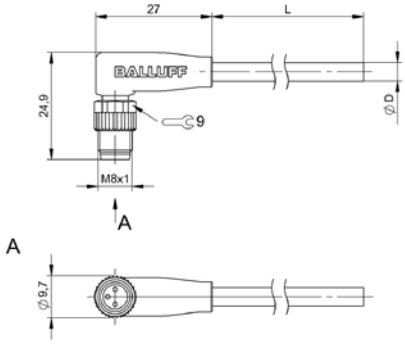

BCC M323-0000-20-001-...

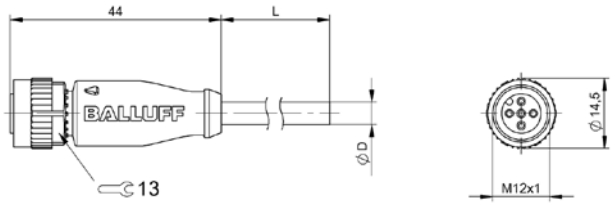

BCC M415-0000-1A-001-...
BCC M415-0000-1A-004-...
BCC M415-0000-1A-002-...
BCC M415-0000-1A-005-...

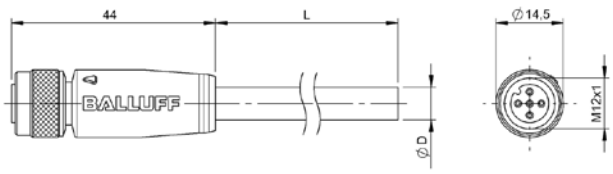

BCC M415-0000-1A-036-...
BCC M415-0000-1A-037-...

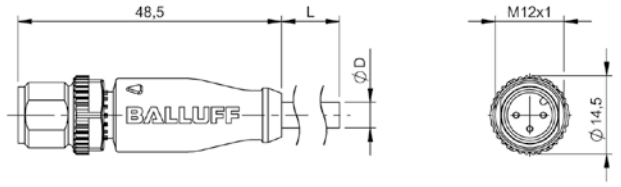

BCC M413-0000-2A-001-...
BCC M413-0000-2A-002-...

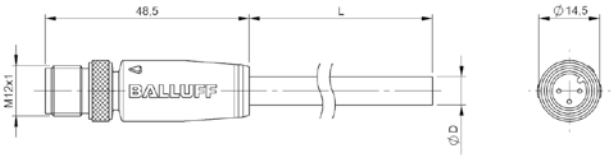

BCC M413-0000-2A-036-...
BCC M413-0000-2A-037-...

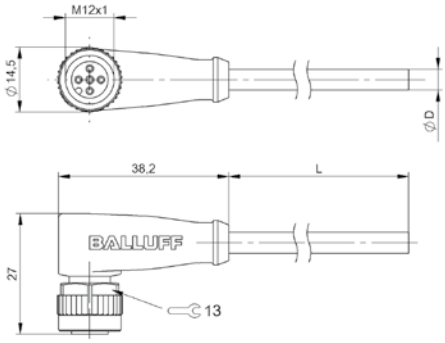

BCC M425-0000-1A-001-...
BCC M425-0000-1A-004-...
BCC M425-0000-1A-006-...
BCC M425-0000-1A-002-...
BCC M425-0000-1A-005-...

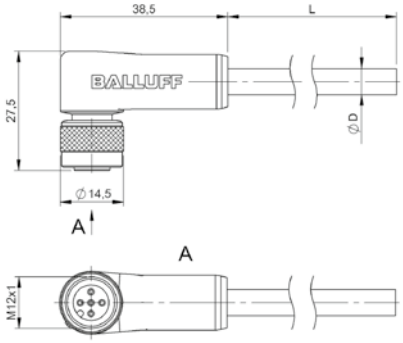

BCC M425-0000-1A-036-...
BCC M425-0000-1A-037-...

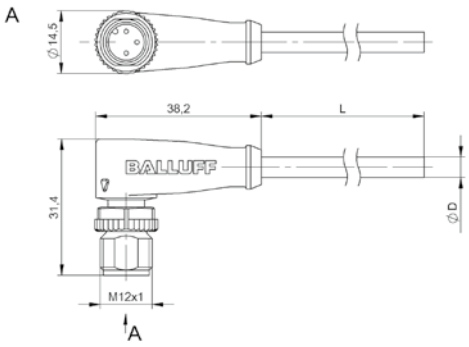

BCC M423-0000-2A-001-...

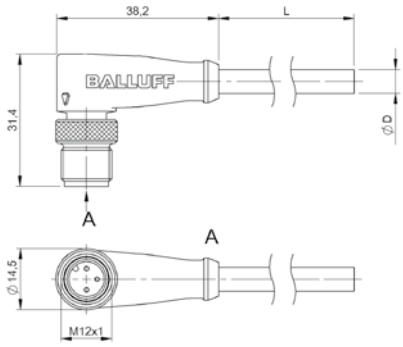

BCC M423-0000-2A-036-...

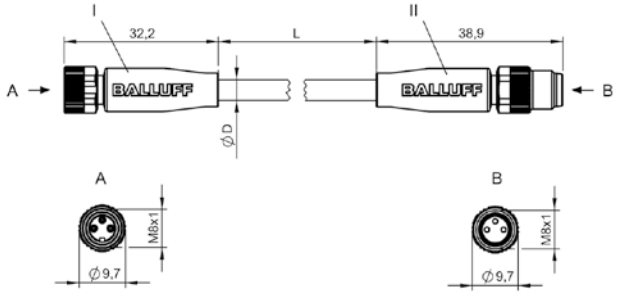

BCC M313-M313-30-300-...

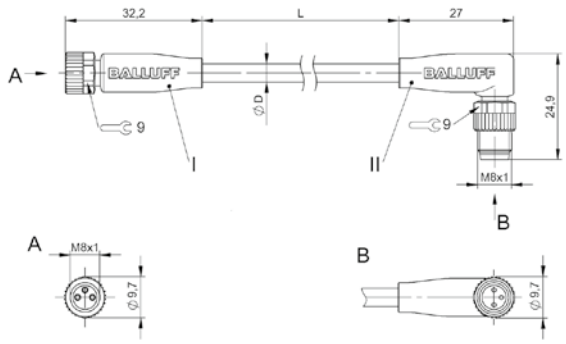

BCC M313-M323-30-300-...

Do you need more details? Our Product Finder at www.balluff.com provides you with product-specific information, including technical drawings, data sheets, user guides and more for each individual product. All items are available for download.

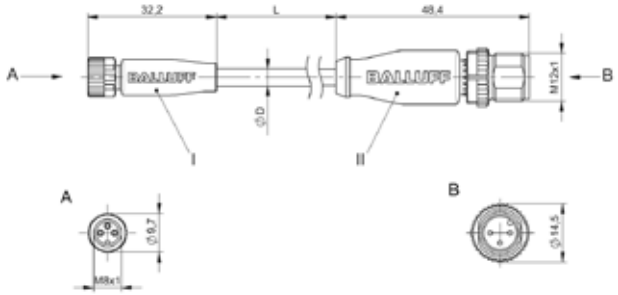

BCC M313-M413-3E-300-...

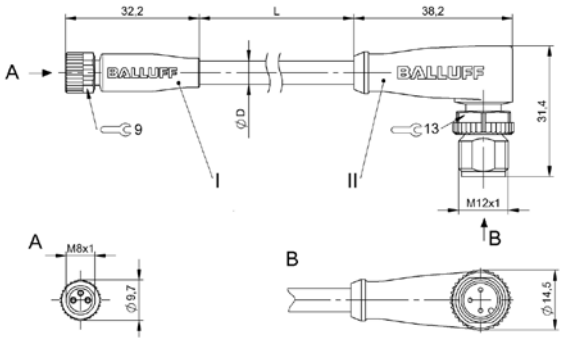

BCC M313-M423-3E-300-...

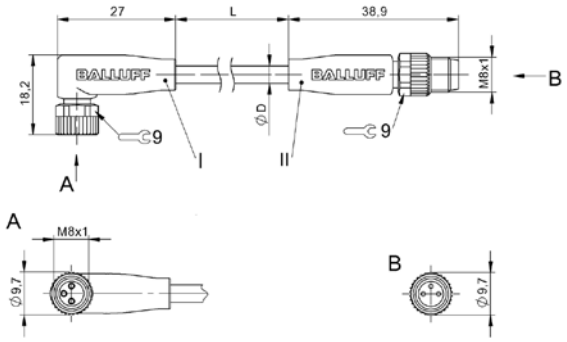

BCC M323-M313-30-300-...
BCC M323-M313-30-602-...

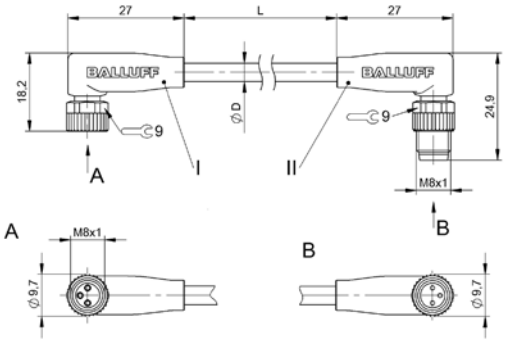

BCC M323-M323-30-300-...

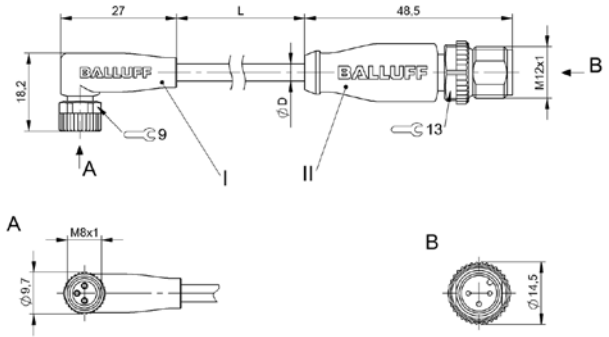

BCC M323-M413-3E-300-...
BCC M323-M413-3E-602-...

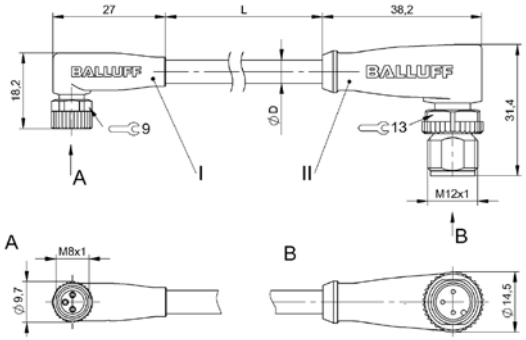

BCC M323-M423-3E-300-...

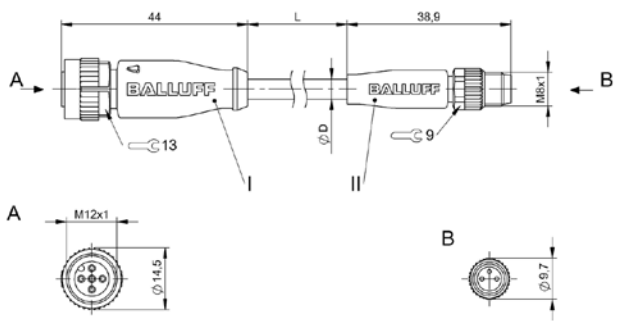

BCC M415-M313-3F-300-...

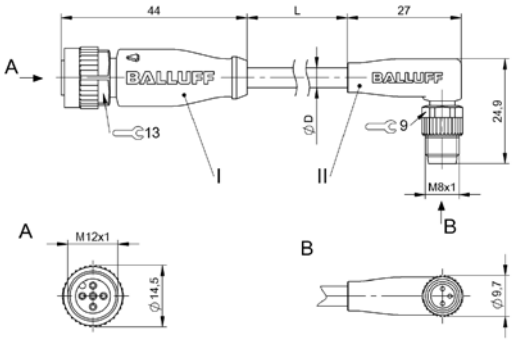

BCC M415-M323-3F-300-...

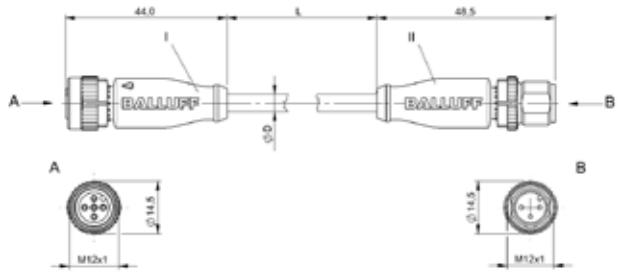

BCC M415-M413-3A-300-...

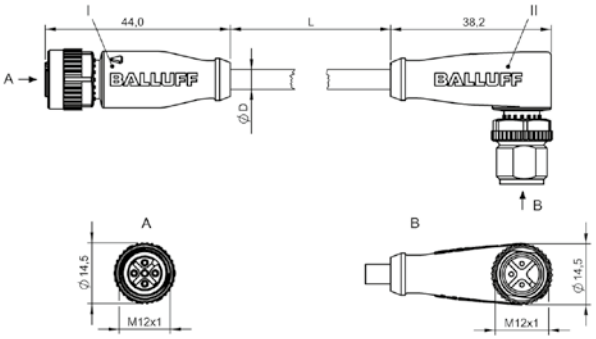

BCC M415-M423-3A-300-...

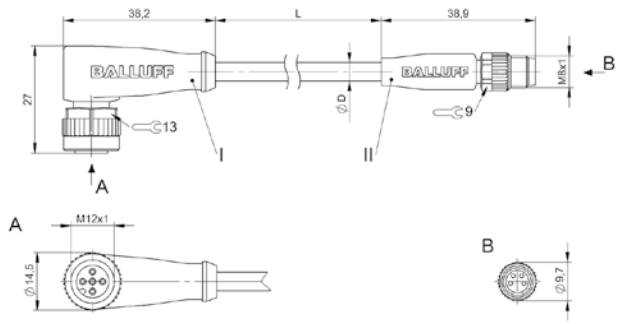

BCC M425-M313-3F-300-...
BCC M425-M313-3F-602-...

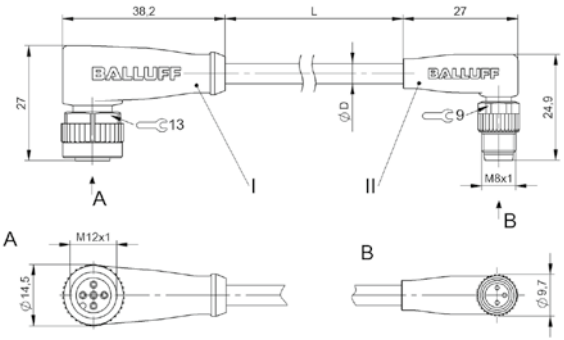

BCC M425-M323-3F-300-...
BCC M425-M323-3F-602-...

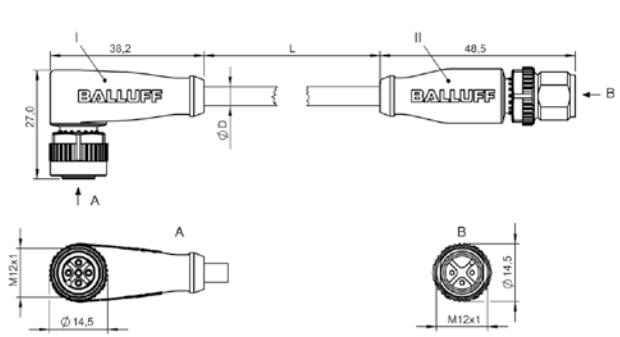

BCC M425-M413-3A-300-...
BCC M425-M413-3A-602-...

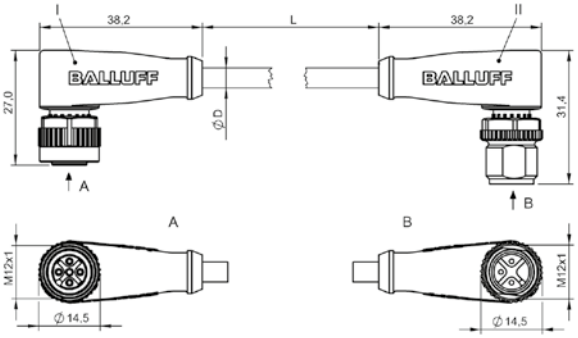

BCC M425-M423-3A-300-...

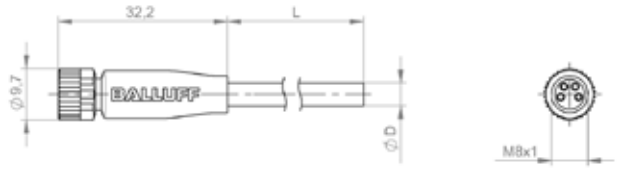

BCC M314-0000-10-003-...

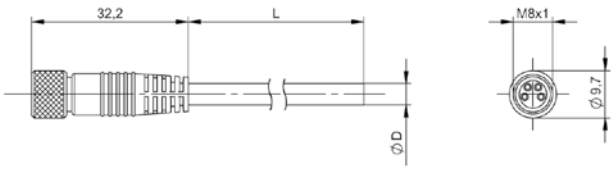

BCC M314-0000-10-014-...

Do you need more details? Our Product Finder at www.balluff.com provides you with product-specific information, including technical drawings, data sheets, user guides and more for each individual product. All items are available for download.

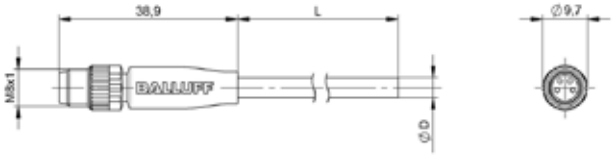

BCC M314-0000-20-003-...

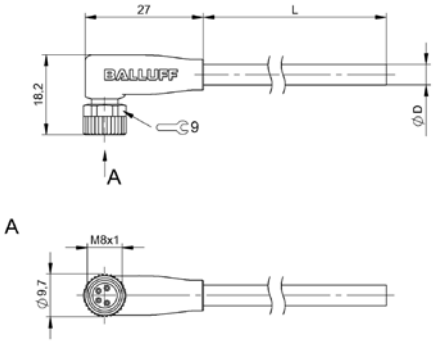

BCC M324-0000-10-003-...
BCC M324-0000-10-008-...

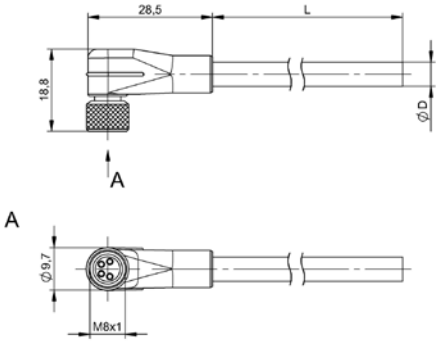

BCC M324-0000-10-014-...

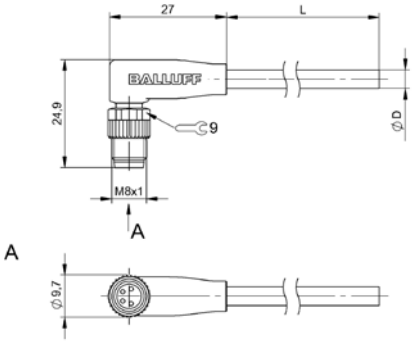

BCC M324-0000-20-003-...

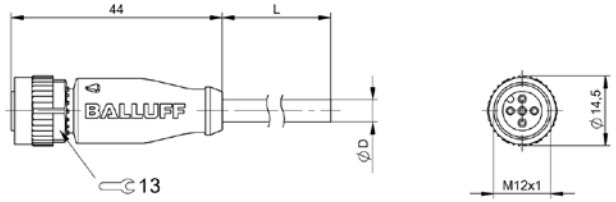

BCC M415-0000-1A-003-...
BCC M415-0000-1A-008-...
BCC M415-0000-1A-010-...

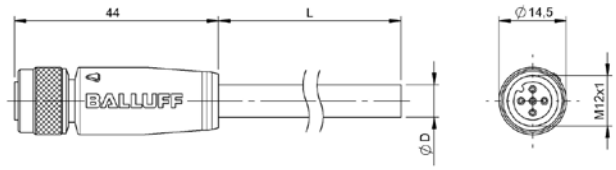

BCC M415-0000-1A-014-...

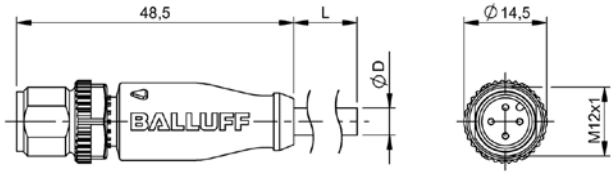

BCC M414-0000-2A-003-...

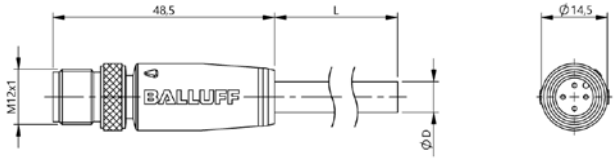

BCC M414-0000-2A-014-...

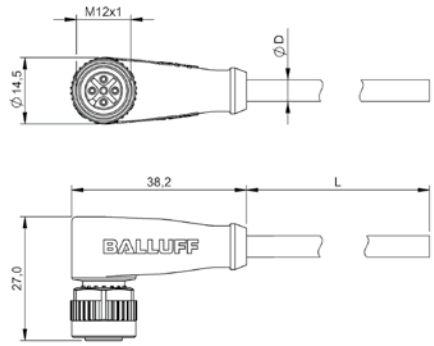

BCC M425-0000-1A-003-...
BCC M425-0000-1A-008-...
BCC M425-0000-1A-010-...

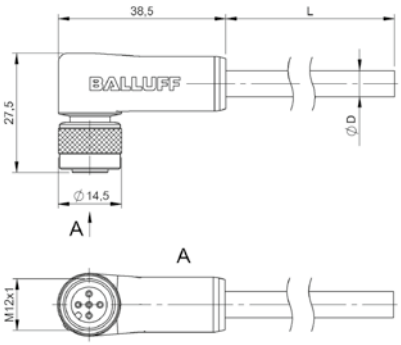

BCC M425-0000-1A-014-...

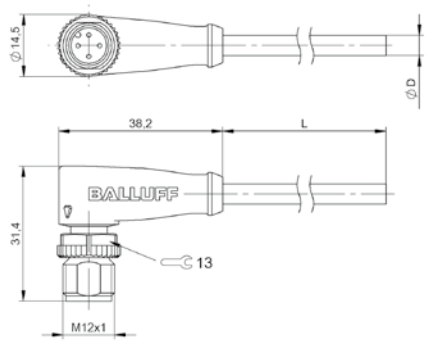

BCC M424-0000-2A-003-...
BCC M424-0000-2A-008-...

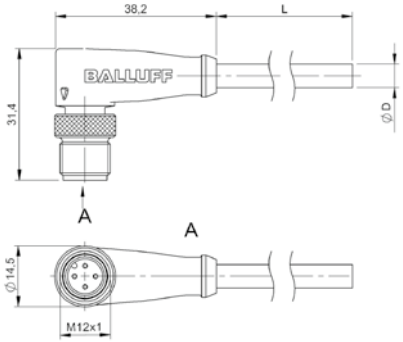

BCC M424-0000-2A-014-...

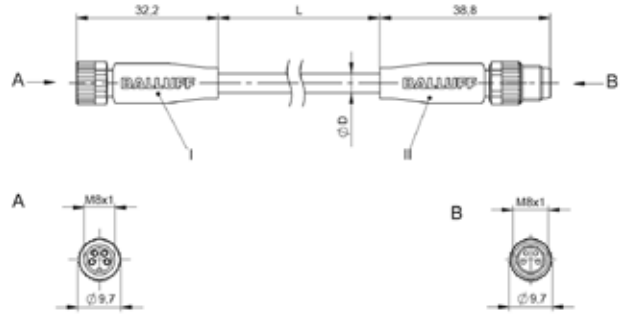

BCC M314-M314-30-304-...

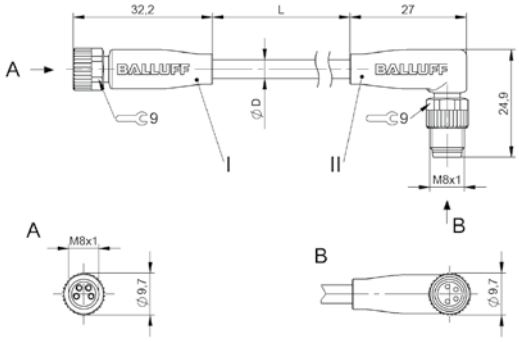

BCC M314-M324-30-304-...

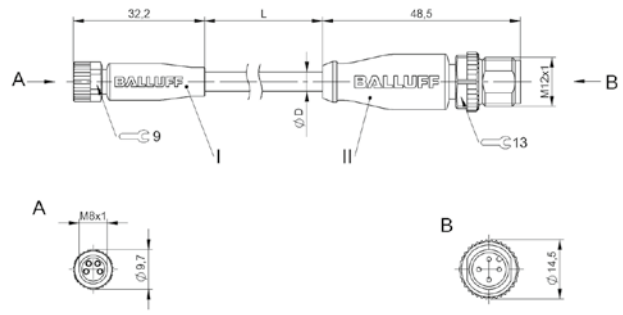

BCC M314-M414-3E-304-...

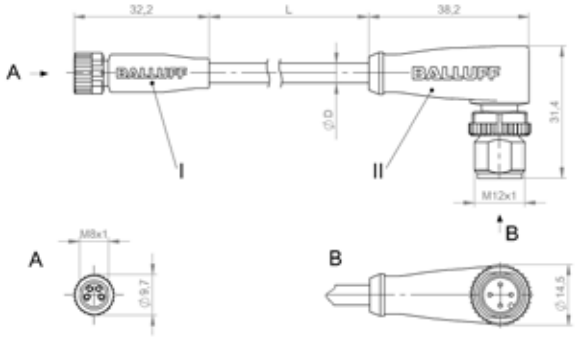

BCC M314-M424-3E-304-...

Do you need more details? Our Product Finder at www.balluff.com provides you with product-specific information, including technical drawings, data sheets, user guides and more for each individual product. All items are available for download.

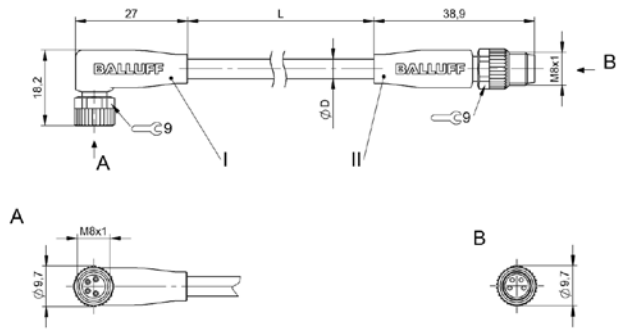

BCC M324-M314-30-304-...

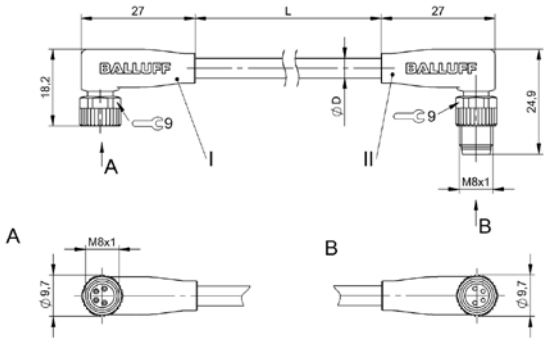

BCC M324-M324-30-304-...

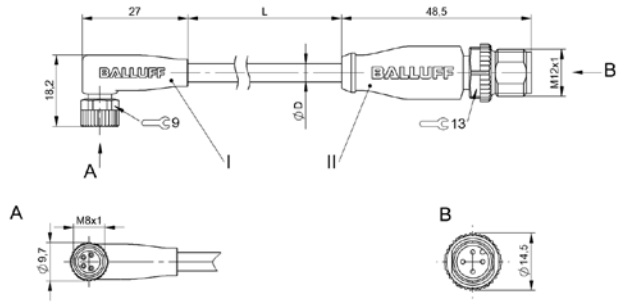

BCC M324-M414-3E-304-...

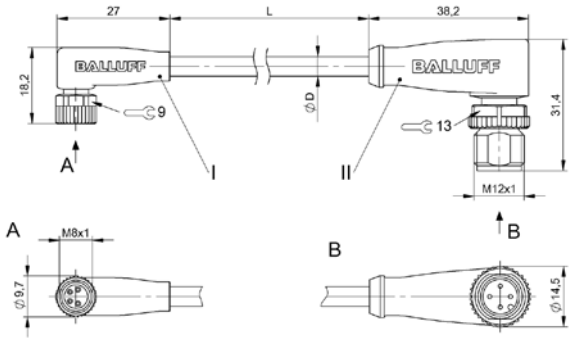

BCC M324-M424-3E-304-...

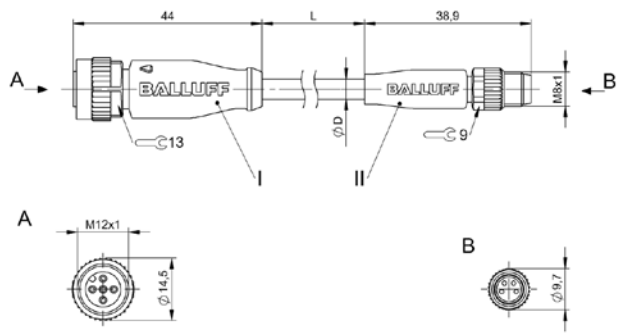

BCC M415-M314-3F-304-...

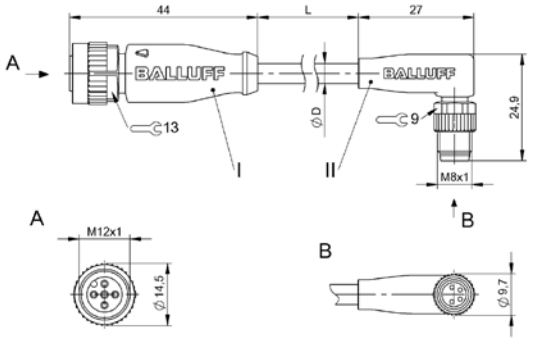

BCC M415-M324-3F-304-...

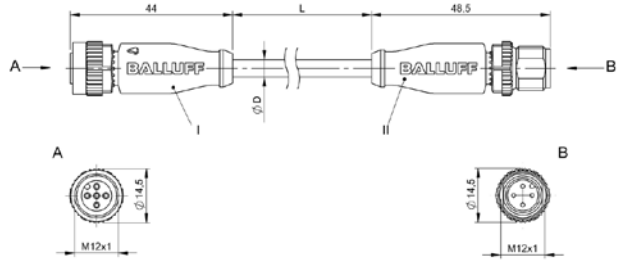

BCC M415-M414-3A-304-...
BCC M415-M414-3A-606-...

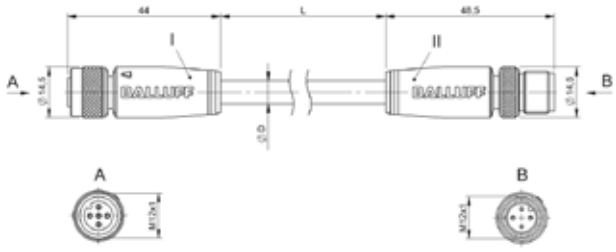

BCC M415-M414-3A-305-PS0434-...

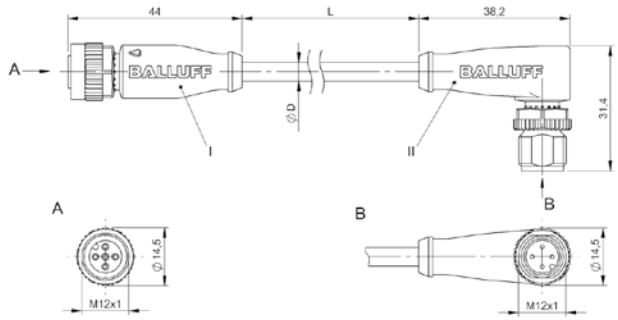

BCC M415-M424-3A-304-...

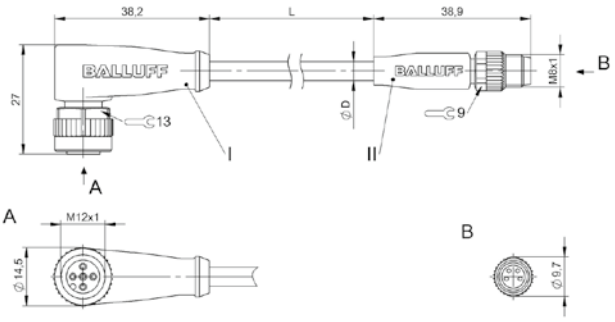

BCC M425-M314-3F-304-...

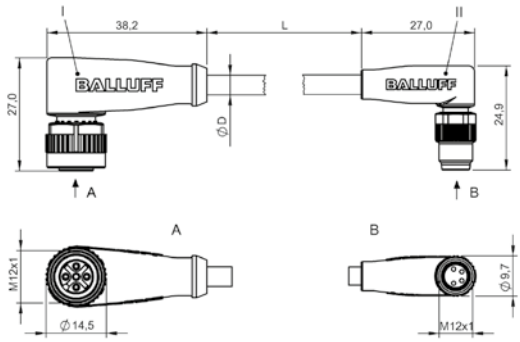

BCC M425-M324-3F-304-...

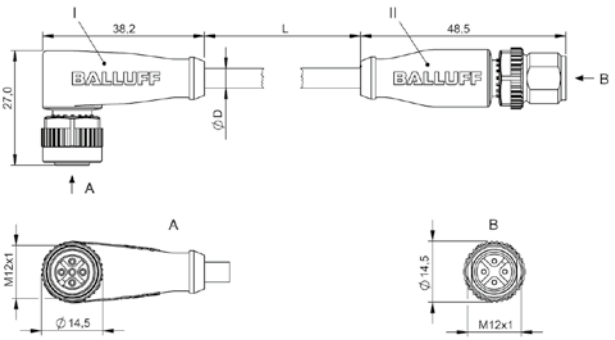

BCC M425-M414-3A-304-...
BCC M425-M414-3A-606-...

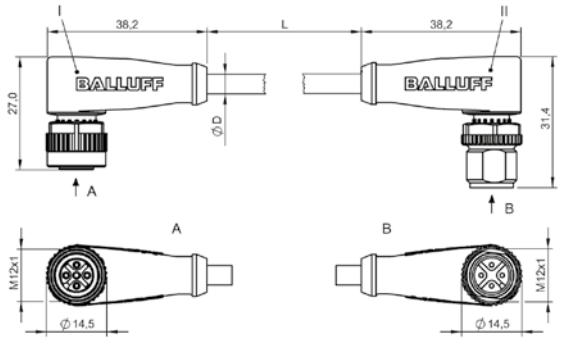

BCC M425-M424-3A-304-...

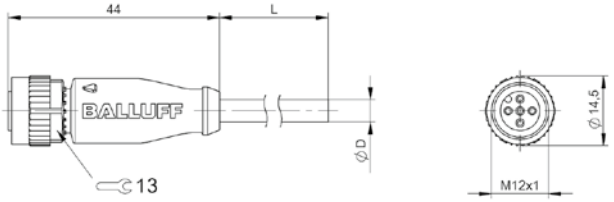

BCC M415-0000-1A-017-PX0534-...
BCC M415-0000-1A-034-PX0534-...

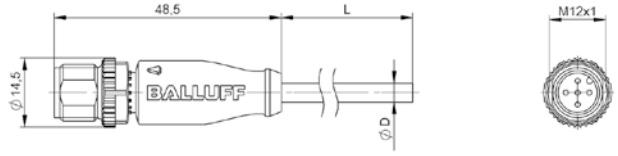

BCC M415-0000-2A-017-PX0534-...
BCC M415-0000-2A-034-PX0534-...

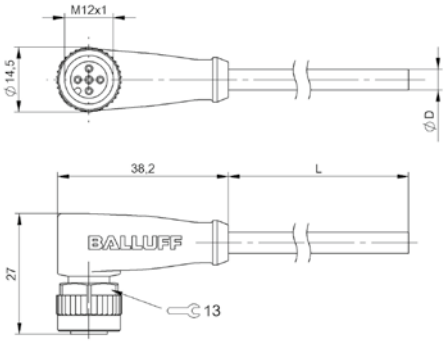

BCC M425-0000-1A-017-PX0534-...
BCC M425-0000-1A-034-PX0534-...
BCC M425-0000-1A-039-PX0534-...
BCC M425-0000-1A-040-PX0534-...

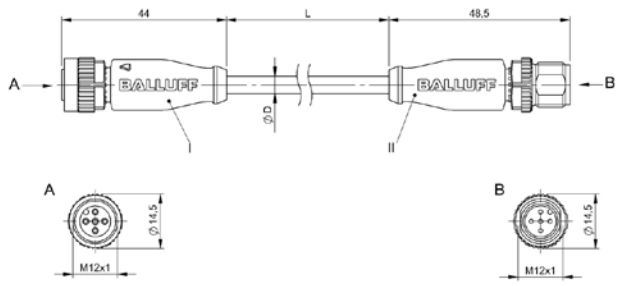

BCC M415-M415-3A-312-PX0534-...
BCC M415-M415-3A-313-PX0534-...

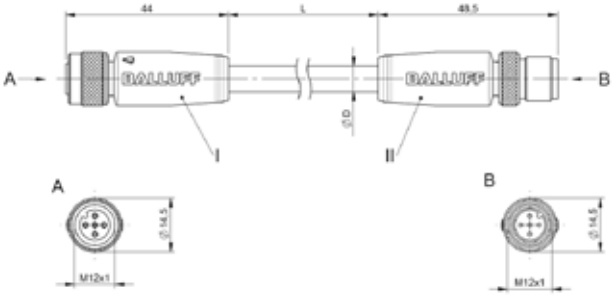

BCC M415-M415-3A-315-PS0534-...

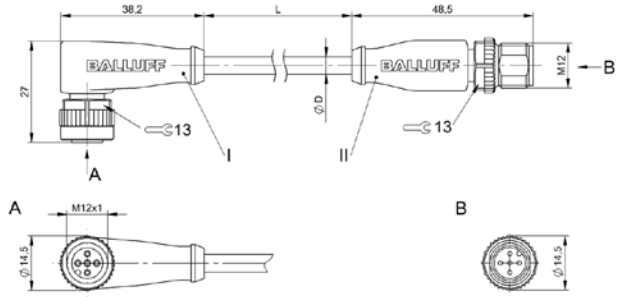

BCC M425-M415-3A-312-PX0534-...
BCC M425-M415-3A-313-PX0534-...
BCC M425-M415-3A-660-PX0534-...
BCC M425-M415-3A-661-PX0534-...

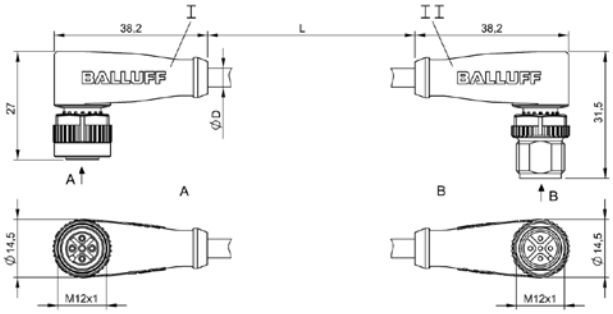

BCC M425-M425-3A-660-PX0534-...
BCC M425-M425-3A-661-PX0534-...

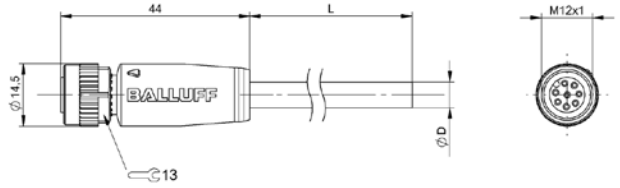

BCC M418-0000-1A-044-PX0825-...
BCC M418-0000-1A-069-PX0825-...

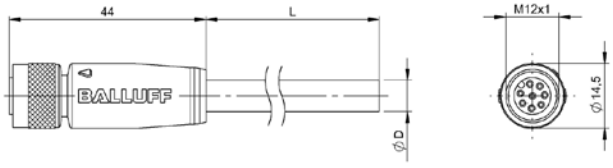

BCC M418-0000-1A-046-PS0825-...

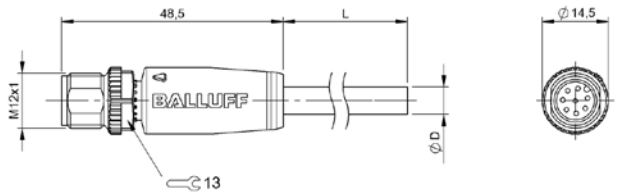

BCC M418-0000-2A-044-PX0825-...

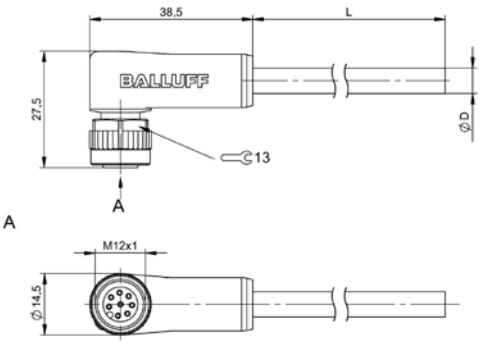

BCC M428-0000-1A-044-PX0825-...
BCC M428-0000-1A-069-PX0825-...

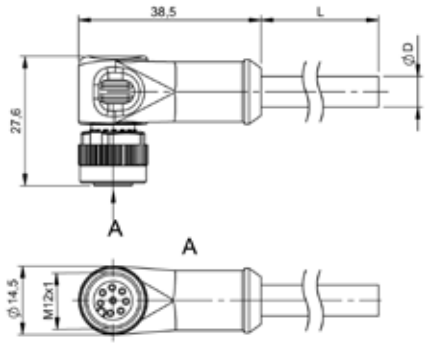

BCC M428-0000-1A-046-PS0825-...

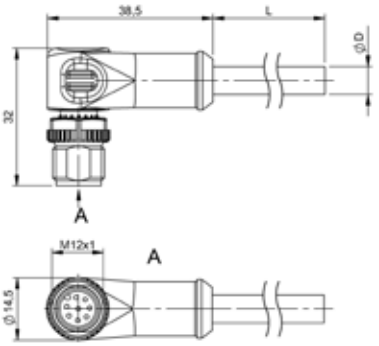

BCC M428-0000-2A-044-PX0825-...

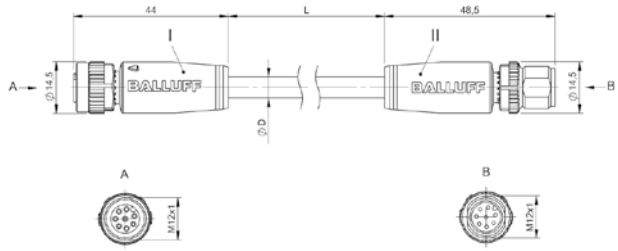

BCC M418-M418-3A-342-PX0825-...

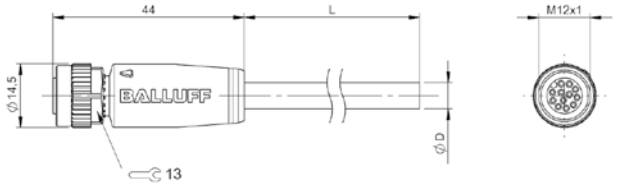

BCC M41C-0000-1A-049-PX0C25-...

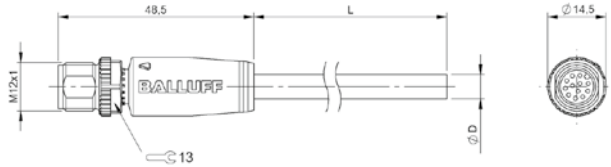

BCC M41C-0000-2A-049-PX0C25-...

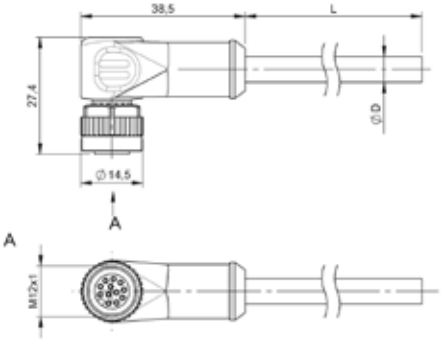

BCC M42C-0000-1A-049-PX0C25-...

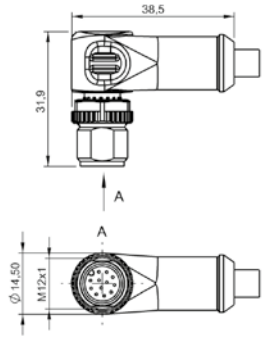

BCC M42C-0000-2A-049-PX0C25-...

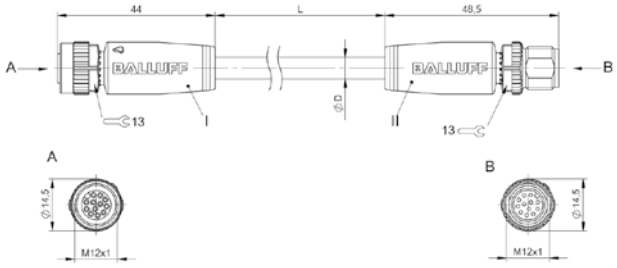

BCC M41C-M41C-3A-325-PX0C25-...

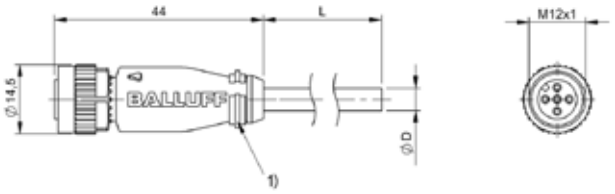

1) White identification clip

BCC M415-0000-1A-001-PH0334-...
BCC M415-0000-1A-003-PH0434-...

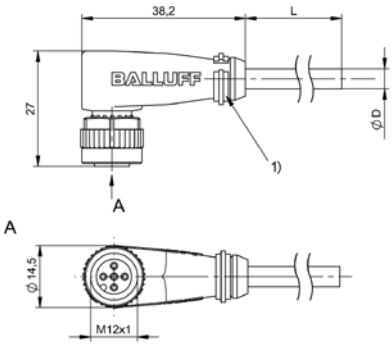

1) White identification clip

BCC M425-0000-1A-001-PH0334-...
BCC M425-0000-1A-003-PH0434-...

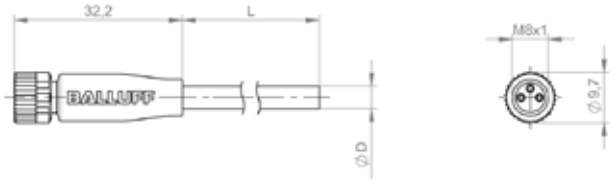

BCC M313-0000-10-001-PW3334-...

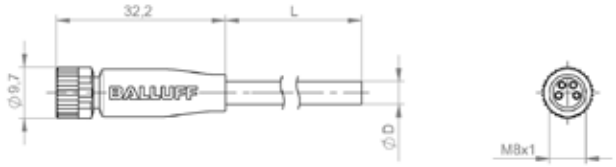

BCC M314-0000-10-003-PW3434-...

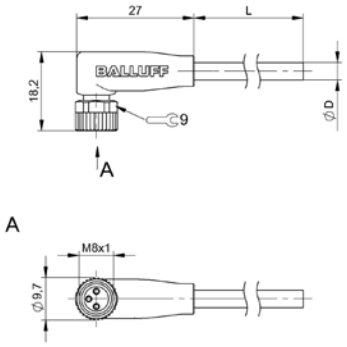

BCC M323-0000-10-001-PW3334-...

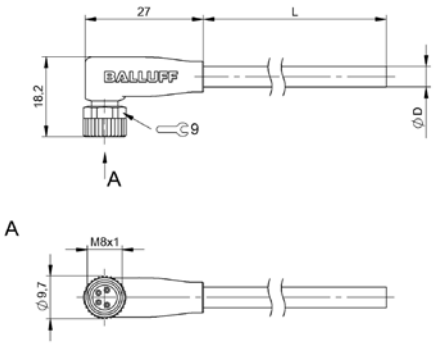

BCC M324-0000-10-003-PW3434-...

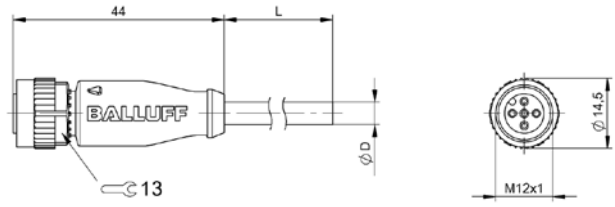

BCC M415-0000-1A-003-PW3434-...

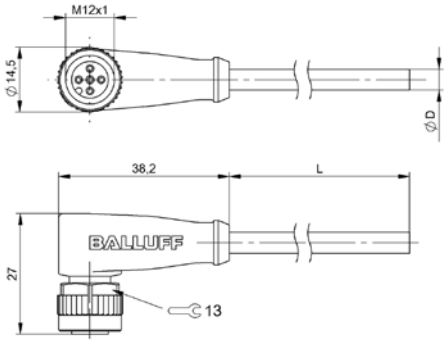

BCC M425-0000-1A-001-PW3334-...
BCC M425-0000-1A-004-PW3334-...
BCC M425-0000-1A-003-PW3434-...
BCC M425-0000-1A-099-PW3434-...
BCC M425-0000-1A-100-PW3534-...

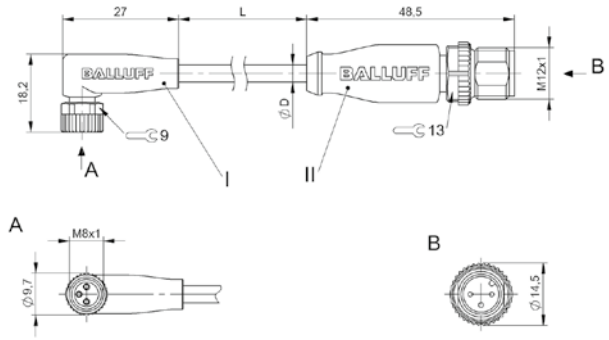

BCC M323-M413-3E-602-PW3334-...

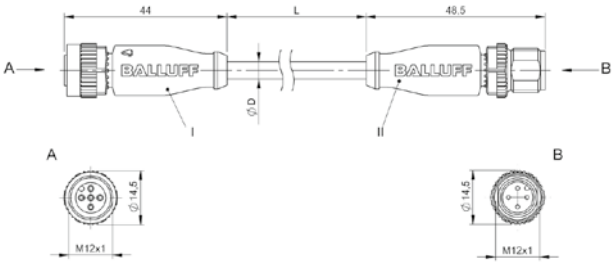

BCC M415-M414-3A-304-PW3434-...
BCC M415-M415-3A-313-PW3534-...

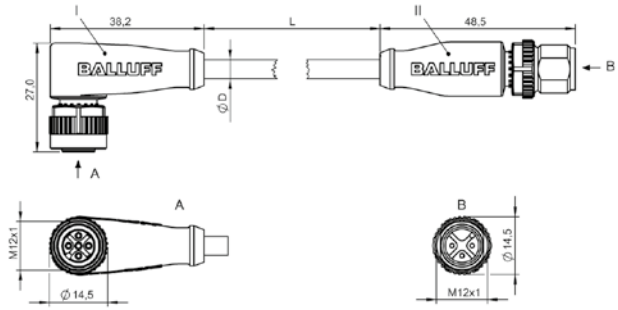

BCC M425-M413-3A-602-PW3334-...
BCC M425-M414-3A-304-PW3434-...
BCC M425-M414-3A-691-PW3434-...
BCC M425-M415-3A-313-PW3534-...
BCC M425-M415-3A-692-PW3534-...

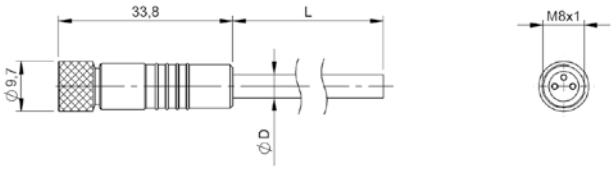

BCC W313-0000-10-001-BW8334-...
BCC W314-0000-10-003-BW8434-...

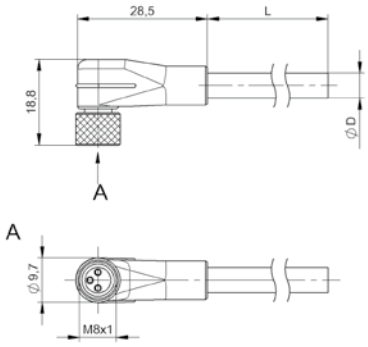

BCC W323-0000-10-001-BW8334-...
BCC W324-0000-10-003-BW8434-...

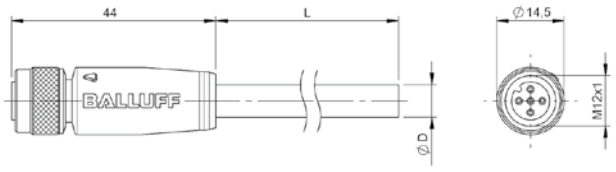

BCC W415-0000-1A-003-BW8434-...

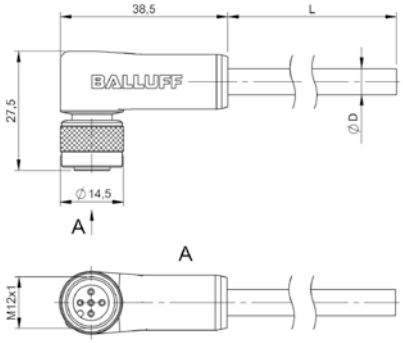

BCC W425-0000-1A-003-BW8434-...

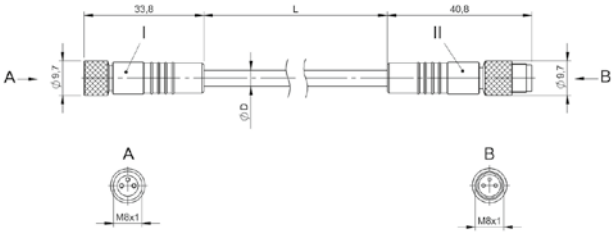

BCC W313-W313-30-300-BW8334-...

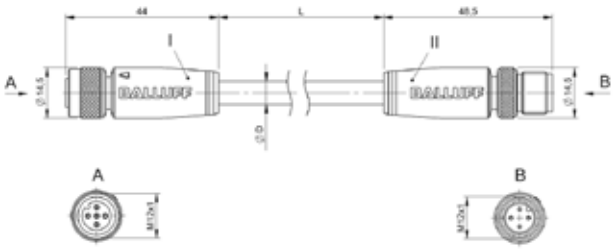

BCC W415-W414-3A-304-BW8434-...

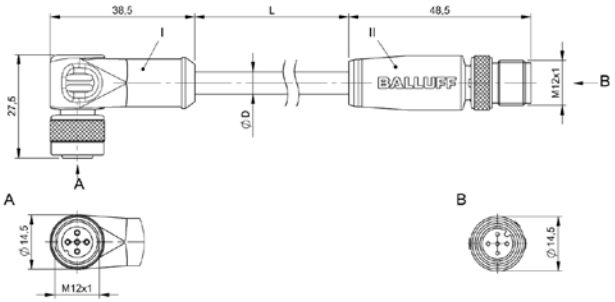

BCC W425-W414-3A-304-BW8434-...

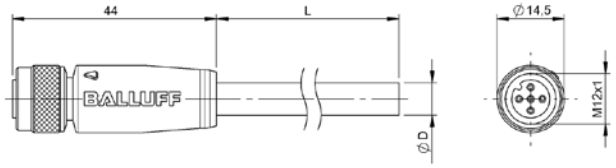

BCC W415-0000-1A-003-SW0434-...

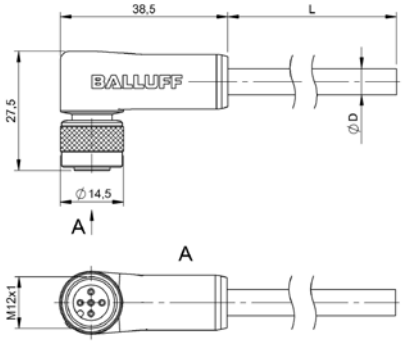

BCC W425-0000-1A-003-SW0434-...

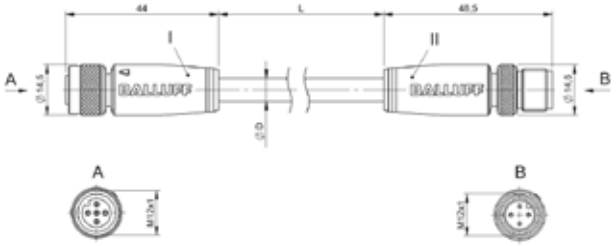

BCC W415-W414-3A-304-SW0434-...
BCC W415-W414-3A-650-SW0434-...

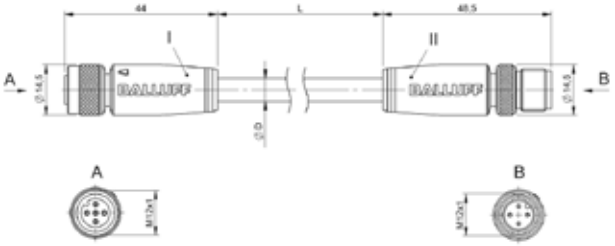

BCC W425-W414-3A-304-SW0434-...
BCC W425-W414-3A-650-SW0434-...

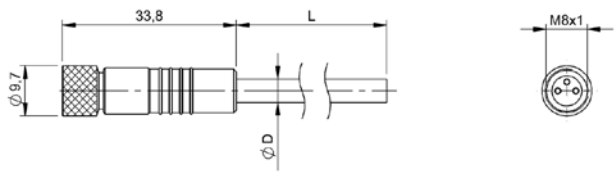

BCC W313-0000-10-001-TW0334-...

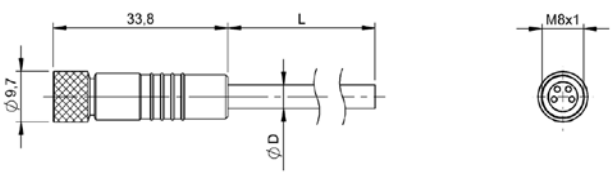

BCC W314-0000-10-003-TW0434-...

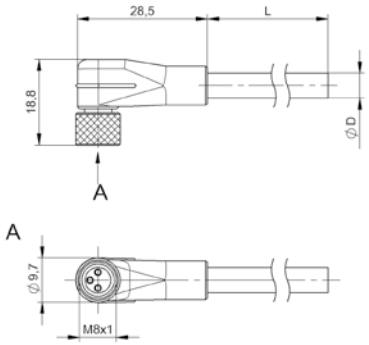

BCC W323-0000-10-001-TW0334-...

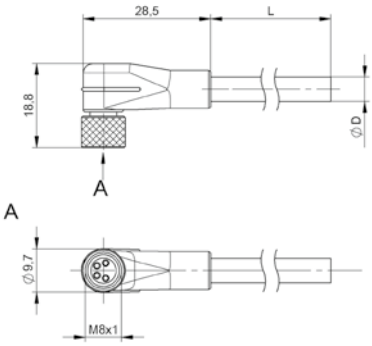

BCC W324-0000-10-003-TW0434-...

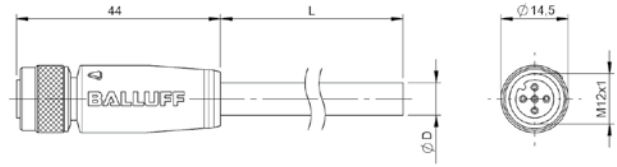

BCC W415-0000-1A-003-TW0434-...

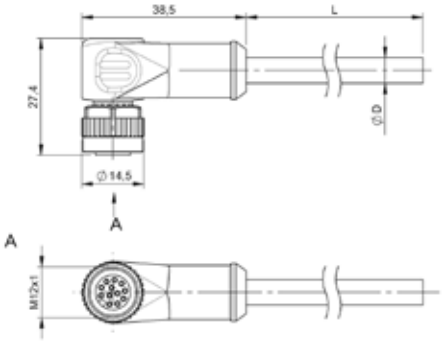

BCC W425-0000-1A-003-TW0434-...

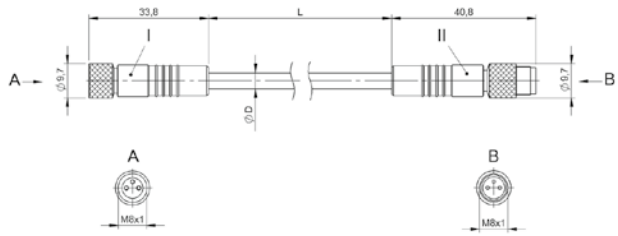

BCC W313-W313-30-300-TW0334-...

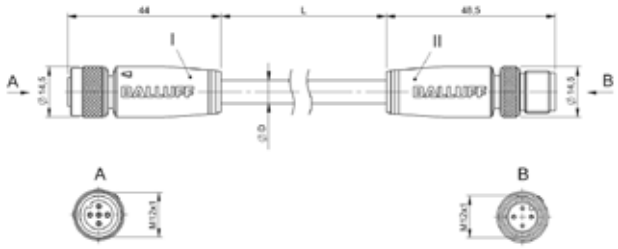

BCC W415-W414-3A-304-TW0434-...
BCC W415-W414-3A-650-TW0434-...

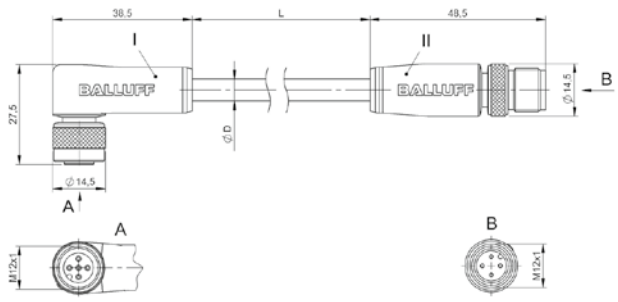

BCC W425-W414-3A-304-TW0434-...
BCC W425-W414-3A-650-TW0434-...

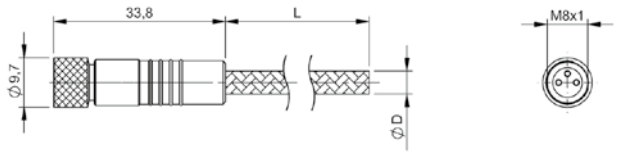

BCC W313-0000-10-001-MW8334-...

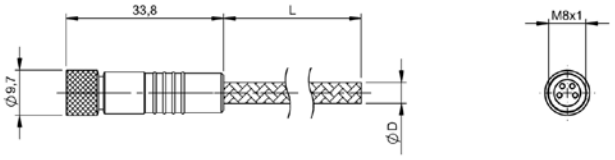

BCC W314-0000-10-003-MW8434-...

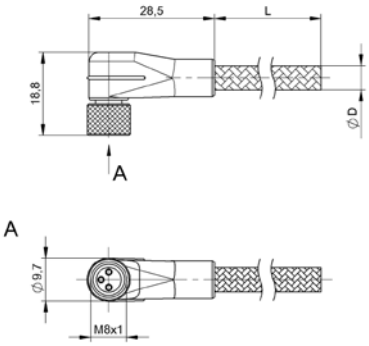

BCC W323-0000-10-001-MW8334-...

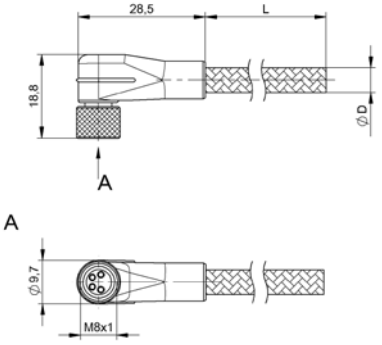

BCC W324-0000-10-003-MW8434-...

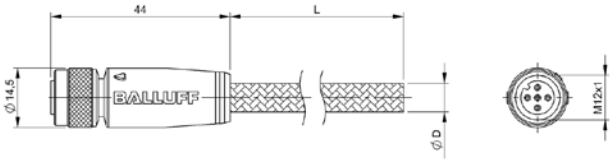

BCC W415-0000-1A-003-MW8434-...

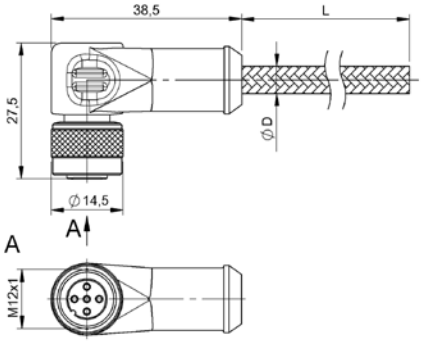

BCC W425-0000-1A-003-MW8434-...

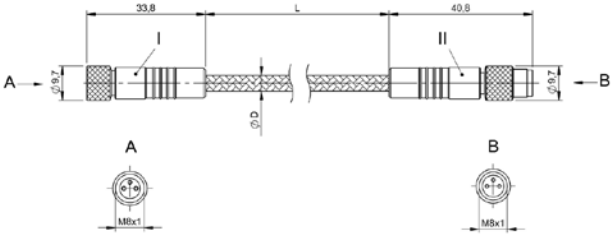

BCC W313-W313-30-300-MW8334-...

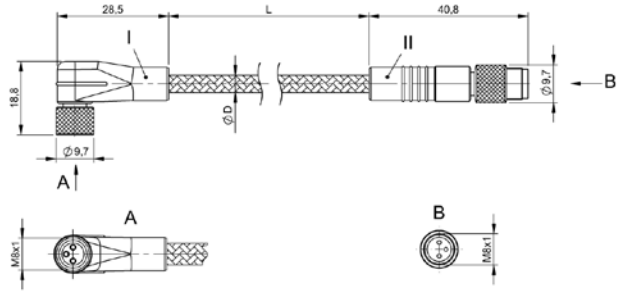

BCC W323-W313-30-300-MW8334-...

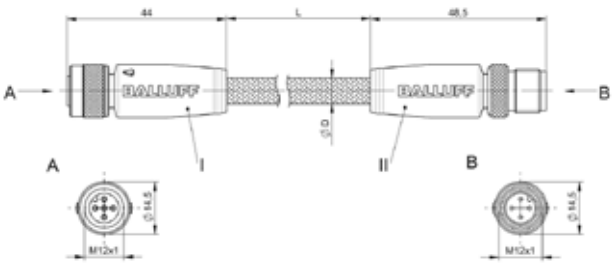

BCC W415-W414-3A-304-MW8434-...

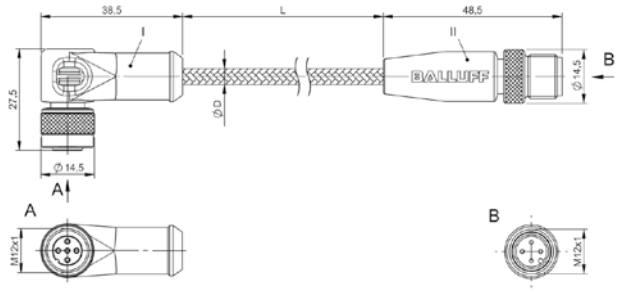

BCC W425-W414-3A-304-MW8434-...

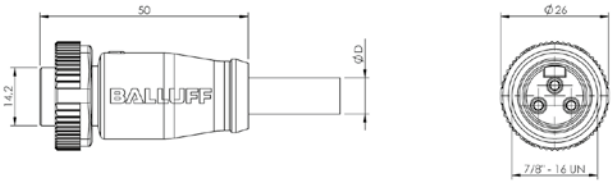

BCC A313-0000-10-097-PX03A5-...
BCC A313-0000-10-071-VX43W6-...

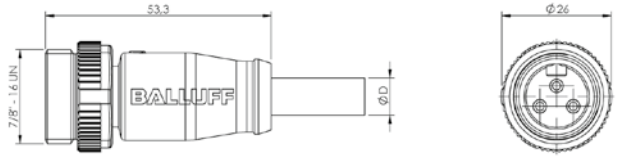

BCC A313-0000-20-071-VX43W6-...

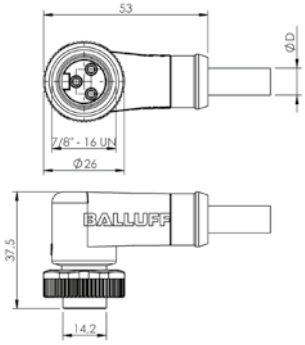

BCC A323-0000-10-097-PX03A5-...
BCC A323-0000-10-071-VX43W6-...

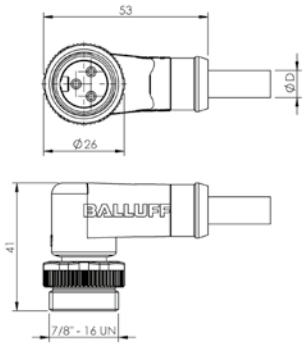

BCC A323-0000-20-071-VX43W6-...

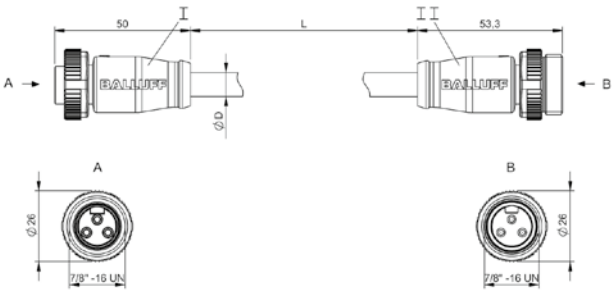

BCC A313-A313-30-365-PX03A5-...

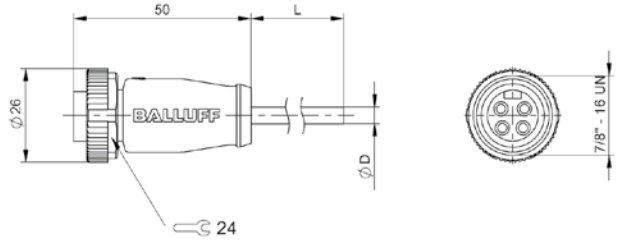

BCC A314-0000-10-003-...

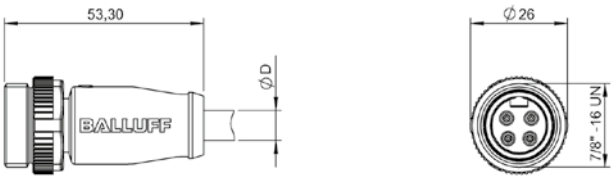

BCC A314-0000-20-003-...

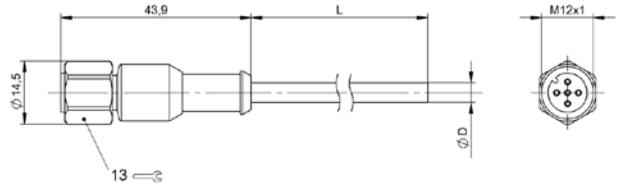

BCC S4B5-0000-1A-003-YX8434-...
BCC S4B5-0000-1A-017-YX8534-...
BCC S4B5-0000-1A-034-YX8534-...

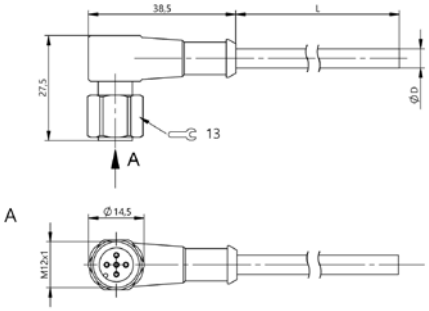

BCC S4C5-0000-1A-003-YX8434-...
BCC S4B5-0000-1A-017-YX8534-...

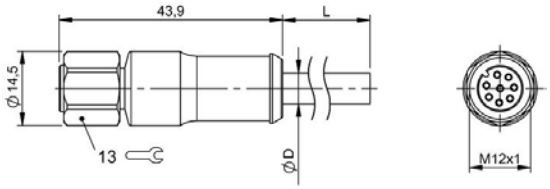

BCC S4B8-0000-1A-045-YX8825...

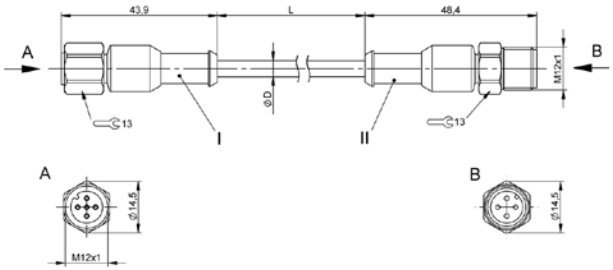

BCC S4B5-S4B4-3A-304-YX8434-...

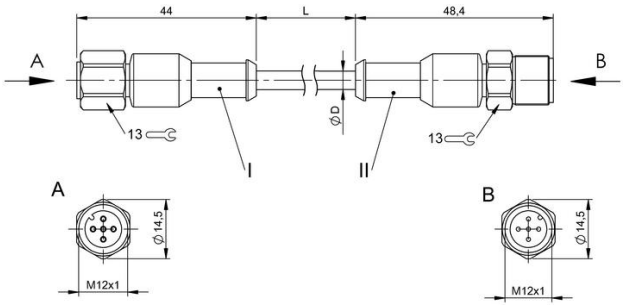

BCC S4B5-S4B5-3A-313-YX8534-...

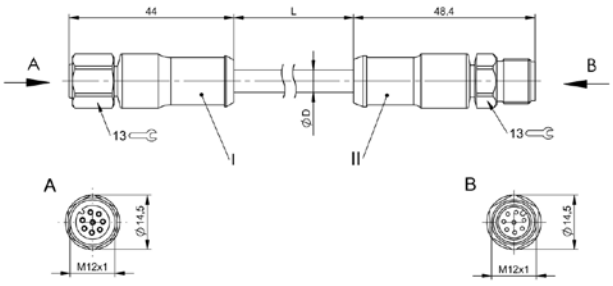

BCC S4B8-S4B8-3A-321-YX8825-...

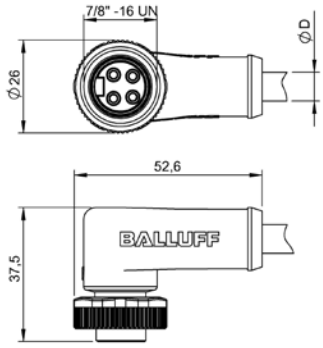

BCC A324-0000-10-003-...

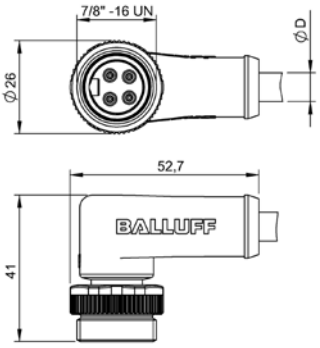

BCC A324-0000-20-003-...

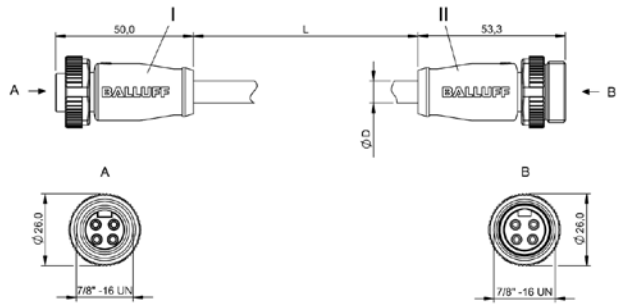

BCC A314-A314-30-304-...

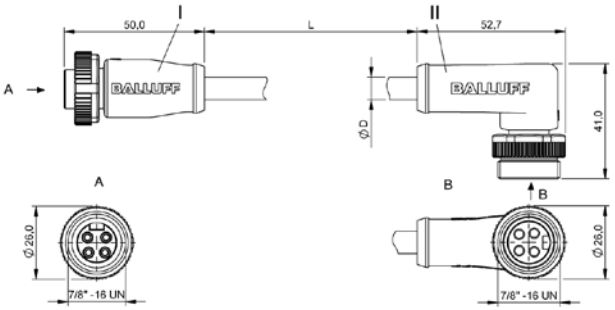

BCC A314-A324-30-304-...

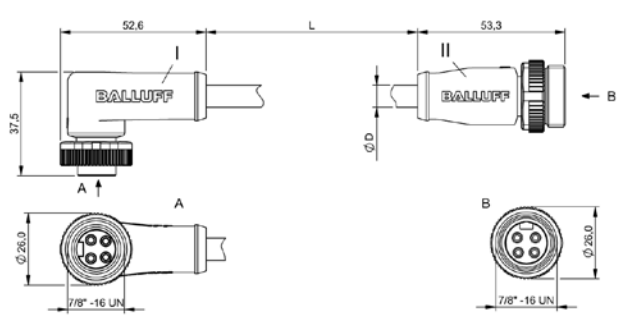

BCC A324-A314-30-304-...

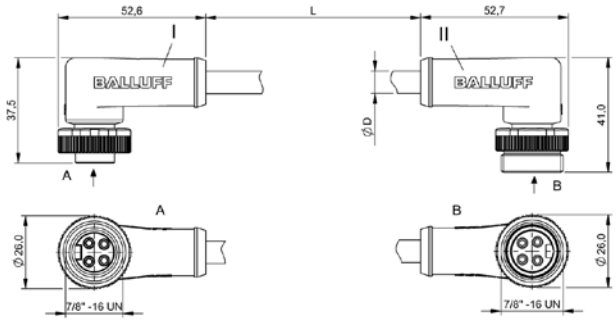

BCC A324-A324-30-304-...

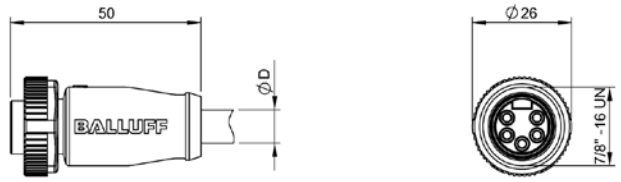

BCC A315-0000-10-063-...

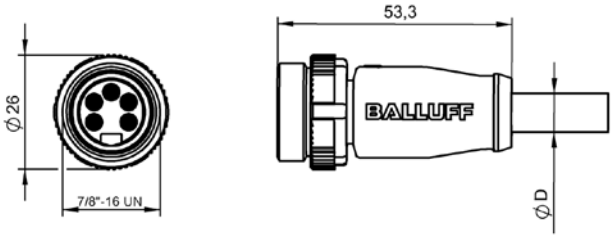

BCC A315-0000-20-063-...

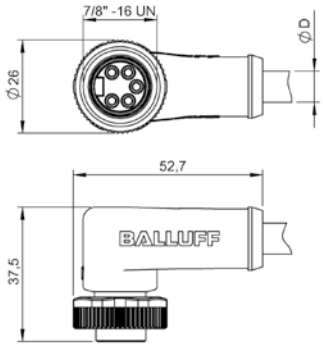

BCC A325-0000-10-063-...

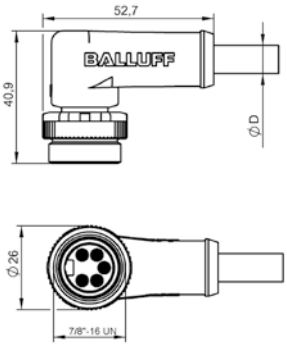

BCC A325-0000-20-063-...

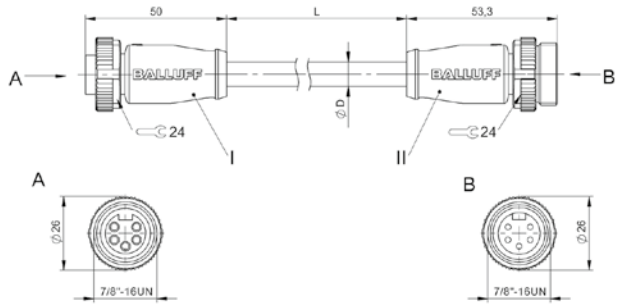

BCC A315-A315-30-335-...

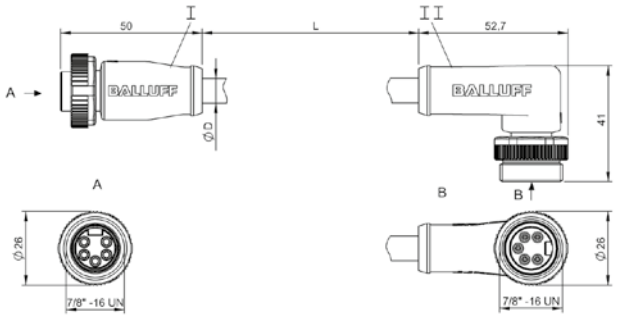

BCC A315-A325-30-335-...

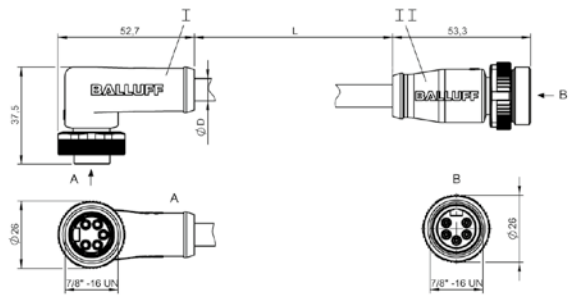

BCC A325-A315-30-335-...

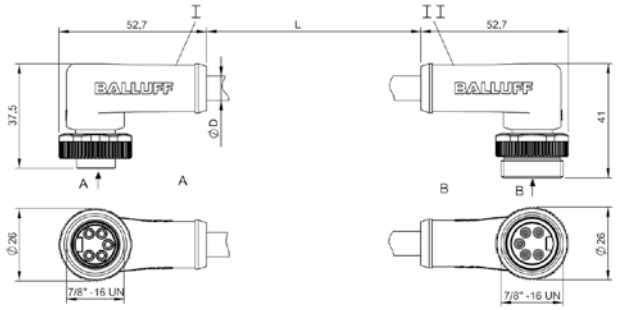

BCC A325-A325-30-335-...

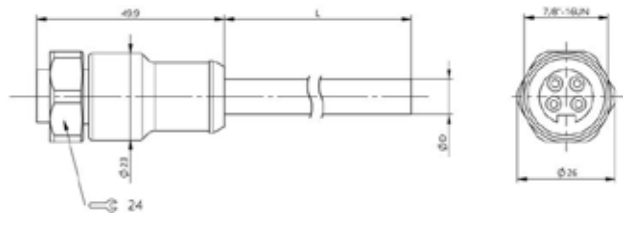

BCC C3B4-0000-10-003-YX84A5...

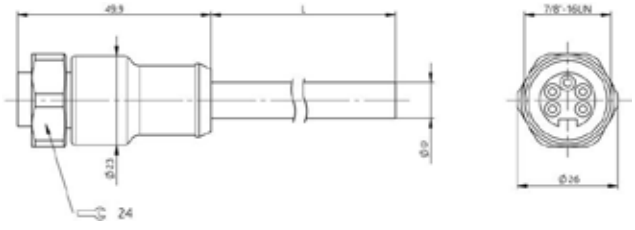

BCC C3B5-0000-10-063-YX85A5-...

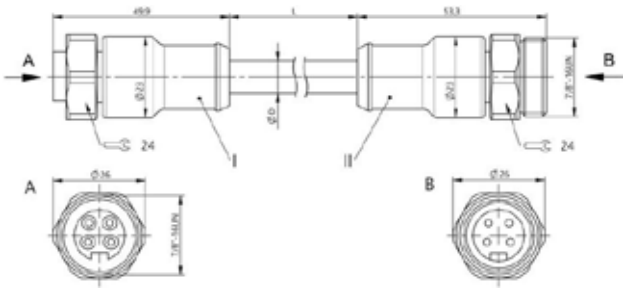

BCC C3B4-C3B4-30-304-YX84A5-...

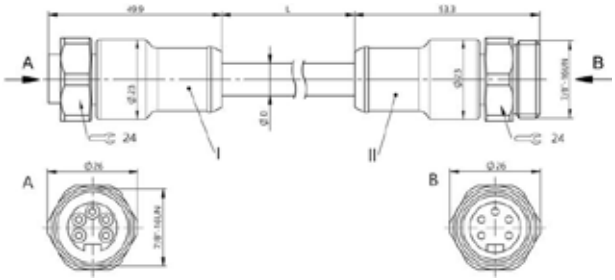

BCC C3B5-C3B5-30-335-YX85A5...

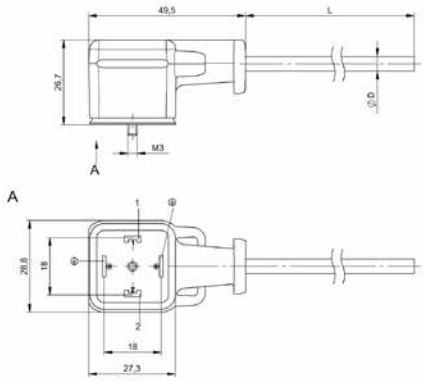

BCC VA04-0000-10-054-...
BCC VA04-0000-10-053-...

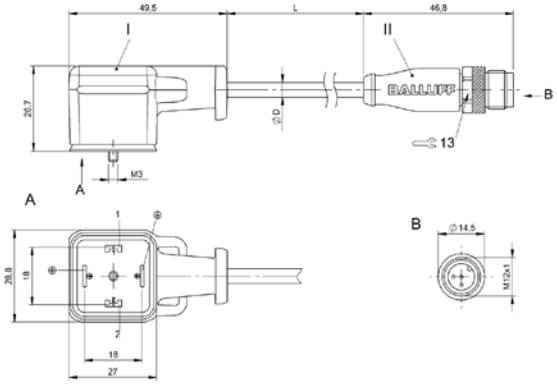

BCC VA04-M413-3E-664-...

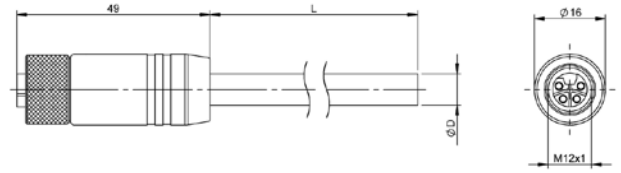

BCC M414-0000-1L-003-PX04A5...

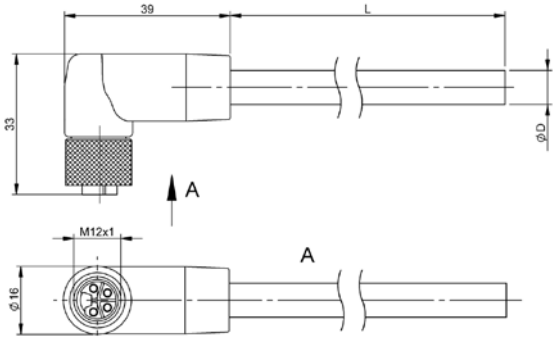

BCC M424-0000-1L-003-PX04A5-...

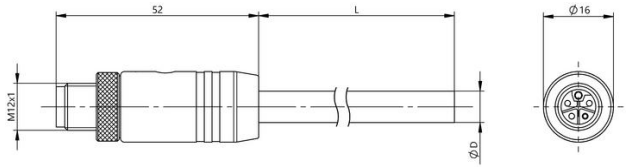

BCC M415-0000-2L-003-PX04A5...
BCC M415-0000-2L-150-PX85A5...

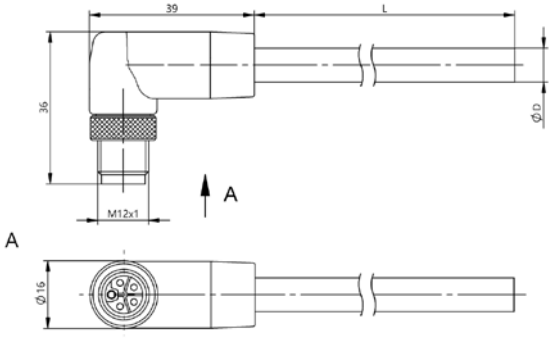

BCC M425-0000-2L-003-PX04A5...
BCC M425-0000-2L-150-PX85A5...

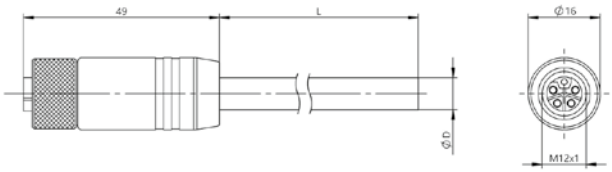

BCC M415-0000-1L-150-PX85A5...

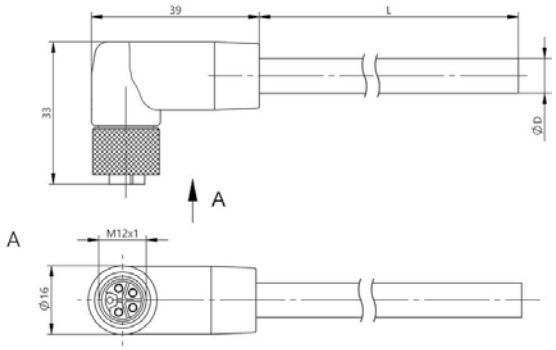

BCC M425-0000-1L-150-PX85A5...

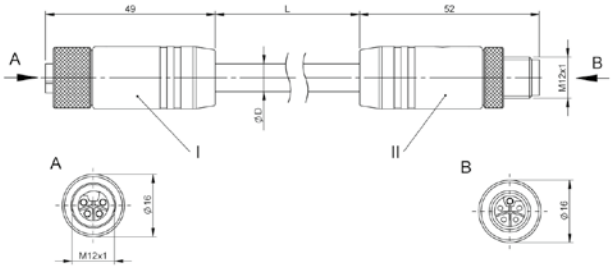

BCC M414-M415-3L-304-PX04A5...

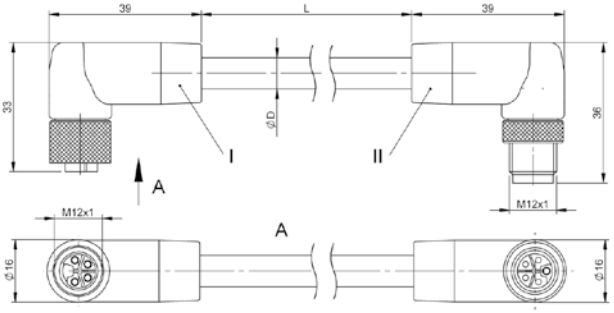

BCC M424-M425-3L-304-PX04A5...

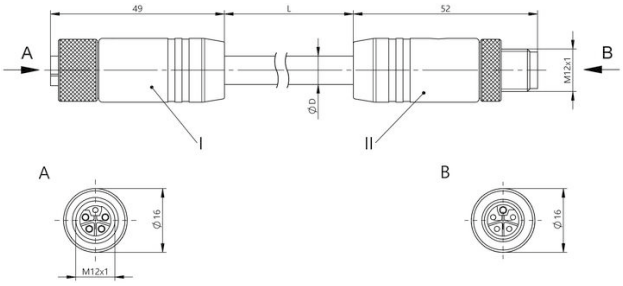

BCC M415-M415-3L-386-PX85A5...

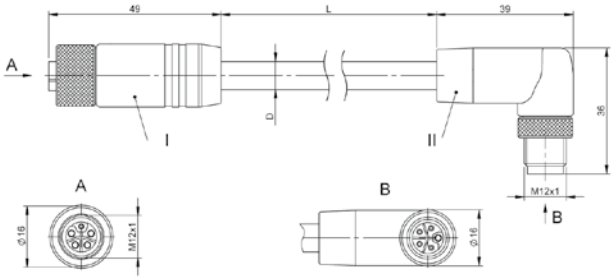

BCC M415-M425-3L-386-PX85A5...

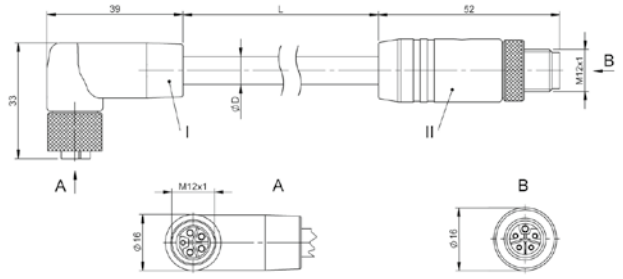

BCC M425-M415-3L-386-PX85A5...

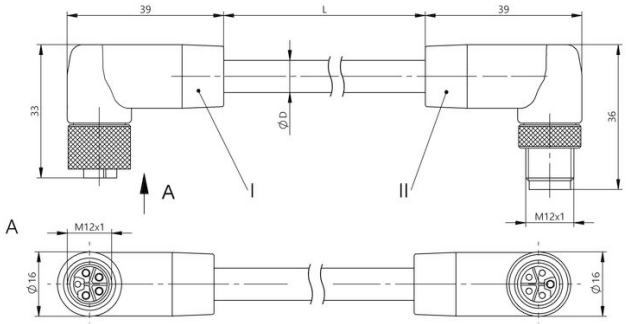

BCC M425-M425-3L-386-PX85A5...

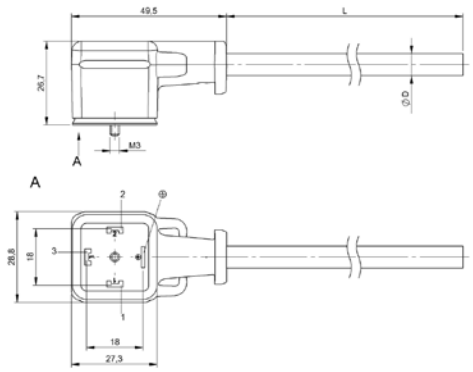

BCC PA04-0000-10-070-PX0550-...

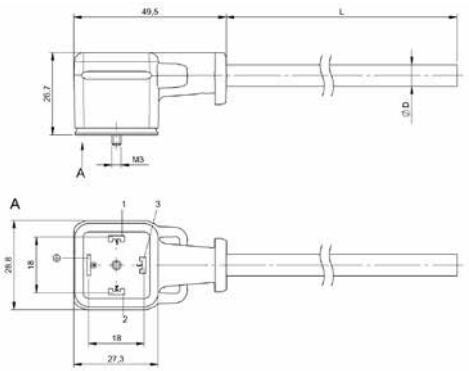

BCC PA24-0000-10-070-PX0550-...

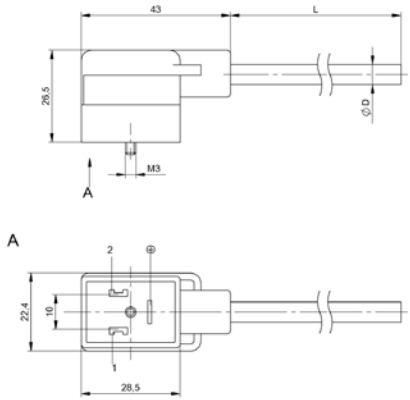

BCC VB03-0000-10-055-...

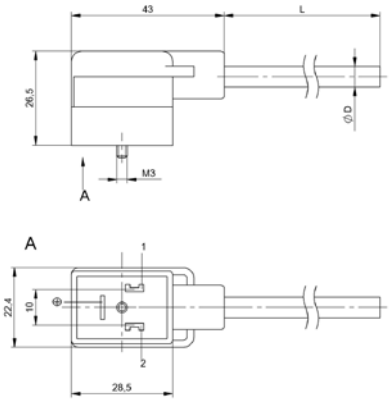

BCC VB23-0000-10-055-...

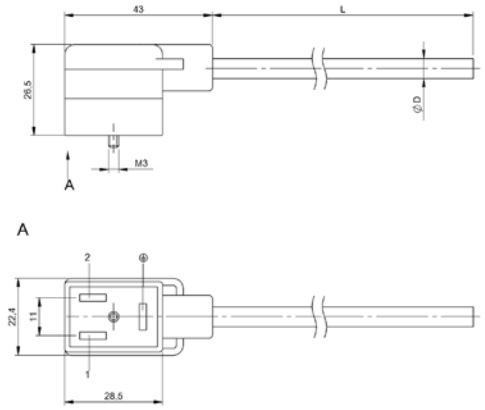

BCC VB43-0000-10-055-...

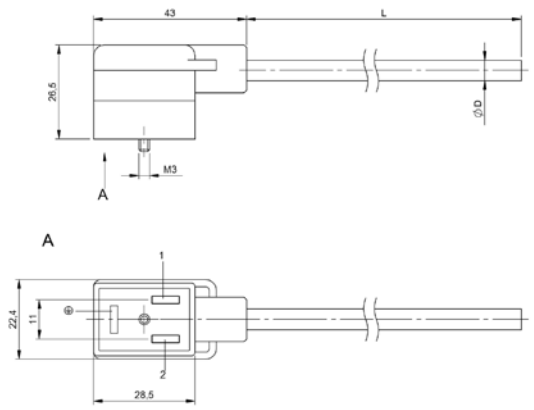

BCC VB63-0000-10-055-...

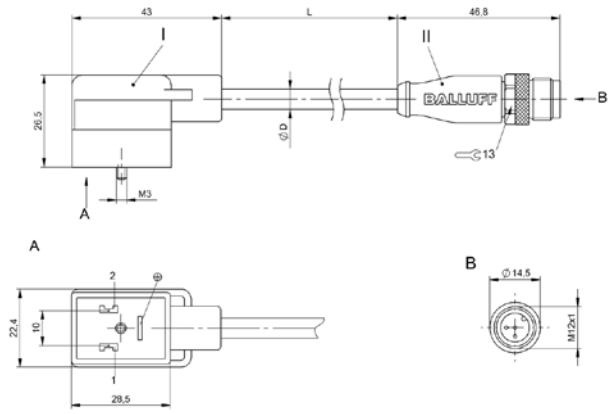

BCC VB03-M413-3E-666-PX0350-...

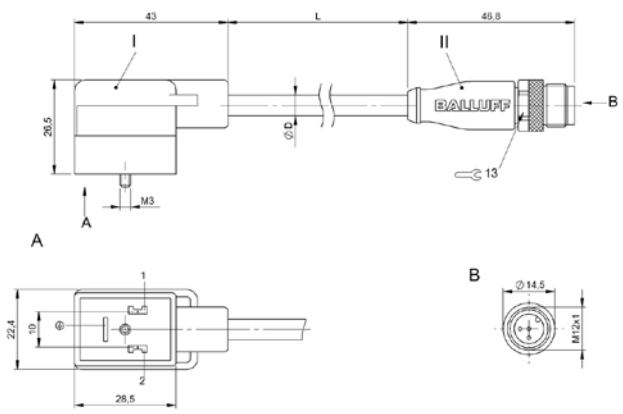

BCC VB23-M413-3E-666-PX0350-...

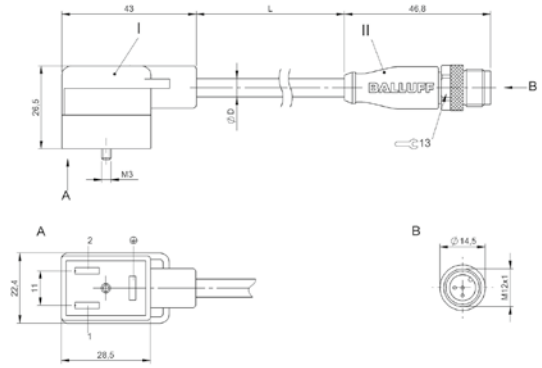

BCC VB43-M413-3E-666-PX0350-...

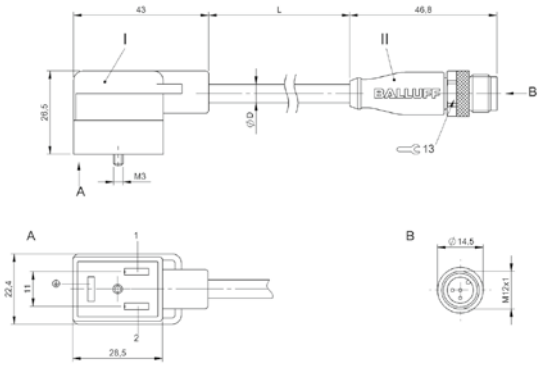

BCC VB63-M413-3E-666-PX0350-...

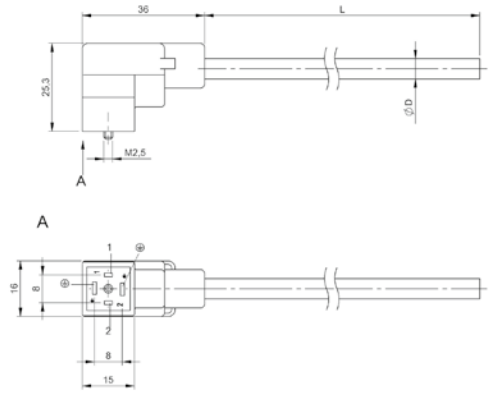

BCC VC04-0000-10-053-...

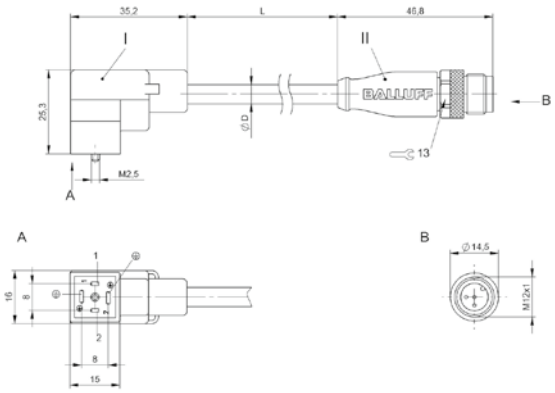

BCC VC04-M413-3E-664-PX0350-...

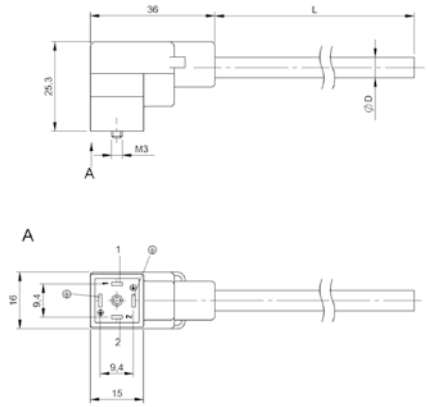

BCC VC44-0000-10-053-...

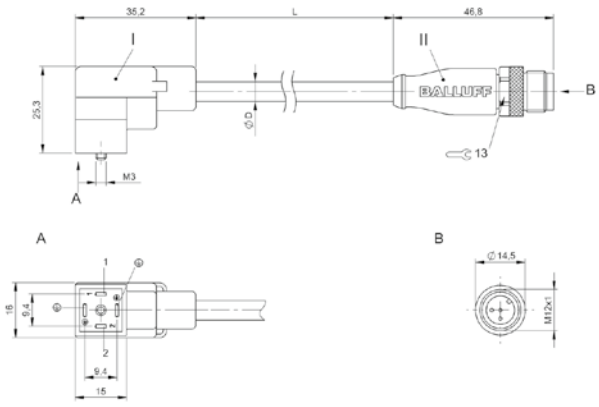

BCC VC44-M413-3E-664-PX0350-...

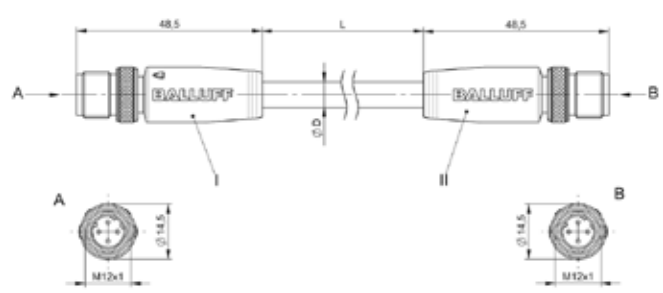

BCC M414-M414-6D-331-PS54N2-...

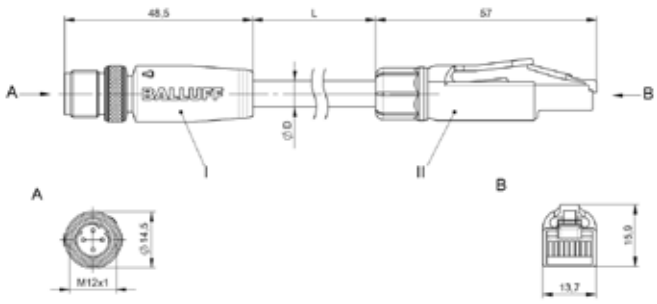

BCC M414-E834-8G-668-PS54N2-...

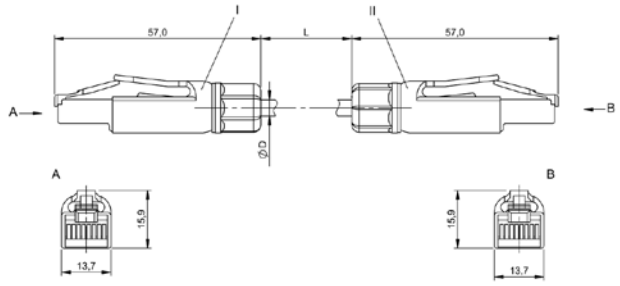

BCC E834-E834-90-334-PS54N2-...

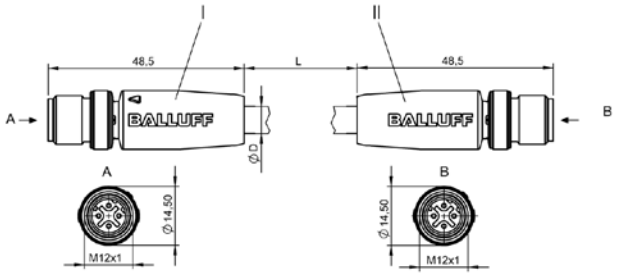

BCC M414-M414-6D-338-ES64N9-...

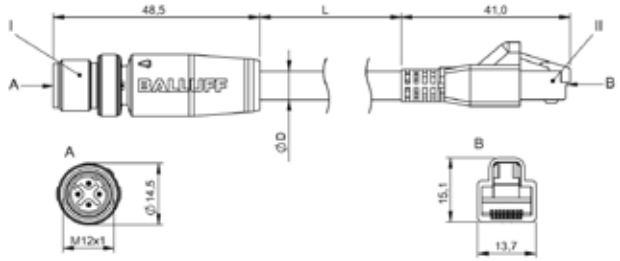

BCC M414-E894-8G-672-ES64N9-...

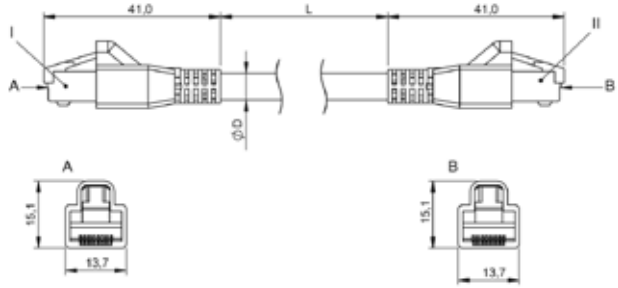

BCC E894-E894-90-339-ES64N9-...

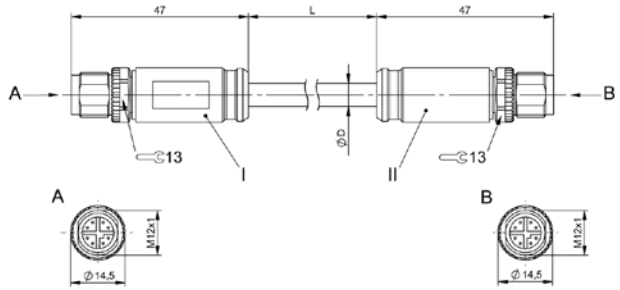

BCC M418-M418-6X-378-PS58N9-...

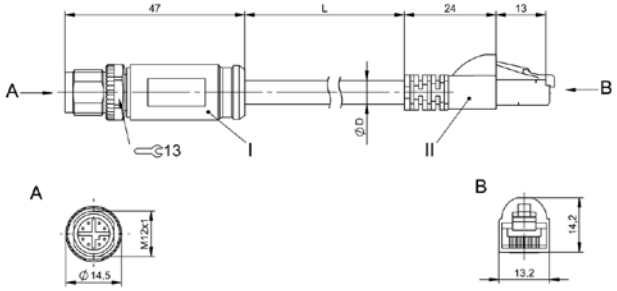

BCC M418-E818-8X0-723-PS58N9-...

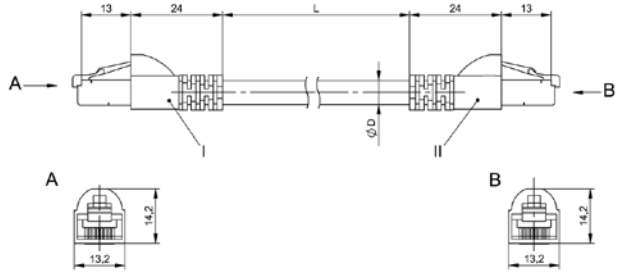

BCC E818-E818-90-377-PS58N9-...

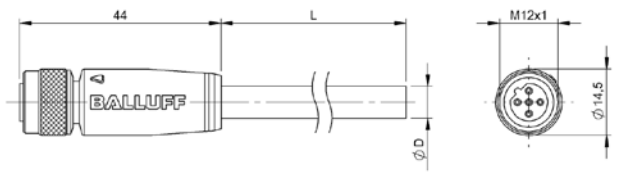

BCC M415-0000-1B-031-PS72N1-...

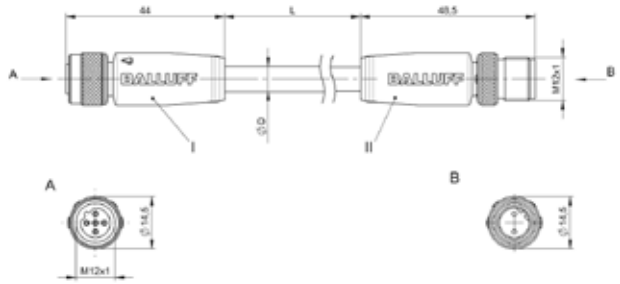

BCC M415-M412-3B-329-PS72N1-...

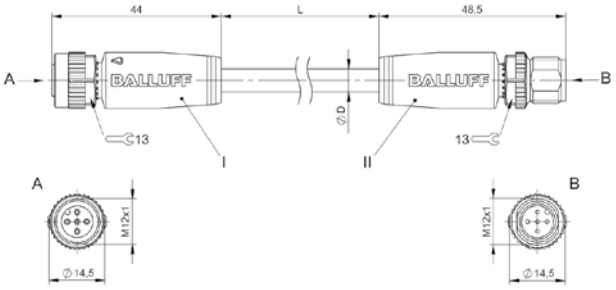

BCC M415-M415-3A-330-...

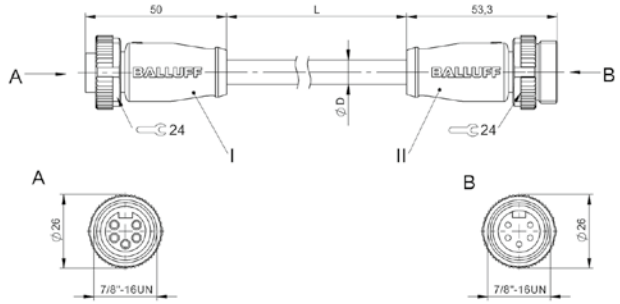

BCC A315-A315-30-330-...

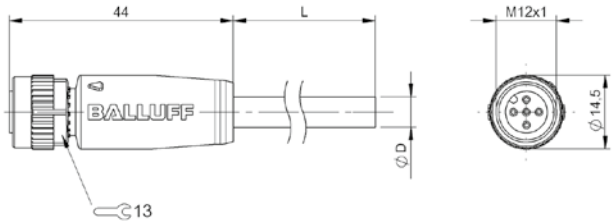

BCC M415-0000-1A-068-VS24N7-...

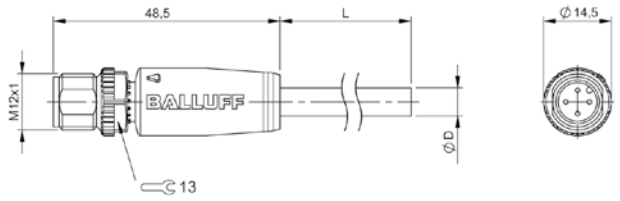

BCC M414-0000-2A-068-VS24N7-...

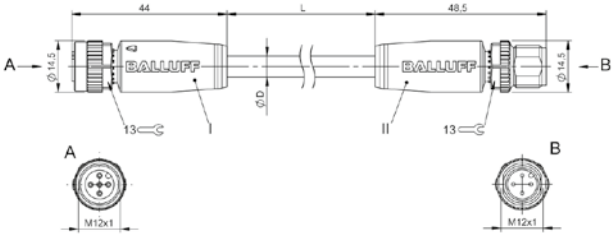

BCC M415-M414-3A-337-VS24N7-...

BCC M61C-0000-10-065-PX0BP4-...

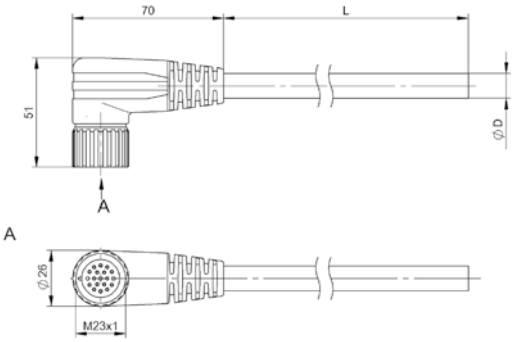

BCC M62C-0000-10-065-PX0BP4-...

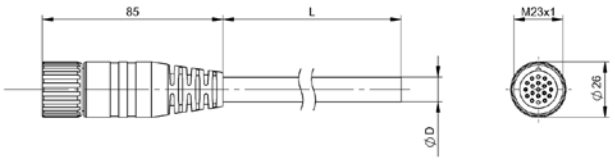

BCC M61L-0000-10-022-PX0LP4-...

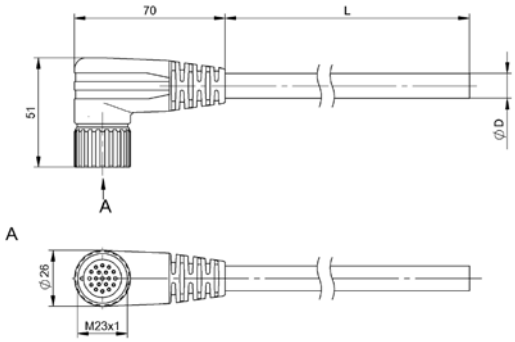

BCC M62L-0000-10-022-PX0LP4-...

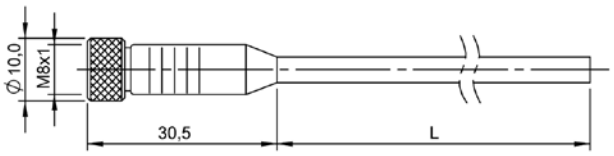

BCC0069, BCC006A, BCC006C

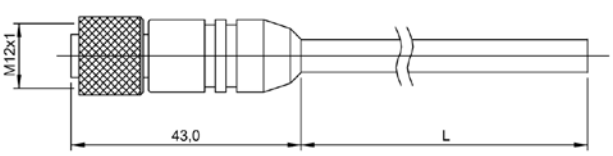

BCC0098, BCC0099, BCC009A

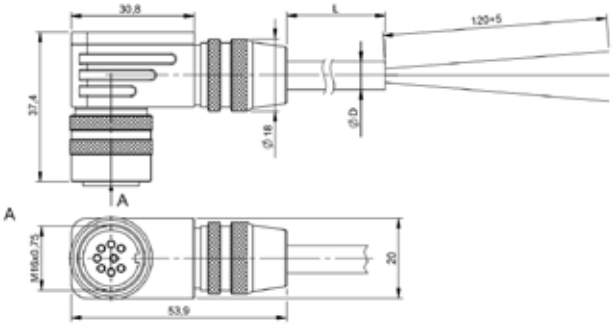

, BCC00UR, BCC00UU, BCC00UW

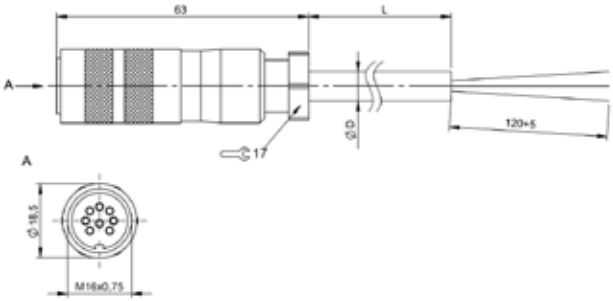

BCC00TU, BCC00TY, BCC00TZ

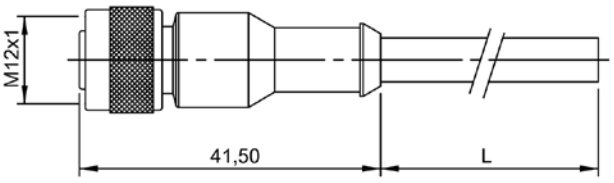

BCC00YE, BCC00YF, BCC00YH

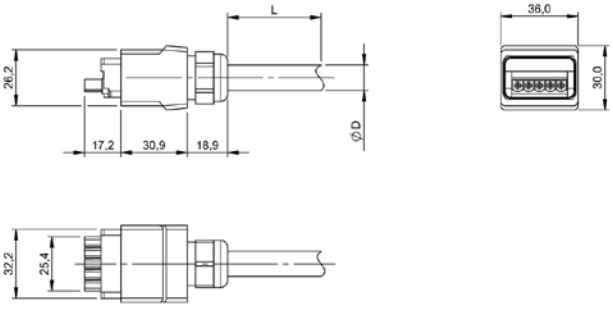

BCC0F4J, BCC0F4K, BCC0F4L

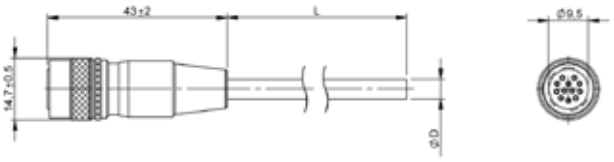

BCC0KL6, BCC0KL7, BCC0KL8

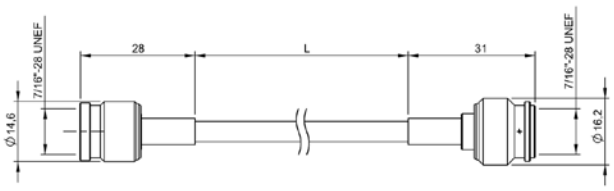

BAM01HL, BAM01HM, BAM01YR, BAM01HN, BAM01HP, BAM01WN, BAM01WP

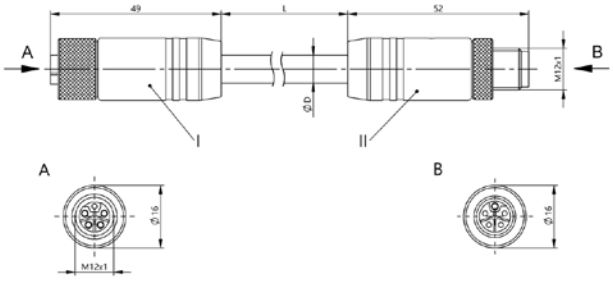

BCC0L2Y, BCC0L2Z, BCC0L30, BCC0L31, BCC0L32

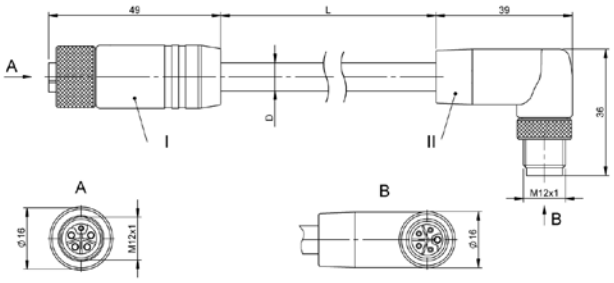

BCC0L3H, BCC0L3J, BCC0L3K, BCC0L3L, BCC0L3M

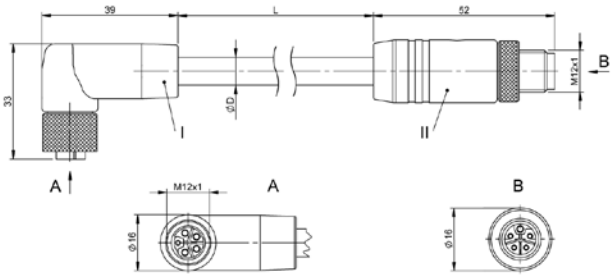

BCC0L3N, BCC0L3P, BCC0L3R, BCC0L3T, BCC0L3U

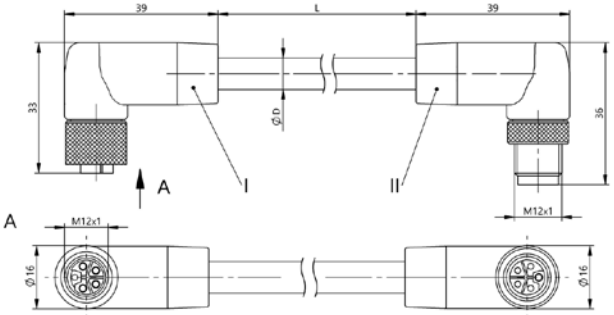

BCC0L33, BCC0L34, BCC0L35, BCC0L36, BCC0L37

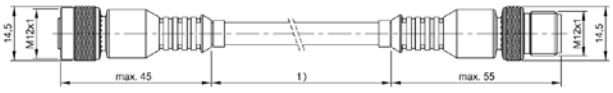

1) Cable length see text

BCC00R8, BCC00RA

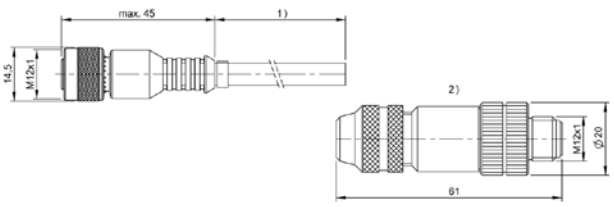

1) Cable length see text, 2) Connector included

BCC00R9, BCC00RC

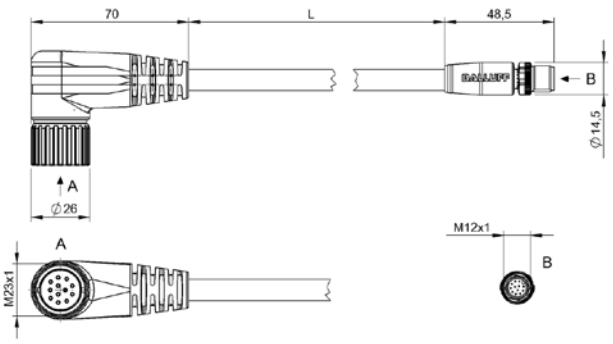

BCC088T, BCC088U

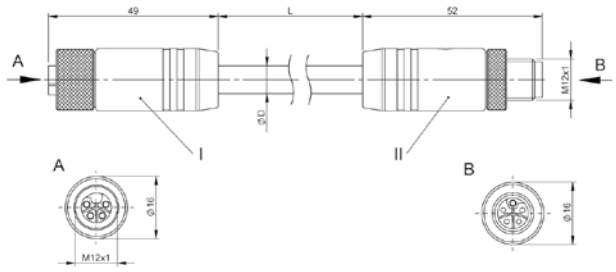

BCC0LUK, BCC0LUL, BCC0LUM, BCC0LUN, BCC0LUP

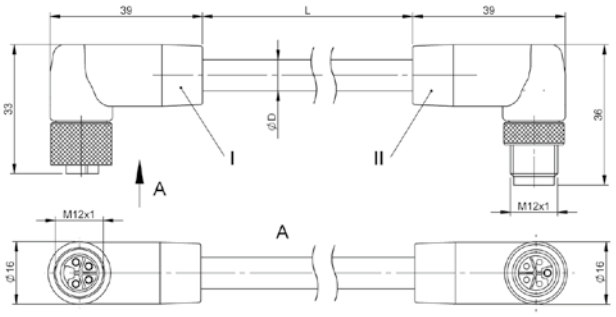

BCC0LW0, BCC0LW1, BCC0LW2, BCC0LW3, BCC0LW4

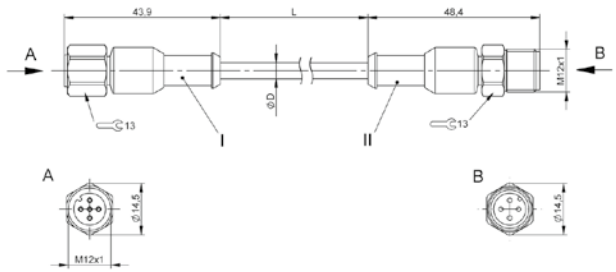

BCC0JRY, BCC0KT3, BCC0JRZ, BCC0KRM, BCC0JT0, BCC0JT1, BCC0JT2, BCC0JT3

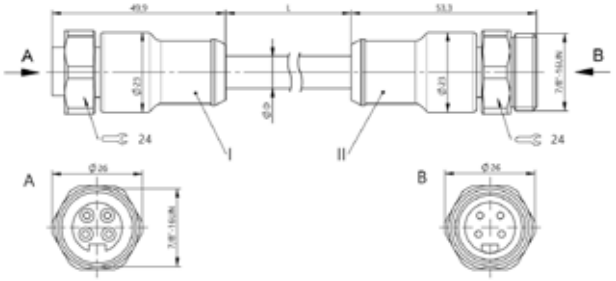

BCC0JTP, BCC0JTR, BCC0JTT, BCC0JTU, BCC0JTW, BCC0JTY

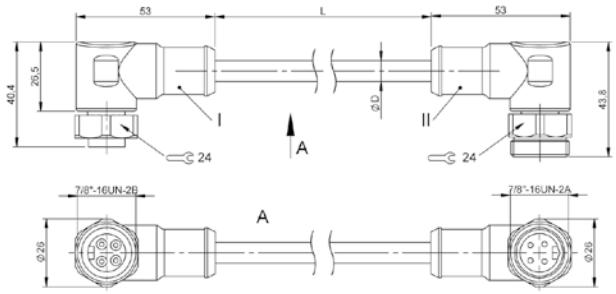

BCC0LNE, BCC0LNF

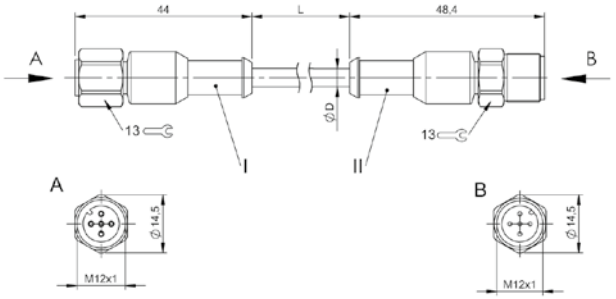

BCC0JT4, BCC0JT5, BCC0JT6, BCC0JT7, BCC0JT8, BCC0JT9

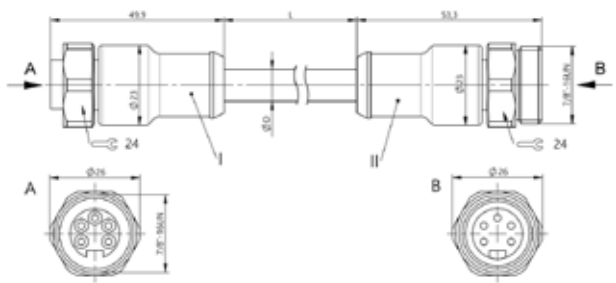

BCC0JTZ, BCC0JU0, BCC0JU1, BCC0JU2, BCC0JU3, BCC0JU4

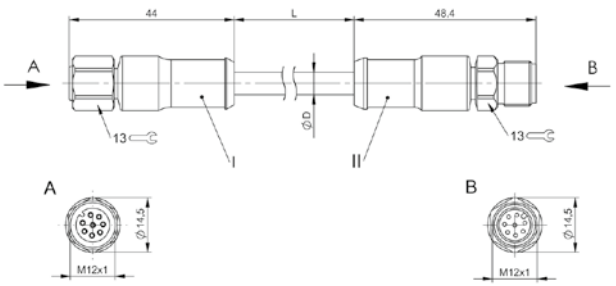

BCC0JW3, BCC0JW4, BCC0JW5, BCC0JW6, BCC0JW7

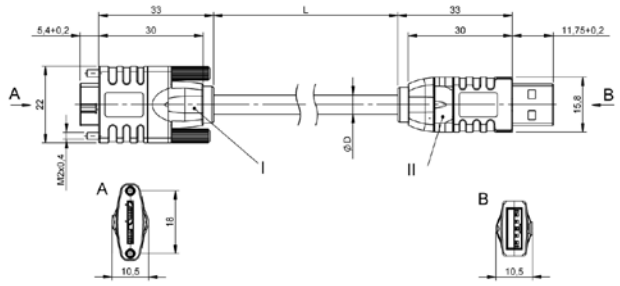

BCC0KL9, BCC0KLA, BCC0KLC

Robust splitters for rapid, reliable connections

Y-SPLITTERS

With our Y-splitters, you can collect, connect and split two signals in the field. Our comprehensive program offers robust and industrial-grade Y-splitters with various designs.
All splitters ensure a rapid and reliable connection.

The most important benefits

- Connecting different lines
- Comprehensive product range
- Various designs
- Reliable and rapid connection
- High dust and water protection
- Robust and industrial grade

	BCC M414-M313-M313 ...	
Connection	M12 male, A-coded/ M8 female, A-coded/ M8 female, A-coded	
Version	straight/straight/straight	
Rated voltage	60 V AC/DC	
Rated current	4 A	
Degree of protection	IP67/IP67, IP69K/IP67, IP69K	
PUR, black	BCC M414-M313-M313-U2026-_ _ _②	
PVC, yellow	BCC M414-M313-M313-U2012-_ _ _②	
TPE, yellow	–	
Approval/Conformity	CE, EAC	
For drawing see page	182	

M12 male/
M8 female/
M8 female

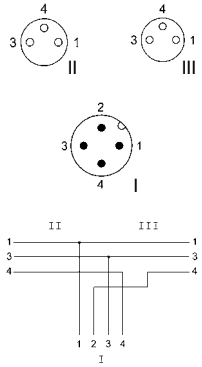

M12 male/
M12 female/
M12 female

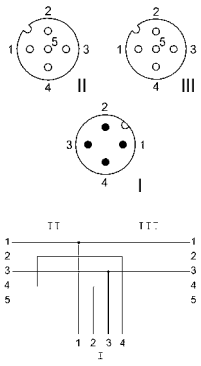

	BCC M414-M323-M323 ...	BCC M414-M415-M415 ...	BCC M414-M425-M425 ...
	M12 male, A-coded/ M8 female, A-coded/ M8 female, A-coded	M12 male, A-coded/ M12 female, A-coded/ M12 female, A-coded	M12 male, A-coded/ M12 female, A-coded/ M12 female, A-coded
	straight/angled/angled	straight/straight/straight	straight/angled/angled
	60 V AC/DC	250 V AC/DC	250 V AC/DC
	4 A	4 A	4 A
	IP67/IP67, IP69K/IP67, IP69K	IP67/IP67, IP68, IP69K/IP67, IP68, IP69K	IP67/IP67, IP68, IP69K/IP67, IP68, IP69K
	–	BCC M414-M415-M415-U2028-_ _ _②	BCC M414-M425-M425-U2028-_ _ _②
	BCC M414-M323-M323-U2012-_ _ _②	BCC M414-M415-M415-U2010-_ _ _②	BCC M414-M425-M425-U2010-_ _ _②
	–	BCC M414-M415-M415-U2002-_ _ _②	BCC M414-M425-M425-U2002-_ _ _②
	CE, EAC	EAC	EAC
	182	182	182

Material	Color	Number of conductors × conductor cross-section	Cable temperature fixed in place	Cable temperature flexed
UNSHIELDED				
PUR	Black	3 × 0.34 mm²	–50...+90 °C	–25...+90 °C
PVC	Yellow	3 × AWG22	–40...+105 °C	–5...+105 °C
TPE	Yellow	3 × AWG22	–50...+90 °C	–25...+105 °C

②	Cable length
003	0.3 m
006	0.6 m
010	1 m
020	2 m
050	5 m

Other cable lengths on request!

Connection		
Version		
Rated voltage	No LED	
	with LED	
Rated current		
Degree of protection		
No protection circuit, no LED		
With suppressor diode, with PNP-LED		
Approval/Conformity		
For drawing see page		

M12 male/
DIN A, 18 mm/
DIN A, 18 mm

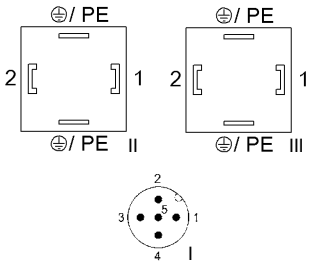

DIN A, 18 mm/
DIN A, 18 mm/
M12 male

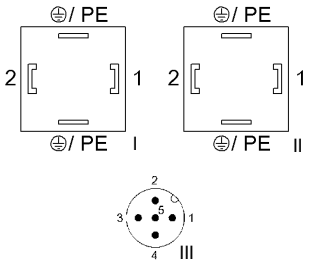

No protection circuit,
no LED

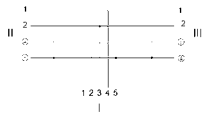

With suppressor dio-
de, with PNP-LED*

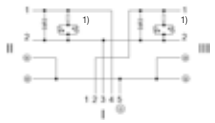

With suppressor dio-
de, with PNP-LED*

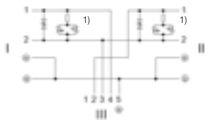

* 1) LED yellow

BCC M415-VA04-VA04 ...	BCC VA04-VA04-M415 ...
M12 male, A-coded/ DIN A, 18 mm, 0°/180°, female/ DIN A, 18 mm, 0°/180°, female	DIN A, 18 mm, 0°/180°, female/ DIN A, 18 mm, 0°/180°, female/ M12 male, A-coded
straight/angled/angled	angled/angled/straight
60 V AC/DC	–
30 V AC/DC	30 V AC/DC
4 A	4 A
IP67/IP67/IP67	IP67/IP67/IP67
BCC M415-VA04-VA04-U2005-_ _ _②	–
BCC M415-VA04-VA04-U2004-_ _ _②	BCC VA04-VA04-M415-T4075-_ _ _②
CE, EAC	CE, EAC
182	183

Material	Color	Number of conductors × conductor cross-section	Cable temperature fixed in place	Cable temperature flexed
UNSHIELDED				
PUR	Black	3 × 0.5 mm²	–50...–80 °C	–25...+80 °C

②	Cable length
BCC M415-VA04-VA04 ...	
005	0.5 m
010	1 m
BCC VA04-VA04-M415 ...	
002	0.2 m
004	0.4 m

Other cable lengths on request!

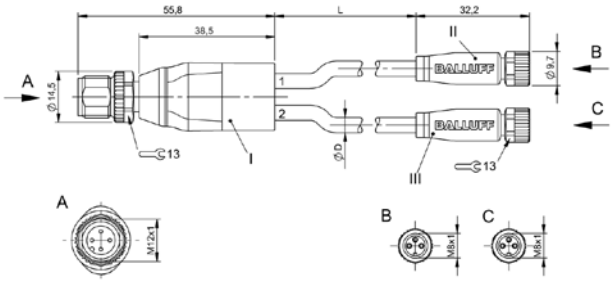

BCC M414-M313-M313-U2026-...

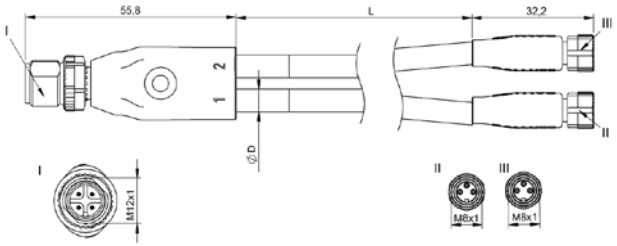

BCC M414-M313-M313-U2012-...

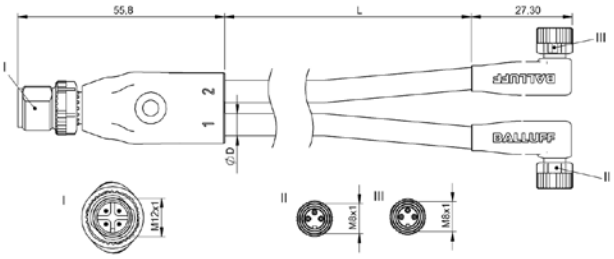

BCC M414-M323-M323-U2012-...

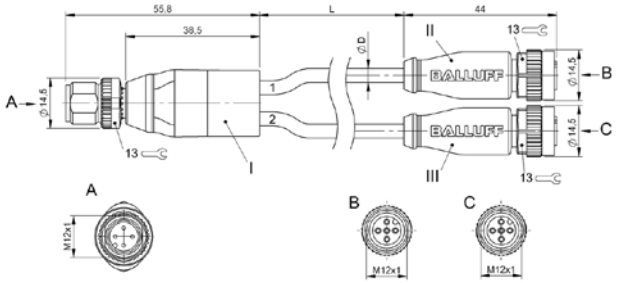

BCC M414-M415-M415-U2028-...

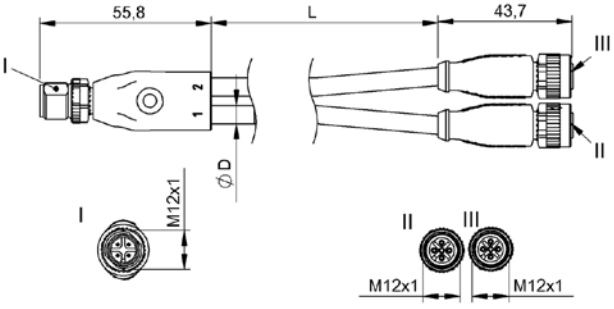

BCC M414-M415-M415-U2010-...
BCC M414-M415-M415-U2002-...

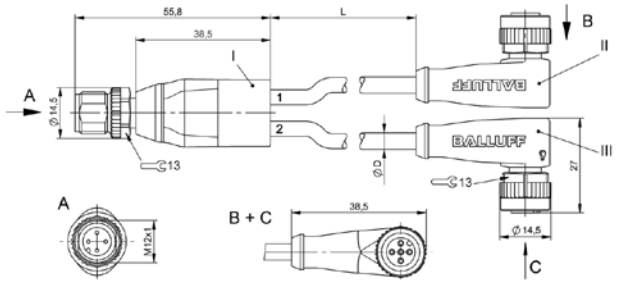

BCC M414-M425-M425-U2028-...

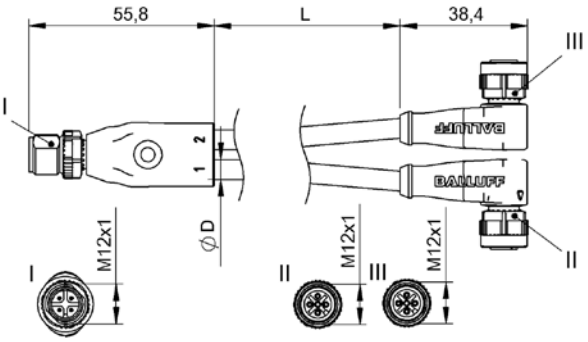

BCC M414-M425-M425-U2010-...
BCC M414-M425-M425-U2002-...

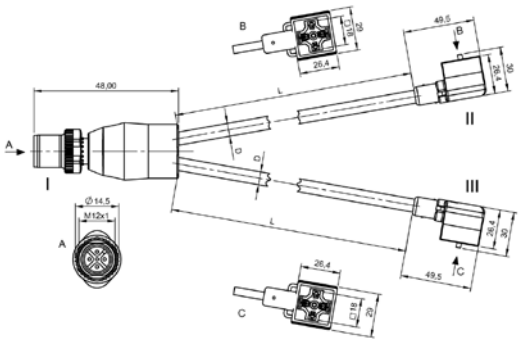

BCC M415-VA04-VA04-U2004-...
BCC M415-VA04-VA04-U2005-...

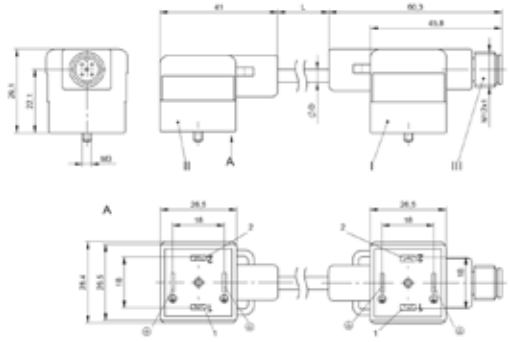

BCC VA04-VA04-M415-T4075-...

Splitters without wires ensure secure connection

TEES

For reliable gathering, connecting and distributing two signals Balluff provides a wide range of tees. Our solutions are distinguished by their small, narrow and compact design and are available in different form factors.

Our wide product offering includes tees with M8, M12 and 7/8“ connection, which are appropriate for 3-, 4- and 5-wire cables. Different protective circuits and variants without, with one or with two mounting holes offer you great flexibility.

The most important benefits

- Small, narrow and compact
- Extensive product range with various designs
- For reliable, fast connecting
- Robust and industrial grade
- Resistant to shocks and vibration
- Protection type IP67, optional IP68
- High-quality materials
- Bright LEDs
- Flexibly applicable – various wirings, variants without, with one or with two mounting holes

Do you need more details? Our Product Finder at www.balluff.com provides you with product-specific information, including technical drawings, data sheets, user guides and more for each individual product. All items are available for download.

	BCC0AA5 BCC A313-A313-A313-T0021-000	
Connection 1	7/8“-16 UN-Female, 3-pole	
Connection 2	7/8“-16 UN-Female, 3-pole	
Connection 3	7/8“-16 UN-Male, 3-pole	
Operating voltage Ub	300 VDC / 300 VAC	
Rated current (40 °C)	9.0 A	
Protection degree	IP67	
Ambient temperature	-25...80 °C	
Approval/Conformity	EAC	
Productview	Page 196	

	BCC0AA6 BCC A314-A314-A314-T0022-000	BCC0AA7 BCC A315-A315-A315-T0023-000	BCC0F5C BCC M314-M313-M313-U0056-000
	7/8“-16 UN-Female, 4-pole	7/8“-16 UN-Female, 5-pole	M8x1-Male, 4-pole, A-coded
	7/8“-16 UN-Female, 4-pole	7/8“-16 UN-Female, 5-pole	M8x1-Female, 3-pole, A-coded
	7/8“-16 UN-Male, 4-pole	7/8“-16 UN-Male, 5-pole	M8x1-Female, 3-pole, A-coded
	300 VDC / 300 VAC	300 VDC / 300 VAC	60 VDC / 60 VAC
	9.0 A	9.0 A	4.0 A
	IP67	IP67	IP68
	-25...80 °C	-25...80 °C	-25...85 °C
	EAC	EAC	EAC
	Page 196	Page 196	Page 196

	BCC09JC BCC M415-M313-M313-U0014-000	
Connection 1	M12x1-Male, 4-pole, A-coded	
Connection 2	M8x1-Female, 3-pole, A-coded	
Connection 3	M8x1-Female, 3-pole, A-coded	
Operating voltage Ub	60 VDC / 60 VAC	
Rated current (40 °C)	4.0 A	
Protection degree	IP67	
Ambient temperature	-25...80 °C	
Approval/Conformity	EAC	
Productview	Page 196	

	BCC089P BCC M415-M415-M415-U0003-000	BCC08CA BCC M415-M415-M415-U0007-000	BCC09MU BCC M415-M415-M415-U0016-000
	M12x1-Male, 5-pole, A-coded	M12x1-Female, 5-pole, A-coded	M12x1-Male, 5-pole, A-coded
	M12x1-Female, 4-pole, A-coded	M12x1-Male, 5-pole, A-coded	M12x1-Female, 5-pole, A-coded
	M12x1-Female, 4-pole, A-coded	M12x1-Female, 5-pole, A-coded	M12x1-Female, 5-pole, A-coded
	125 VDC / 125 VAC	60 VDC / 60 VAC	125 VDC / 125 VAC
	4.0 A	4.0 A	4.0 A
	IP67	IP67	IP67
	-25...80 °C	-25...90 °C	-20...80 °C
	cURus, EAC	EAC	cURus, EAC
	Page 196	Page 196	Page 196

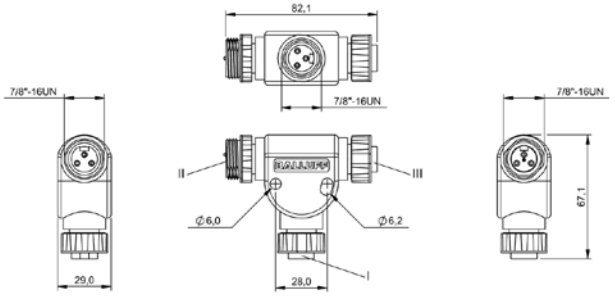

BCC0AA5

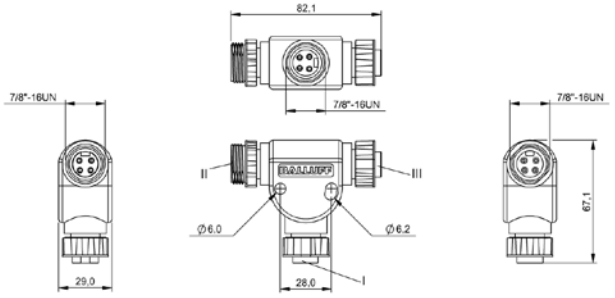

BCC0AA6

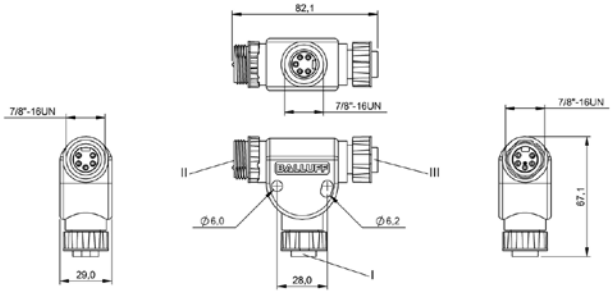

BCC0AA7

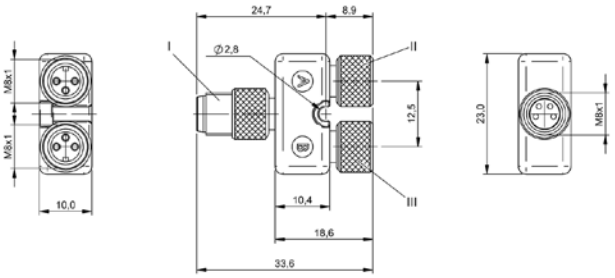

BCC0F5C

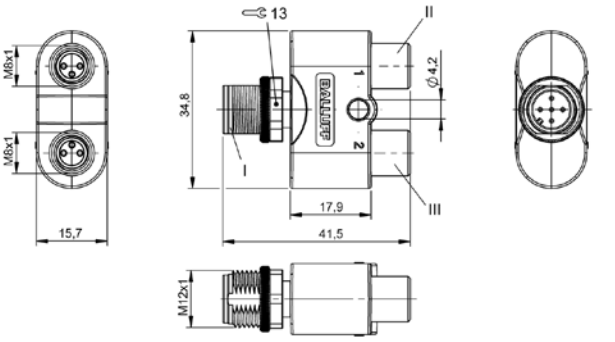

BCC09JC

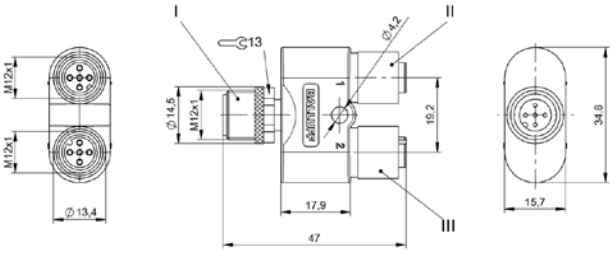

BCC089P, BCC09MU

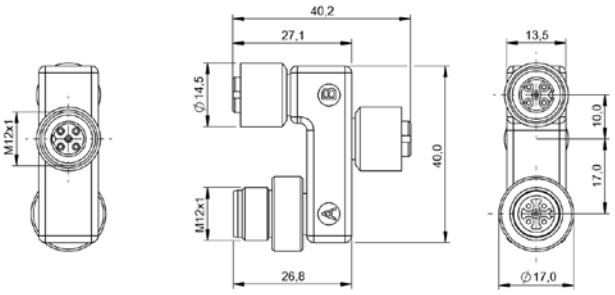

BCC08CA

The right connector for every industry

FIELD ATTACHABLES

Balluff offers you an extensive product range of field attachables for the secure transmission of signals, data and power. From various designs and housing materials, you can select exactly the product that fits your application.
All plug connectors are extremely robust and industrial grade.

The most important benefits

- Large selection for every industry
- Various designs
- Various housing materials
- Secure transmission of signals, data and power
- Robust and industrial grade

Do you need more details? Our Product Finder at www.balluff.com provides you with product-specific information, including technical drawings, data sheets, user guides and more for each individual product. All items are available for download.

	BCC0AT9 BCC A333-0000-10-000-61X3A5-000	
Connection	7/8“-16 UN-Female, straight, 3-pole	
Number of connectable contacts	3	
Connection cross-section	0.14...1.5 mm²	
Type of wire mounting	Screw terminals	
Cable diameter D	8...10 mm	
Operating voltage Ub	600 VDC / 600 VAC	
Rated current (40 °C)	9.0 A	
Protection degree	IP67	
Ambient temperature	-25...85 °C	
Approval/Conformity	EAC, cURus	
Productview	Page 244	

	BCC0ATA BCC A333-0000-10-000-71X3A5-000	BCC0ATC BCC A333-0000-20-000-61X3A5-000	BCC0ATE BCC A333-0000-20-000-71X3A5-000
	7/8“-16 UN-Female, straight, 3-pole	7/8“-16 UN-Male, straight, 3-pole	7/8“-16 UN-Male, straight, 3-pole
	3	3	3
	0.14...1.5 mm²	0.14...1.5 mm²	0.14...1.5 mm²
	Screw terminals	Screw terminals	Screw terminals
	10...12 mm	8...10 mm	10...12 mm
	600 VDC / 600 VAC	600 VDC / 600 VAC	600 VDC / 600 VAC
	9.0 A	9.0 A	9.0 A
	IP67	IP67	IP67
	-25...85 °C	-25...85 °C	-25...85 °C
	EAC, cURus	EAC, cURus	EAC, cURus
	Page 244	Page 244	Page 244

	BCC0706 BCC A334-0000-10-000-51X4A5-000	
Connection	7/8“-16 UN-Female, straight, 4-pole	
Number of connectable contacts	4	
Connection cross-section	0.14...1.5 mm²	
Type of wire mounting	Screw terminals	
Cable diameter D	6...8 mm	
Operating voltage Ub	600 VDC / 600 VAC	
Rated current (40 °C)	9.0 A	
Protection degree	IP67	
Ambient temperature	-25...85 °C	
Approval/Conformity	EAC, cURus	
Productview	Page 244	

	BCC0707 BCC A334-0000-10-000-61X4A5-000	BCC0708 BCC A334-0000-10-000-71X4A5-000	BCC0709 BCC A334-0000-20-000-51X4A5-000
	7/8“-16 UN-Female, straight, 4-pole	7/8“-16 UN-Female, straight, 4-pole	7/8“-16 UN-Male, straight, 4-pole
	4	4	4
	0.14...1.5 mm²	0.14...1.5 mm²	0.14...1.5 mm²
	Screw terminals	Screw terminals	Screw terminals
	8...10 mm	10...12 mm	6...8 mm
	600 VDC / 600 VAC	600 VDC / 600 VAC	600 VDC / 600 VAC
	9.0 A	9.0 A	9.0 A
	IP67	IP67	IP67
	-25...85 °C	-25...85 °C	-25...85 °C
	EAC, cURus	EAC, cURus	EAC, cURus
	Page 244	Page 244	Page 244

	BCC070A BCC A334-0000-20-000-61X4A5-000	
Connection	7/8“-16 UN-Male, straight, 4-pole	
Number of connectable contacts	4	
Connection cross-section	0.14...1.5 mm²	
Type of wire mounting	Screw terminals	
Cable diameter D	8...10 mm	
Operating voltage Ub	600 VDC / 600 VAC	
Rated current (40 °C)	9.0 A	
Protection degree	IP67	
Ambient temperature	-25...85 °C	
Approval/Conformity	EAC, cURus	
Productview	Page 245	

	BCC070C BCC A334-0000-20-000-71X4A5-000	BCC070E BCC A335-0000-10-000-51X5A5-000	BCC070F BCC A335-0000-10-000-61X5A5-000
	7/8“-16 UN-Male, straight, 4-pole	7/8“-16 UN-Female, straight, 5-pole	7/8“-16 UN-Female, straight, 5-pole
	4	5	5
	0.14...1.5 mm²	0.14...1.5 mm²	0.14...1.5 mm²
	Screw terminals	Screw terminals	Screw terminals
	10...12 mm	6...8 mm	8...10 mm
	600 VDC / 600 VAC	600 VDC / 600 VAC	600 VDC / 600 VAC
	9.0 A	9.0 A	9.0 A
	IP67	IP67	IP67
	-25...85 °C	-25...85 °C	-25...85 °C
	EAC, cURus	EAC, cURus	EAC, cURus
	Page 245	Page 245	Page 245

	BCC070H BCC A335-0000-10-000-71X5A5-000	
Connection	7/8“-16 UN-Female, straight, 5-pole	
Number of connectable contacts	5	
Connection cross-section	0.14...1.5 mm²	
Type of wire mounting	Screw terminals	
Cable diameter D	10...12 mm	
Operating voltage Ub	600 VDC / 600 VAC	
Rated current (40 °C)	9.0 A	
Protection degree	IP67	
Ambient temperature	-25...85 °C	
Approval/Conformity	EAC, cURus	
Productview	Page 245	

	BCC0ATH BCC A335-0000-10-000-81X5A5-000	BCC070J BCC A335-0000-20-000-51X5A5-000	BCC070K BCC A335-0000-20-000-61X5A5-000
	7/8“-16 UN-Female, straight, 5-pole	7/8“-16 UN-Male, straight, 5-pole	7/8“-16 UN-Male, straight, 5-pole
	5	5	5
	0.14...1.5 mm²	0.14...1.5 mm²	0.14...1.5 mm²
	Screw terminals	Screw terminals	Screw terminals
	12...14 mm	6...8 mm	8...10 mm
	600 VDC / 600 VAC	600 VDC / 600 VAC	600 VDC / 600 VAC
	9.0 A	9.0 A	9.0 A
	IP67	IP67	IP67
	-25...85 °C	-25...85 °C	-25...85 °C
	EAC, cURus	EAC, cURus	EAC, cURus
	Page 245	Page 245	Page 245

	BCC070L BCC A335-0000-20-000-71X5A5-000	
Connection	7/8“-16 UN-Male, straight, 5-pole	
Number of connectable contacts	5	
Connection cross-section	0.14...1.5 mm²	
Type of wire mounting	Screw terminals	
Cable diameter D	10...12 mm	
Operating voltage Ub	600 VDC / 600 VAC	
Rated current (40 °C)	9.0 A	
Protection degree	IP67	
Ambient temperature	-25...85 °C	
Approval/Conformity	EAC, cURus	
Productview	Page 245	

	BCC0ATF BCC A335-0000-20-000-81X5A5-000	BCC0HLN BCC M333-0000-10-000-13X325-000	BCC0HLU BCC M333-0000-10-000-13X350-000
	7/8“-16 UN-Male, straight, 5-pole	M8x1-Female, straight, 3-pole, A-coded	M8x1-Female, straight, 3-pole, A-coded
	5	3	3
	0.14...1.5 mm²	0.08...0.25 mm²	0.25...0.5 mm²
	Screw terminals	Insulation displacement connector technology	Insulation displacement connector technology
	12...14 mm	2.5...5.2 mm	2.5...5.2 mm
	600 VDC / 600 VAC	60 VDC / 60 VAC	60 VDC / 60 VAC
	9.0 A	4.0 A	4.0 A
	IP67	IP67	IP67
	-25...85 °C	-25...85 °C	-25...85 °C
	EAC, cURus	EAC	EAC
	Page 245	Page 246	Page 246

	BCC06Z1 BCC M333-0000-10-000-31X350-000	
Connection	M8x1-Female, straight, 3-pole, A-coded	
Number of connectable contacts	3	
Connection cross-section	0.14...0.5 mm²	
Type of wire mounting	Screw terminals	
Cable diameter D	3.5...5 mm	
Operating voltage Ub	60 VDC / 60 VAC	
Rated current (40 °C)	4.0 A	
Protection degree	IP67	
Ambient temperature	-25...85 °C	
Approval/Conformity	EAC, cULus	
Productview	Page 246	

	BCC02HC BKS-S111-RT13	BCC0HLP BCC M333-0000-20-000-13X325-000	
	M8x1-Female, straight, 3-pole, A-coded	M8x1-Male, straight, 3-pole, A-coded	
	3	3	
	0.14...0.34 mm²	0.08...0.25 mm²	
	Insulation displacement connector technology	Insulation displacement connector technology	
	2.5...5.1 mm	2.5...5.2 mm	
	32 VDC / 32 VAC	60 VDC / 60 VAC	
	4.0 A	4.0 A	
	IP67	IP67	
	-40...85 °C	-25...85 °C	
	cURus, EAC	EAC	
	Page 246	Page 246	

	BCC0HLW BCC M333-0000-20-000-13X350-000	
Connection	M8x1-Male, straight, 3-pole, A-coded	
Number of connectable contacts	3	
Connection cross-section	0.25...0.5 mm²	
Type of wire mounting	Insulation displacement connector technology	
Cable diameter D	2.5...5.2 mm	
Operating voltage Ub	60 VDC / 60 VAC	
Rated current (40 °C)	4.0 A	
Protection degree	IP67	
Ambient temperature	-25...85 °C	
Approval/Conformity	EAC	
Productview	Page 246	

	BCC0E7N BCC M333-0000-20-000-31X350-000-C027	BCC02HE BKS-S113-RT13	BCC0HLR BCC M334-0000-10-000-13X425-000
	M8x1-Male, straight, 3-pole, A-coded	M8x1-Male, straight, 3-pole, A-coded	M8x1-Female, straight, 4-pole, A-coded
	3	3	4
	0.14...0.5 mm²	0.14...0.34 mm²	0.08...0.25 mm²
	Screw terminals	Insulation displacement connector technology	Insulation displacement connector technology
	2.2...3.5 mm	2.5...5.1 mm	2.5...5.2 mm
	60 VDC / 60 VAC	32 VDC / 32 VAC	30 VDC / 30 VAC
	4.0 A	4.0 A	4.0 A
	IP67	IP67	IP67
	-25...85 °C	-40...85 °C	-25...85 °C
	EAC	cURus, EAC	EAC
	Page 246	Page 246	Page 246

	BCC0HLY BCC M334-0000-10-000-13X450-000	
Connection	M8x1-Female, straight, 4-pole, A-coded	
Number of connectable contacts	4	
Connection cross-section	0.25...0.5 mm²	
Type of wire mounting	Insulation displacement connector technology	
Cable diameter D	2.5...5.2 mm	
Operating voltage Ub	30 VDC / 30 VAC	
Rated current (40 °C)	4.0 A	
Protection degree	IP67	
Ambient temperature	-25...85 °C	
Approval/Conformity	EAC	
Productview	Page 247	

	BCC06Z5 BCC M334-0000-10-000-31X450-000	BCC02HF BKS-S216-RT14	BCC0HLT BCC M334-0000-20-000-13X425-000
	M8x1-Female, straight, 4-pole, A-coded	M8x1-Female, straight, 4-pole, A-coded	M8x1-Male, straight, 4-pole, A-coded
	4	4	4
	0.14...0.5 mm²	0.14...0.34 mm²	0.08...0.25 mm²
	Screw terminals	Insulation displacement connector technology	Insulation displacement connector technology
	3.5...5 mm	2.5...5.1 mm	2.5...5.2 mm
	60 VDC / 60 VAC	32 VDC / 32 VAC	30 VDC / 30 VAC
	4.0 A	4.0 A	4.0 A
	IP67	IP67	IP67
	-25...85 °C	-40...85 °C	-25...85 °C
	EAC, cULus	cURus, EAC	EAC
	Page 247	Page 247	Page 247

	BCC0HLZ BCC M334-0000-20-000-13X450-000	
Connection	M8x1-Male, straight, 4-pole, A-coded	
Number of connectable contacts	4	
Connection cross-section	0.25...0.5 mm²	
Type of wire mounting	Insulation displacement connector technology	
Cable diameter D	2.5...5.2 mm	
Operating voltage Ub	30 VDC / 30 VAC	
Rated current (40 °C)	4.0 A	
Protection degree	IP67	
Ambient temperature	-25...85 °C	
Approval/Conformity	EAC	
Productview	Page 247	

	BCC06Z7 BCC M334-0000-20-000-31X450-000	BCC02HH BKS-S218-RT14	BCC06M4 BCC M434-0000-2A-000-41X475-000
	M8x1-Male, straight, 4-pole, A-coded	M8x1-Male, straight, 4-pole, A-coded	M12x1-Male, straight, 4-pole, A-coded
	4	4	4
	0.14...0.5 mm²	0.14...0.34 mm²	0.14...0.75 mm²
	Screw terminals	Insulation displacement connector technology	Screw terminals
	3.5...5 mm	2.5...5.1 mm	4...6 mm
	60 VDC / 60 VAC	32 VDC / 32 VAC	250 VDC / 250 VAC
	4.0 A	4.0 A	4.0 A
	IP67	IP67	IP67
	-25...85 °C	-40...85 °C	-25...85 °C
	EAC, cULus	cURus, EAC	cURus, EAC
	Page 247	Page 247	Page 247

	BCC08C0 BCC M434-0000-2A-000-43X434-000	
Connection	M12x1-Male, straight, 4-pole, A-coded	
Number of connectable contacts	4	
Connection cross-section	0.14...0.34 mm²	
Type of wire mounting	Insulation displacement connector technology	
Cable diameter D	3.5...6 mm	
Operating voltage Ub	125 VDC / 125 VAC	
Rated current (40 °C)	4.0 A	
Protection degree	IP67	
Ambient temperature	-25...80 °C	
Approval/Conformity	EAC	
Productview	Page 248	

	BCC0F9M BCC M434-0000-2A-000-45X450-000	BCC06F7 BCC M434-0000-2A-000-51X475-000	BCC06Y5 BCC M434-0000-2A-000-55X450-000
	M12x1-Male, straight, 4-pole, A-coded	M12x1-Male, straight, 4-pole, A-coded	M12x1-Male, straight, 4-pole, A-coded
	4	4	4
	0.14...0.5 mm²	0.14...0.75 mm²	0.14...0.5 mm²
	Spring clamp terminals	Screw terminals	Spring clamp terminals
	4...6 mm	6...8 mm	6...8 mm
	250 VDC / 250 VAC	250 VDC / 250 VAC	250 VDC / 250 VAC
	4.0 A	4.0 A	4.0 A
	IP67	IP67	IP67
	-25...85 °C	-25...85 °C	-25...85 °C
	EAC	cURus, EAC	EAC
	Page 248	Page 248	Page 248

	BCC0869 BCC M474-0000-2A-000-01X475-000	
Connection	M12x1-Male, straight, 4-pole, A-coded	
Number of connectable contacts	4	
Connection cross-section	0.14...0.75 mm²	
Type of wire mounting	Screw terminals	
Cable diameter D	5...8 mm	
Operating voltage Ub	250 VDC / 250 VAC	
Rated current (40 °C)	4.0 A	
Protection degree	IP67	
Ambient temperature	-25...85 °C	
Approval/Conformity	EAC	
Productview	Page 248	

	BCC02H9 BKS-S109-RT14	BCC06ZC BCC M444-0000-2A-000-41X475-000	BCC06ZE BCC M444-0000-2A-000-51X475-000
	M12x1-Male, straight, 4-pole, A-coded	M12x1-Male, angled, 4-pole, A-coded	M12x1-Male, angled, 4-pole, A-coded
	4	4	4
	0.14...0.34 mm²	0.14...0.75 mm²	0.14...0.75 mm²
	Insulation displacement connector technology	Screw terminals	Screw terminals
	2.9...5.1 mm	4...6 mm	6...8 mm
	32 VDC / 32 VAC	250 VDC / 250 VAC	250 VDC / 250 VAC
	4.0 A	4.0 A	4.0 A
	IP67	IP67	IP67
	-40...85 °C	-25...85 °C	-25...85 °C
	cURus, EAC	cURus, EAC	cURus, EAC
	Page 248	Page 248	Page 248

	BCC02H7 BKS-S 77-RT04	
Connection	M12x1-Male, angled, 4-pole, A-coded	
Number of connectable contacts	4	
Connection cross-section	0.25...0.5 mm²	
Type of wire mounting	Insulation displacement connector technology	
Cable diameter D	4...5.1 mm	
Operating voltage Ub	32 VDC / 32 VAC	
Rated current (40 °C)	4.0 A	
Protection degree	IP67	
Ambient temperature	-40...85 °C	
Approval/Conformity	cURus, EAC	
Productview	Page 248	

	BCC06Z9 BCC M435-0000-1A-000-41X475-000	BCC06ZF BCC M435-0000-1A-000-41X575-000	BCC06ZY BCC M435-0000-1A-000-43X434-000
	M12x1-Female, straight, 5-pole, A-coded	M12x1-Female, straight, 5-pole, A-coded	M12x1-Female, straight, 5-pole, A-coded
	4	5	4
	0.14...0.75 mm²	0.14...0.75 mm²	0.14...0.34 mm²
	Screw terminals	Screw terminals	Insulation displacement connector technology
	4...6 mm	4...6 mm	3.5...6 mm
	250 VDC / 250 VAC	125 VDC / 125 VAC	250 VDC / 250 VAC
	4.0 A	4.0 A	4.0 A
	IP67	IP67	IP67
	-25...85 °C	-25...85 °C	-40...80 °C
	cURus, EAC	cURus, EAC	EAC
	Page 248	Page 248	Page 249

	BCC0F9N BCC M435-0000-1A-000-45X450-000	
Connection	M12x1-Female, straight, 5-pole, A-coded	
Number of connectable contacts	4	
Connection cross-section	0.14...0.5 mm²	
Type of wire mounting	Spring clamp terminals	
Cable diameter D	4...6 mm	
Operating voltage Ub	250 VDC / 250 VAC	
Rated current (40 °C)	4.0 A	
Protection degree	IP67	
Ambient temperature	-25...85 °C	
Approval/Conformity	EAC	
Productview	Page 248	

	BCC06F6 BCC M435-0000-1A-000-51X475-000	BCC06W9 BCC M435-0000-1A-000-51X575-000	BCC06Y6 BCC M435-0000-1A-000-55X450-000
	M12x1-Female, straight, 5-pole, A-coded	M12x1-Female, straight, 5-pole, A-coded	M12x1-Female, straight, 5-pole, A-coded
	4	5	4
	0.14...0.75 mm²	0.14...0.75 mm²	0.14...0.5 mm²
	Screw terminals	Screw terminals	Spring clamp terminals
	6...8 mm	6...8 mm	6...8 mm
	250 VDC / 250 VAC	125 VDC / 125 VAC	250 VDC / 250 VAC
	4.0 A	4.0 A	4.0 A
	IP67	IP67	IP67
	-25...85 °C	-25...85 °C	-25...85 °C
	cURus, EAC	cURus, EAC	EAC
	Page 249	Page 249	Page 249

	BCC09JP BCC M435-0000-1A-000-A1X575-000	
Connection	M12x1-Female, straight, 5-pole, A-coded	
Number of connectable contacts	5	
Connection cross-section	0.14...0.75 mm²	
Type of wire mounting	Screw terminals	
Cable diameter D	2.1...3 mm	
Operating voltage Ub	125 VDC / 125 VAC	
Rated current (40 °C)	4.0 A	
Protection degree	IP67	
Ambient temperature	-25...85 °C	
Approval/Conformity	cURus, EAC	
Productview	Page 249	

	BCC06ZM BCC M475-0000-1A-000-01X475-000	BCC06ZN BCC M475-0000-1A-000-01X575-000	BCC02H8 BKS-S107-RT14
	M12x1-Female, straight, 5-pole, A-coded	M12x1-Female, straight, 5-pole, A-coded	M12x1-Female, straight, 5-pole, A-coded
	4	5	4
	0.14...0.75 mm²	0.14...0.75 mm²	0.14...0.34 mm²
	Screw terminals	Screw terminals	Insulation displacement connector technology
	5...8 mm	5...8 mm	2.9...5.1 mm
	250 VDC / 250 VAC	125 VDC / 125 VAC	32 VDC / 32 VAC
	4.0 A	4.0 A	4.0 A
	IP67	IP67	IP67
	-25...85 °C	-25...85 °C	-40...85 °C
	EAC	cURus, EAC	cURus, EAC
	Page 249	Page 249	Page 249

	BCC06YA BCC M435-0000-2A-000-41X575-000	
Connection	M12x1-Male, straight, 5-pole, A-coded	
Number of connectable contacts	5	
Connection cross-section	0.14...0.75 mm²	
Type of wire mounting	Screw terminals	
Cable diameter D	4...6 mm	
Operating voltage Ub	125 VDC / 125 VAC	
Rated current (40 °C)	4.0 A	
Protection degree	IP67	
Ambient temperature	-25...85 °C	
Approval/Conformity	cURus, EAC	
Productview	Page 249	

	BCC06EY BCC M435-0000-2A-000-51X575-000	BCC09JW BCC M435-0000-2A-000-A1X575-000	BCC086A BCC M475-0000-2A-000-01X575-000
	M12x1-Male, straight, 5-pole, A-coded	M12x1-Male, straight, 5-pole, A-coded	M12x1-Male, straight, 5-pole, A-coded
	5	5	5
	0.14...0.75 mm²	0.14...0.75 mm²	0.14...0.75 mm²
	Screw terminals	Screw terminals	Screw terminals
	6...8 mm	2.1...3 mm	5...8 mm
	125 VDC / 125 VAC	125 VDC / 125 VAC	250 VDC / 250 VAC
	4.0 A	4.0 A	4.0 A
	IP67	IP67	IP67
	-25...85 °C	-25...85 °C	-25...85 °C
	cURus, EAC	cURus, EAC	cURus, EAC
	Page 249	Page 249	Page 250

	BCC06ZA BCC M445-0000-1A-000-41X475-000	
Connection	M12x1-Female, angled, 5-pole, A-coded	
Number of connectable contacts	4	
Connection cross-section	0.14...0.75 mm²	
Type of wire mounting	Screw terminals	
Cable diameter D	4...6 mm	
Operating voltage Ub	250 VDC / 250 VAC	
Rated current (40 °C)	4.0 A	
Protection degree	IP67	
Ambient temperature	-40...85 °C	
Approval/Conformity	EAC	
Productview	Page 250	

	BCC06ZH BCC M445-0000-1A-000-41X575-000	BCC06Y8 BCC M445-0000-1A-000-51X475-000	BCC06ZJ BCC M445-0000-1A-000-51X575-000
	M12x1-Female, angled, 5-pole, A-coded	M12x1-Female, angled, 5-pole, A-coded	M12x1-Female, angled, 5-pole, A-coded
	5	4	5
	0.14...0.75 mm²	0.14...0.75 mm²	0.14...0.75 mm²
	Screw terminals	Screw terminals	Screw terminals
	4...6 mm	6...8 mm	6...8 mm
	125 VDC / 125 VAC	250 VDC / 250 VAC	125 VDC / 125 VAC
	4.0 A	4.0 A	4.0 A
	IP67	IP67	IP67
	-40...85 °C	-40...85 °C	-40...85 °C
	cURus, EAC	cURus, EAC	cURus, EAC
	Page 250	Page 250	Page 250

	BCC02H6 BKS-S 76-RT04	
Connection	M12x1-Female, angled, 5-pole, A-coded	
Number of connectable contacts	4	
Connection cross-section	0.25...0.5 mm²	
Type of wire mounting	Insulation displacement connector technology	
Cable diameter D	4...5.1 mm	
Operating voltage Ub	32 VDC / 32 VAC	
Rated current (40 °C)	4.0 A	
Protection degree	IP67	
Ambient temperature	-40...85 °C	
Approval/Conformity	cURus, EAC	
Productview	Page 250	

	BCC06ZK BCC M445-0000-2A-000-41X575-000	BCC06ZL BCC M445-0000-2A-000-51X575-000	BCC0A03 BCC M438-0000-1A-000-51X850-000
	M12x1-Male, angled, 5-pole, A-coded	M12x1-Male, angled, 5-pole, A-coded	M12x1-Female, straight, 8-pole, A-coded
	5	5	8
	0.14...0.75 mm²	0.14...0.75 mm²	0.14...0.5 mm²
	Screw terminals	Screw terminals	Screw terminals
	4...6 mm	6...8 mm	6...8 mm
	125 VDC / 125 VAC	125 VDC / 125 VAC	60 VDC / 60 VAC
	4.0 A	4.0 A	2.0 A
	IP67	IP67	IP67
	-40...85 °C	-40...85 °C	-25...85 °C
	cURus, EAC	cURus, EAC	cURus, EAC
	Page 250	Page 250	Page 251

	BCC04MC BCC M478-0000-1A-000-43X834-000	
Connection	M12x1-Female, straight, 8-pole, A-coded	
Number of connectable contacts	8	
Connection cross-section	0.14...0.34 mm²	
Type of wire mounting	Insulation displacement connector technology	
Cable diameter D	4...8 mm	
Operating voltage Ub	30 VDC / 30 VAC	
Rated current (40 °C)	1.75 A	
Protection degree	IP67	
Ambient temperature	-25...85 °C	
Approval/Conformity	EAC	
Productview	Page 251	

	BCC0A04 BCC M438-0000-2A-000-51X850-000	BCC0HAH BCC M478-0000-2A-000-41X850-000	BCC04ME BCC M488-0000-1A-000-43X834-000
	M12x1-Male, straight, 8-pole, A-coded	M12x1-Male, straight, 8-pole, A-coded	M12x1-Female, angled, 8-pole, A-coded
	8	8	8
	0.14...0.5 mm²	0.14...0.5 mm²	0.14...0.34 mm²
	Screw terminals	Screw terminals	Insulation displacement connector technology
	6...8 mm	4...6 mm	4...8 mm
	60 VDC / 60 VAC	30 VDC / 30 VAC	30 VDC / 30 VAC
	2.0 A	2.0 A	1.75 A
	IP67	IP67	IP67
	-25...85 °C	-25...85 °C	-25...85 °C
	cURus, EAC	EAC	EAC
	Page 251	Page 251	Page 251

	BCC0KR4 BCC M488-0000-2A-000-01X850-000	
Connection	M12x1-Male, angled, 8-pole, A-coded	
Number of connectable contacts	8	
Connection cross-section	0.14...0.5 mm²	
Type of wire mounting	Screw terminals	
Cable diameter D	5...8 mm	
Operating voltage Ub	30 VDC / 30 VAC	
Rated current (40 °C)	2.0 A	
Protection degree	IP67	
Ambient temperature	-40...85 °C	
Approval/Conformity	EAC	
Productview	Page 251	

	BCC0A05 BCC M43C-0000-1A-000-54XC25-000	BCC0A06 BCC M43C-0000-2A-000-54XC25-000	BCC0715 BCC M475-0000-1B-000-01X575-000
	M12x1-Female, straight, 12-pole, A-coded	M12x1-Male, straight, 12-pole, A-coded	M12x1-Female, straight, 5-pole, B-coded
	12	12	5
	0.14...0.25 mm²	0.14...0.25 mm²	0.14...0.75 mm²
	Solder connections	Solder connections	Screw terminals
	6...8 mm	6...8 mm	5...8 mm
	30 VDC / 30 VAC	30 VDC / 30 VAC	250 VDC / 250 VAC
	1.0 A	1.0 A	4.0 A
	IP67	IP67	IP67
	-25...85 °C	-25...85 °C	-25...85 °C
	cURus, EAC	cURus, EAC	cURus, EAC
	Page 251	Page 251	Page 252

	BCC0714 BCC M475-0000-2B-000-01X575-000	
Connection	M12x1-Male, straight, 5-pole, B-coded	
Number of connectable contacts	5	
Connection cross-section	0.14...0.75 mm²	
Type of wire mounting	Screw terminals	
Cable diameter D	5...8 mm	
Operating voltage Ub	250 VDC / 250 VAC	
Rated current (40 °C)	4.0 A	
Protection degree	IP67	
Ambient temperature	-25...85 °C	
Approval/Conformity	cURus, EAC	
Productview	Page 252	

	BCC0717 BCC M485-0000-1B-000-01X575-000	BCC0716 BCC M485-0000-2B-000-01X575-000	BCC03Y1 BCC M474-0000-1D-000-51X475-000
	M12x1-Female, angled, 5-pole, B-coded	M12x1-Male, angled, 5-pole, B-coded	M12x1-Female, straight, 4-pole, D-coded
	5	5	4
	0.14...0.75 mm²	0.14...0.75 mm²	0.14...0.75 mm²
	Screw terminals	Screw terminals	Screw terminals
	5...8 mm	5...8 mm	5...8 mm
	250 VDC / 250 VAC	250 VDC / 250 VAC	250 VDC / 250 VAC
	4.0 A	4.0 A	4.0 A
	IP67	IP67	IP67
	-25...85 °C	-25...85 °C	-25...85 °C
	cURus, EAC	cURus, EAC	cURus, EAC
	Page 252	Page 252	Page 252

	BCC03WZ BCC M474-0000-2D-000-51X475-000	
Connection	M12x1-Male, straight, 4-pole, D-coded	
Number of connectable contacts	4	
Connection cross-section	0.14...0.75 mm²	
Type of wire mounting	Screw terminals	
Cable diameter D	5...8 mm	
Operating voltage Ub	250 VDC / 250 VAC	
Rated current (40 °C)	4.0 A	
Protection degree	IP67	
Ambient temperature	-25...85 °C	
Approval/Conformity	cURus, EAC	
Productview	Page 252	

	BCC03Y2 BCC M484-0000-1D-000-51X475-000	BCC03Y0 BCC M484-0000-2D-000-51X475-000	BCC0HTL BCC M478-0000-2X-000-E3X8T2-000
	M12x1-Female, angled, 4-pole, D-coded	M12x1-Male, angled, 4-pole, D-coded	M12x1-Male, straight, 8-pole, X-coded
	4	4	8
	0.14...0.75 mm²	0.14...0.75 mm²	0.14...0.34 mm²
	Screw terminals	Screw terminals	Insulation displacement connector technology
	5...8 mm	5...8 mm	5.5...9 mm
	250 VDC / 250 VAC	250 VDC / 250 VAC	60 VDC / 50 VAC
	4.0 A	4.0 A	0.5 A
	IP67	IP67	IP67
	-25...85 °C	-25...85 °C	-40...85 °C
	cURus, EAC	cURus, EAC	cULus, EAC
	Page 252	Page 252	Page 252

	BCC00TT BKS-S 32M-00	
Connection	M16x0.75-Female, straight, 8-pole	
Number of connectable contacts	8	
Connection cross-section	0.14...0.75 mm²	
Type of wire mounting	Solder connections	
Cable diameter D	6...8 mm	
Operating voltage Ub	60 VDC / 60 VAC	
Rated current (40 °C)	5.0 A	
Protection degree	IP67	
Ambient temperature	-40...95 °C	
Approval/Conformity	EAC	
Productview	Page 253	

	BCC00UP BKS-S 33M-00	BCC06FH BCC E834-0000-20-000-53X4T2-000	
	M16x0.75-Female, angled, 8-pole	RJ45-Male, straight, 4-pole	
	8	4	
	0.14...0.75 mm²	0.2...0.34 mm²	
	Solder connections	Insulation displacement connector technology	
	6...8 mm	6.1...6.9 mm	
	60 VDC / 60 VAC	125 VDC / 125 VAC	
	5.0 A	1.0 A	
	IP67	IP20	
	-40...95 °C	-40...70 °C	
	EAC	cURus, EAC	
	Page 253	Page 253	

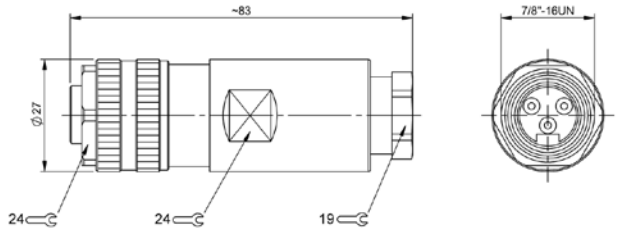

BCC0AT9

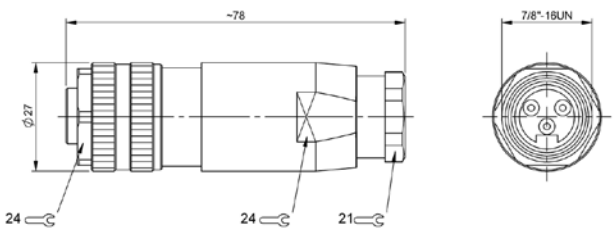

BCC0ATA

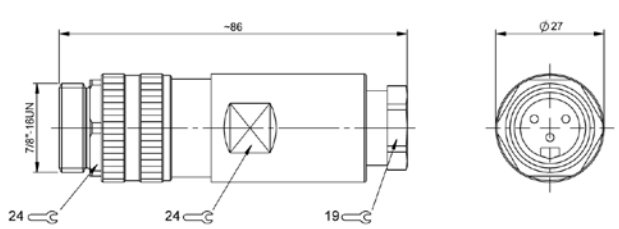

BCC0ATC

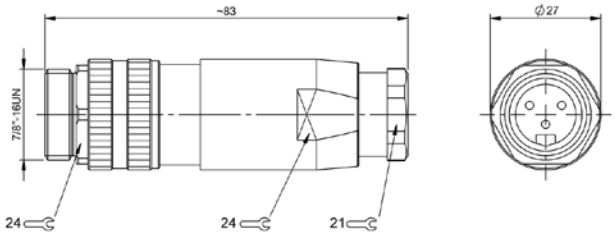

BCC0ATE

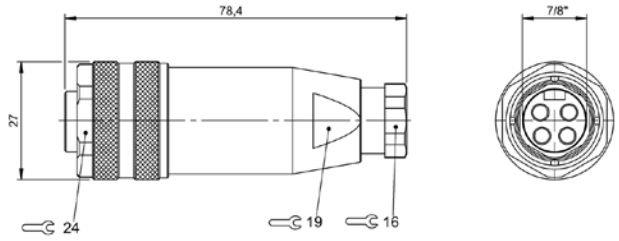

BCC0706

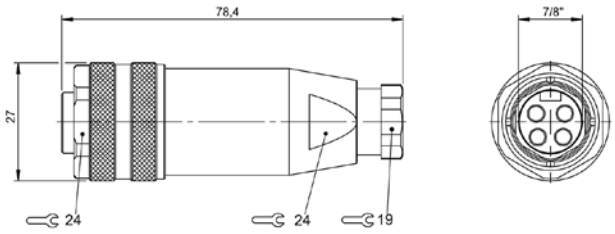

BCC0707

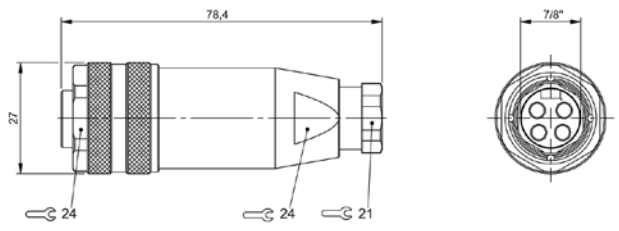

BCC0708

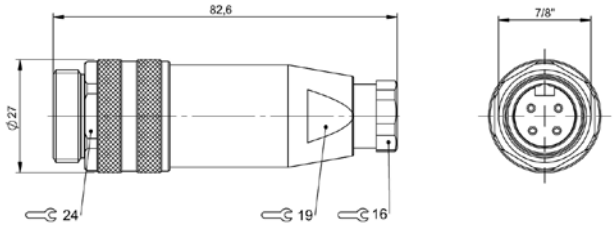

BCC0709

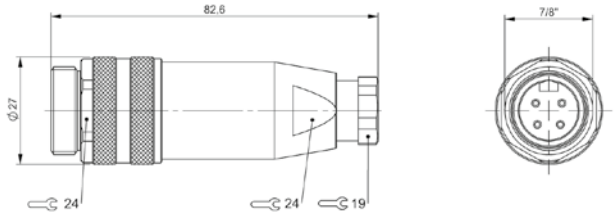

BCC070A

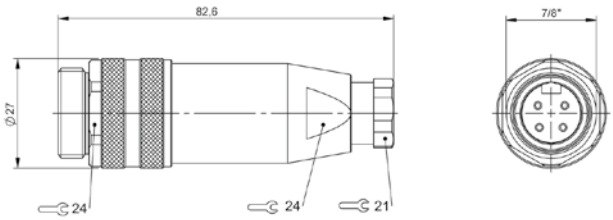

BCC070C

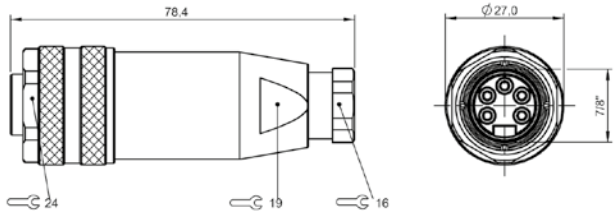

BCC070E

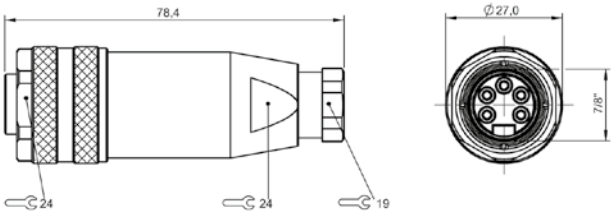

BCC070F

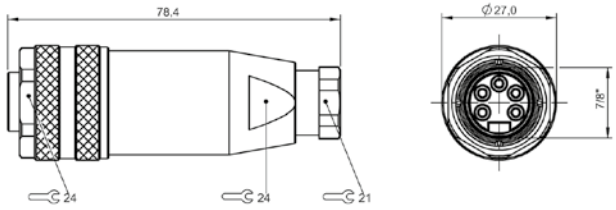

BCC070H, BCC0ATH

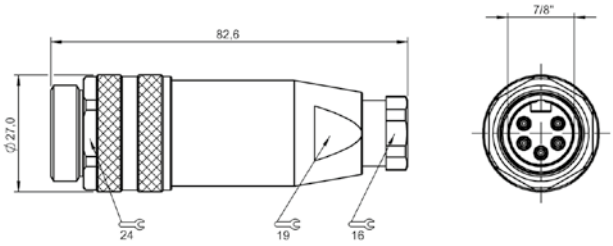

BCC070J

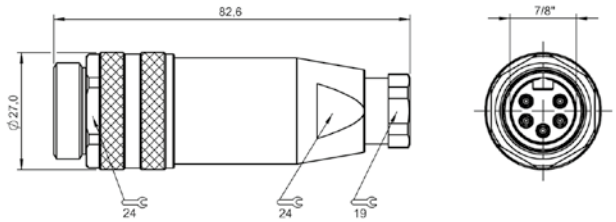

BCC070K

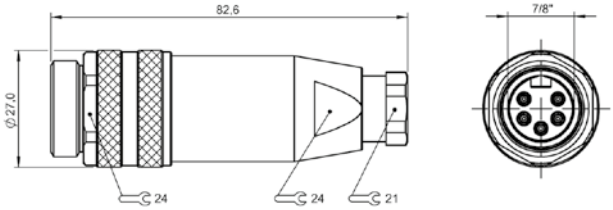

BCC070L, BCC0ATF

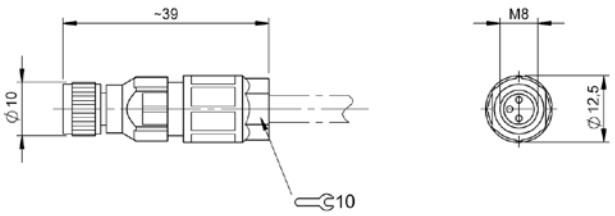

BCC0HLN

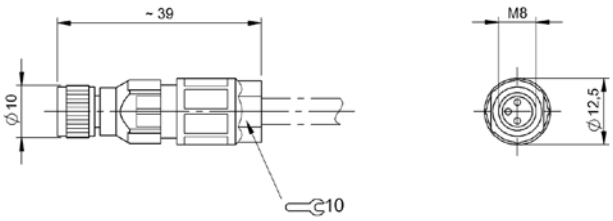

BCC0HLU

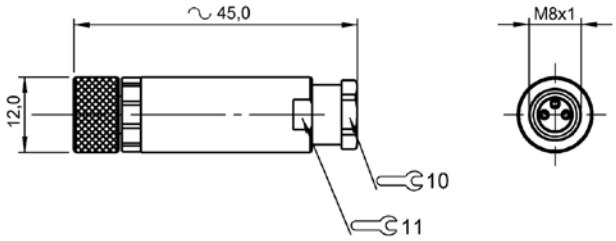

BCC06Z1

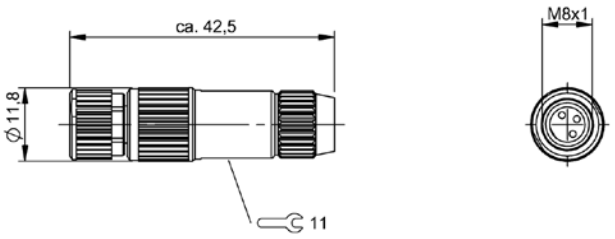

BCC02HC, BCC02HF

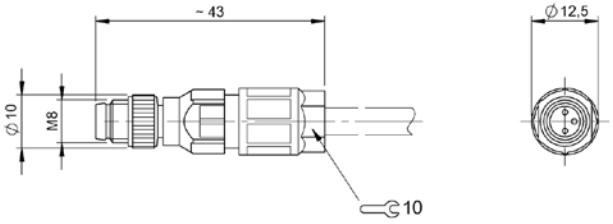

BCC0HLP

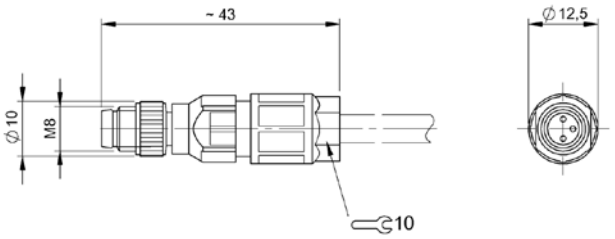

BCC0HLW

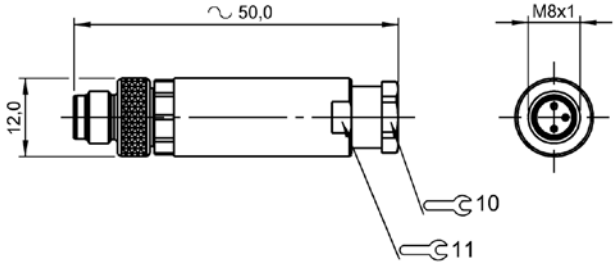

BCC0E7N

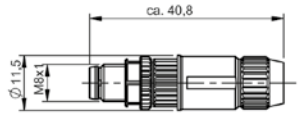

BCC02HE, BCC02HH

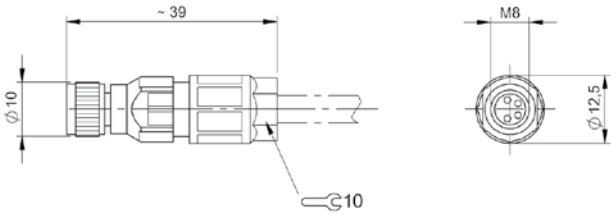

BCC0HLR

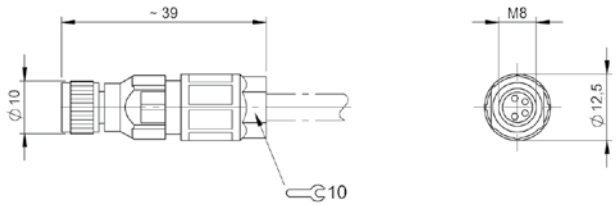

BCC0HLY

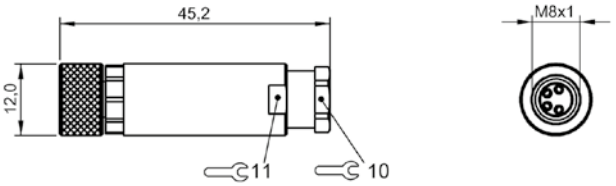

BCC06Z5

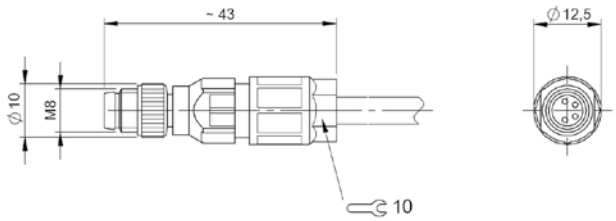

BCC0HLT

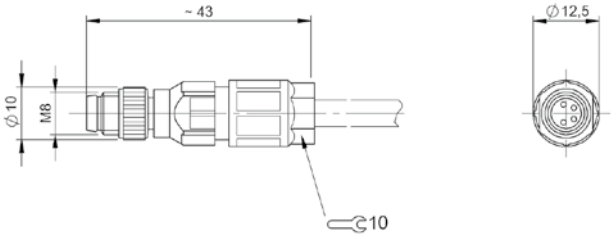

BCC0HLZ

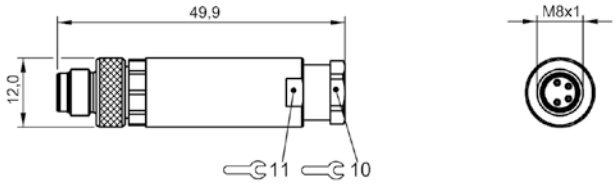

BCC06Z7

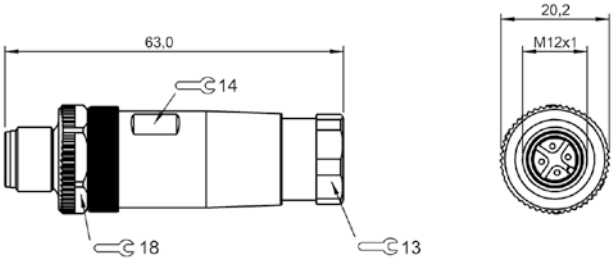

BCC06M4

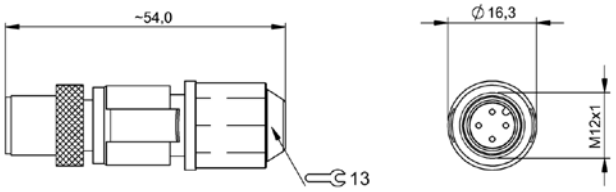

BCC08C0

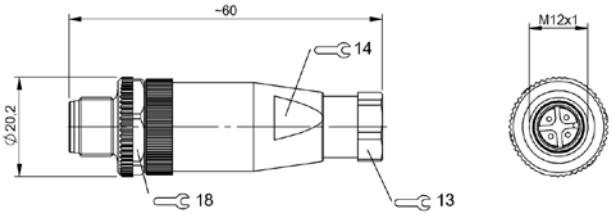

BCC0F9M

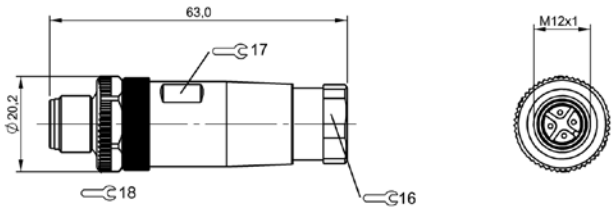

BCC06F7, BCC06Y5

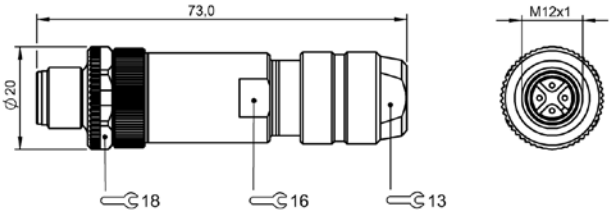

BCC0869

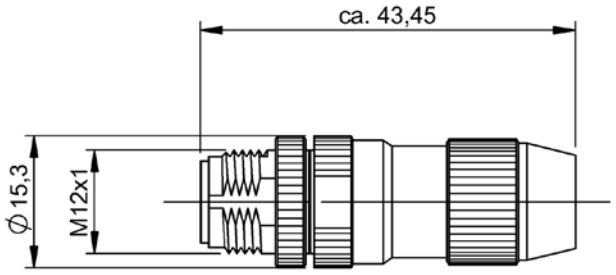

BCC02H9

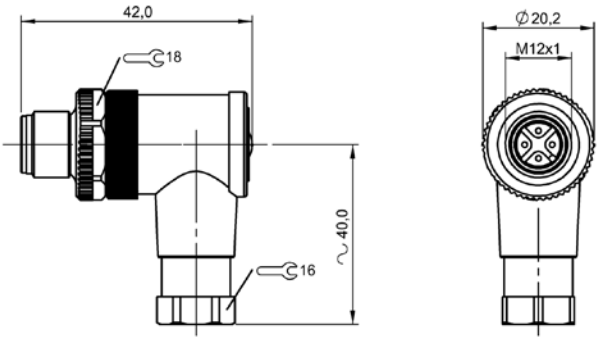

BCC06ZC, BCC06ZE

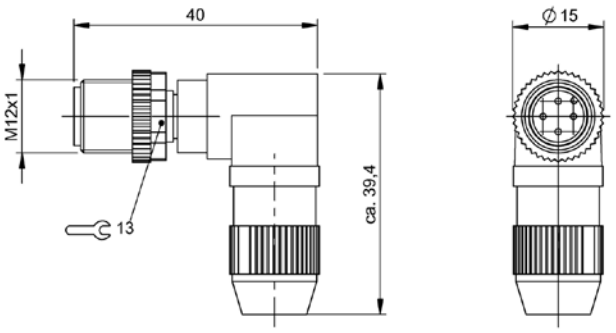

BCC02H7

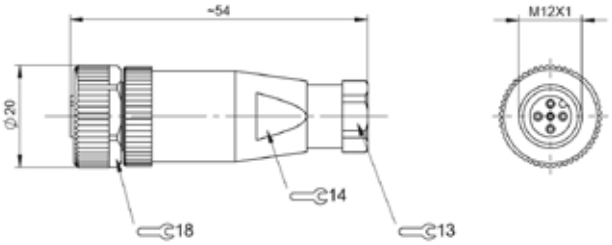

BCC06Z9, BCC06ZF, BCC0F9N

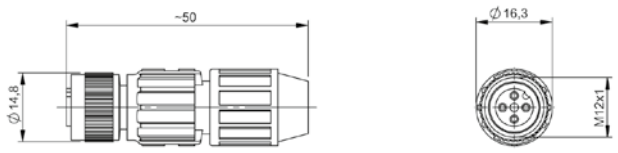

BCC06ZY

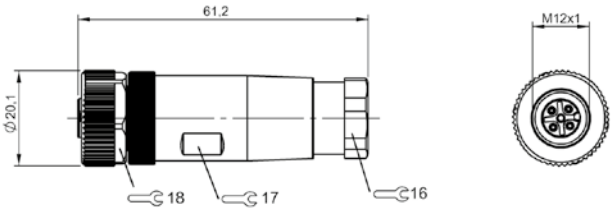

BCC06F6, BCC06W9, BCC06Y6

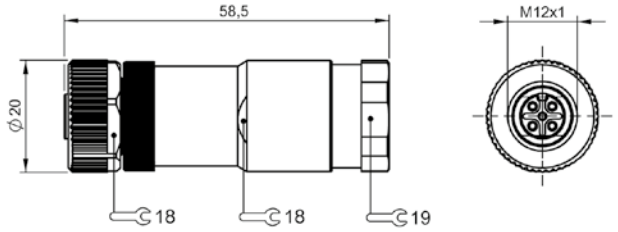

BCC09JP

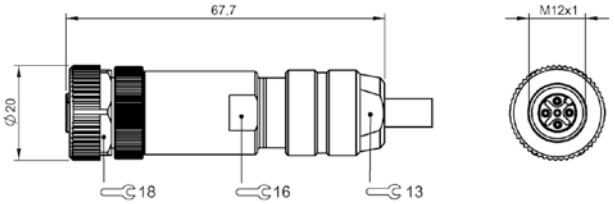

BCC06ZM, BCC06ZN

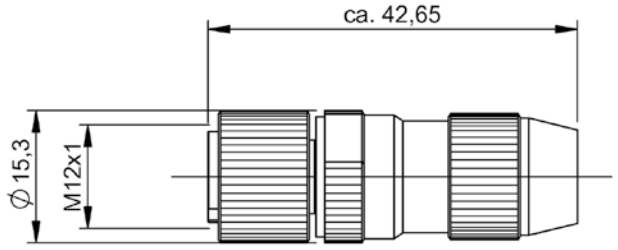

BCC02H8

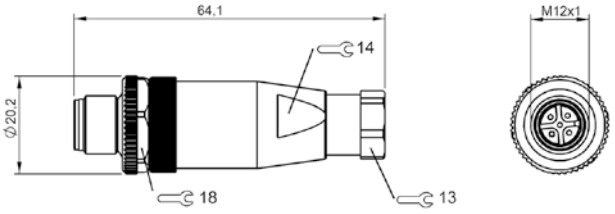

BCC06YA

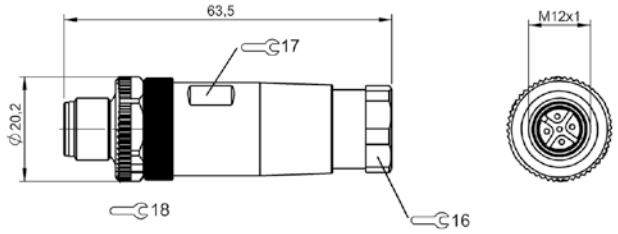

BCC06EY

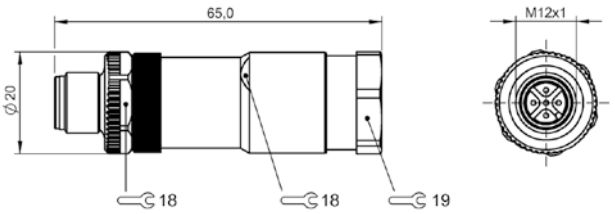

BCC09JW

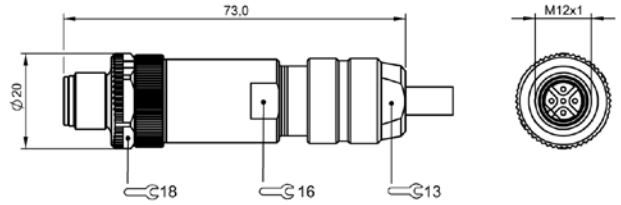

BCC086A

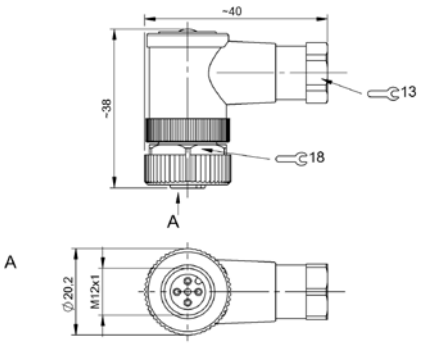

BCC06ZA

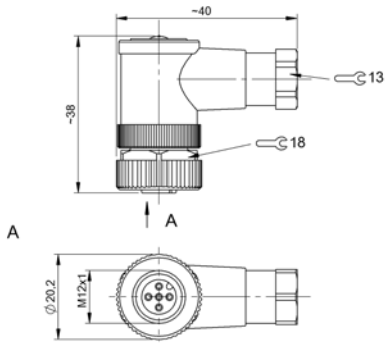

BCC06ZH

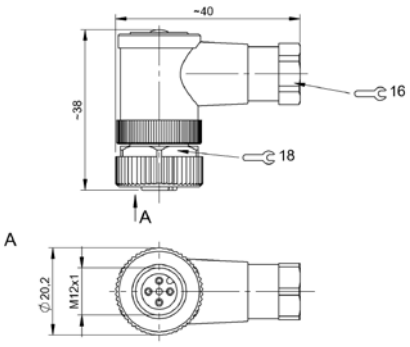

BCC06Y8

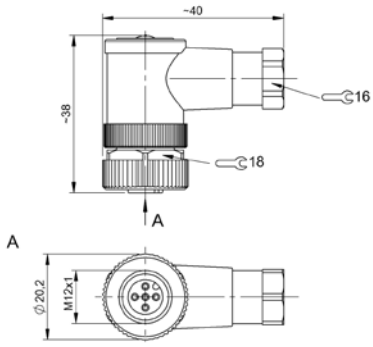

BCC06ZJ

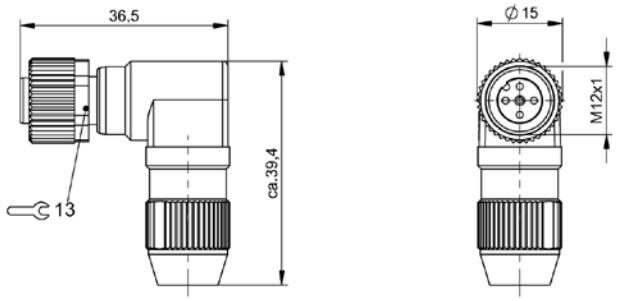

BCC02H6

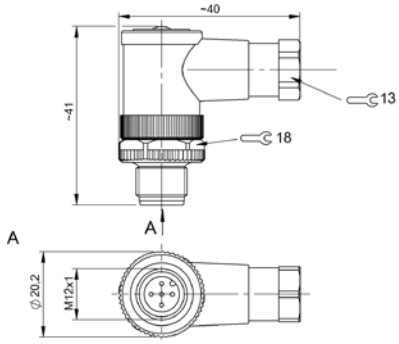

BCC06ZK

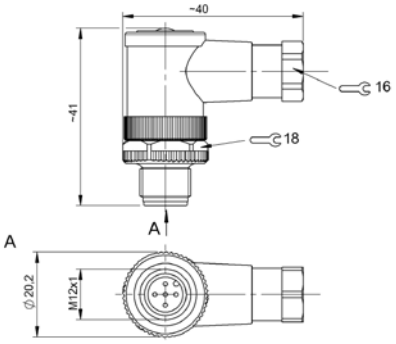

BCC06ZL

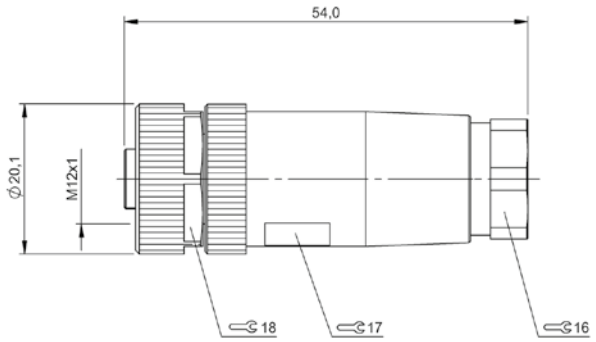

BCC0A03

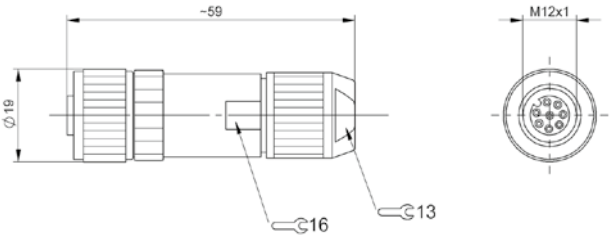

BCC04MC

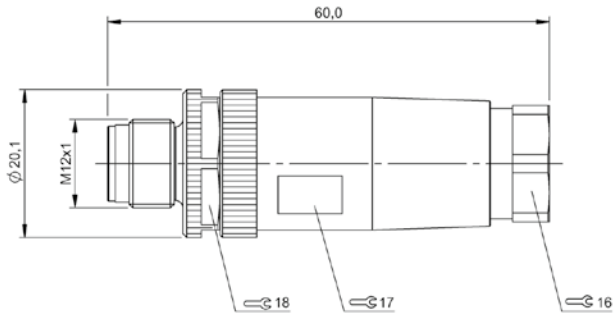

BCC0A04

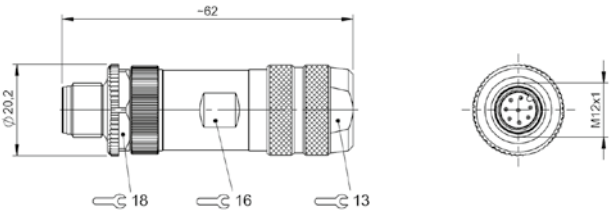

BCC0HAH

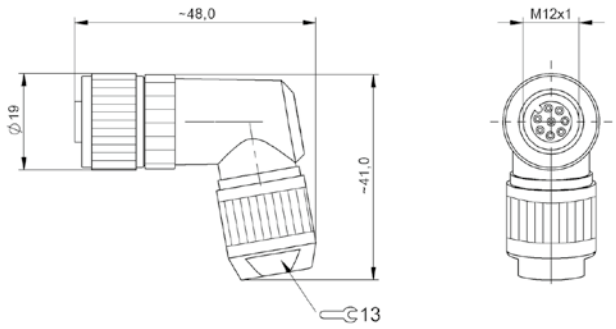

BCC04ME

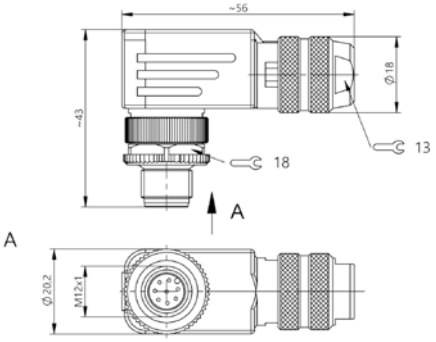

BCC0KR4

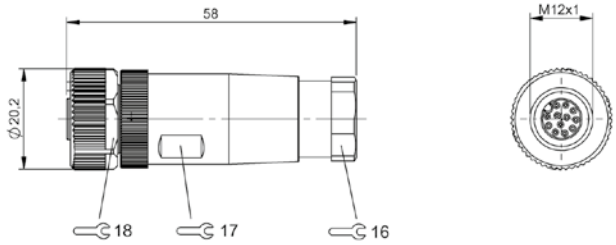

BCC0A05

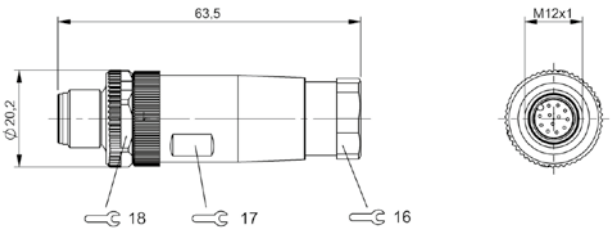

BCC0A06

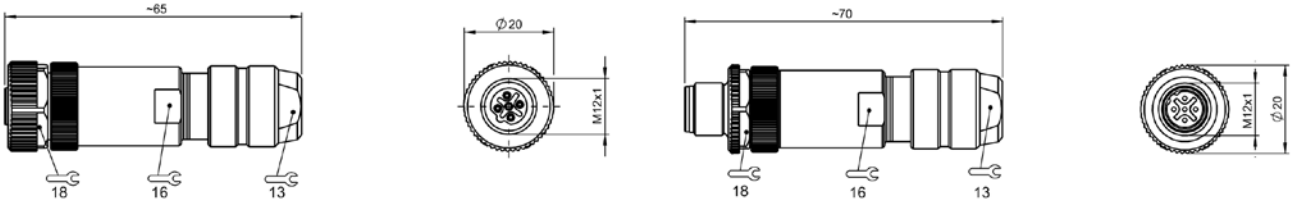

BCC0715

BCC0714

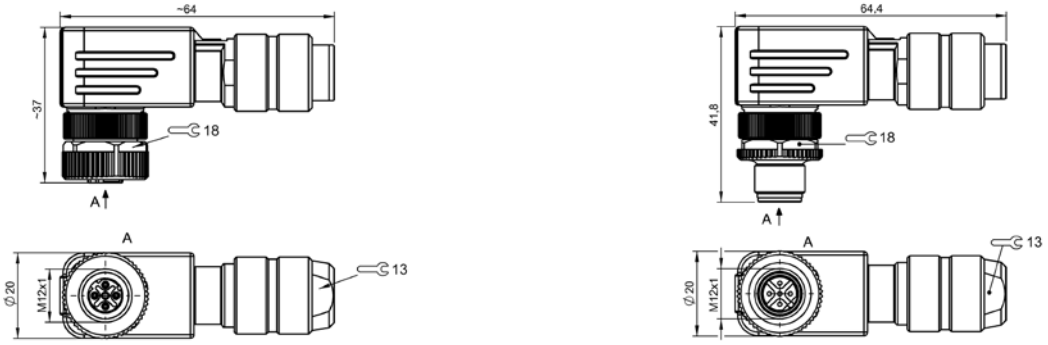

BCC0717, BCC03Y2

BCC0716

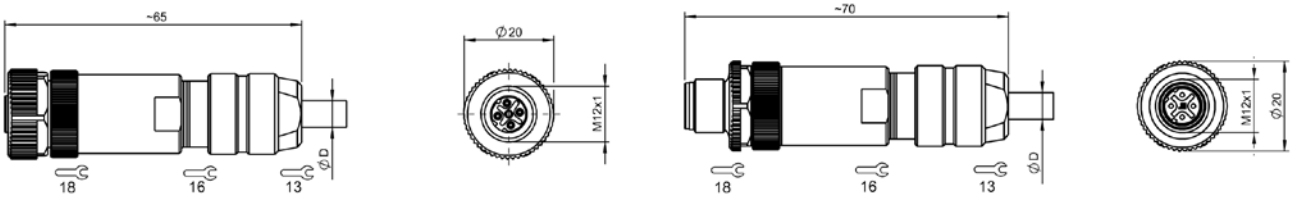

BCC03Y1

BCC03WZ

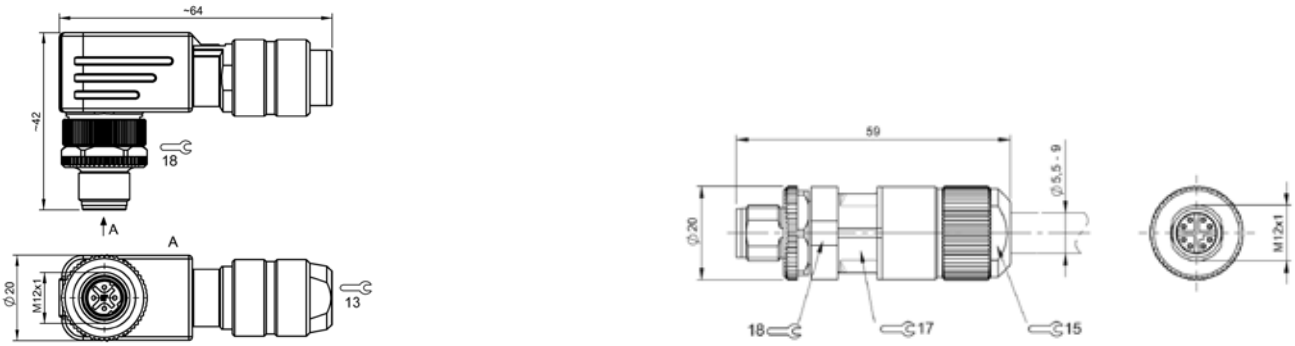

BCC03Y0

BCC0HTL

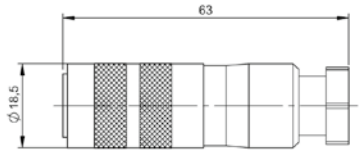

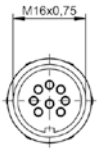

BCC00TT

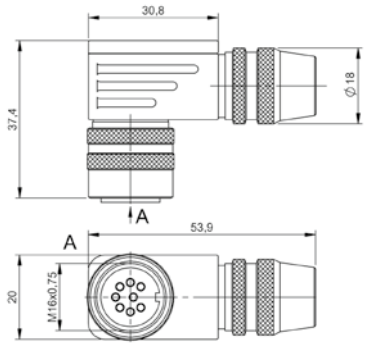

BCC00UP

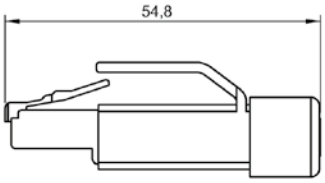

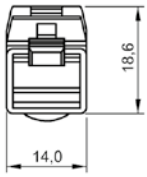

BCC06FH

Rugged for optimized connecting

BULKHEADS

We offer you an extensive product range of bulkheads. Our plug connectors RJ45 and M12 (A-, B- and D-coded) in various designs are exceptionally robust, resistant to shock and vibration.

High dust and water protection and high-quality materials distinguish connectors from Balluff. They ensure a reliable and rapid connection through the control cabinet wall or other housings.

The most important benefits

- High dust and water protection
- Extensive product range with various designs
- For reliable, fast connecting
- Robust and industrial grade
- High-quality materials

	BCC0A7M BCC A353-A353-30-RN036-000	BCC0723 BCC A354-A354-30-RN011-000	
Connection 1	7/8“-Female, straight, 3-pole	7/8“-Female, straight, 4-pole	
Connection 2	7/8“-16 UN2A-Male, straight, 3-pole	7/8“-16 UN2A-Male, straight, 4-pole	
Mounting	7/8“-16UN2A	7/8“-16UN2A	
Operating voltage Ub	600 VDC / 600 VAC	600 VDC / 600 VAC	
Rated current (40 °C)	13.0 A	10.0 A	
Protection degree	IP67	IP67	
Ambient temperature	-40...105 °C	-40...105 °C	
Approval/Conformity	cULus, EAC	cULus, EAC	
Productview	Page 260	Page 260	

	BCC0A7N BCC A355-A355-30-RN037-000	BCC06YP BCC M454-M454-5D-RM002-000	BCC085F BCC M414-E814-BG-RM013-000	BCC085H BCC M424-E814-BG-RM013-000
	7/8“-Female, straight, 5-pole	M12x1-Female, straight, 4-pole, D-coded	M12x1-Female, straight, 4-pole, D-coded	M12x1-Female, angled, 4-pole, D-coded
	7/8“-16 UN2A-Male, straight, 5-pole	M12x1-Female, straight, 4-pole, D-coded	RJ45-Female, straight, 4-pole	RJ45-Female, straight, 4-pole
	7/8“-16UN2A	M16x1.5	M16x1.5	M16x1.5
	600 VDC / 600 VAC	60 VDC / 60 VAC	60 VDC / 60 VAC	60 VDC / 60 VAC
	8.0 A	4.0 A	0.5 A	0.5 A
	IP67	IP67/IP67	IP20	IP20
	-40...105 °C	-25...80 °C	-20...80 °C	-20...80 °C
	cULus, EAC	EAC	EAC	EAC
	Page 260	Page 260	Page 260	Page 260

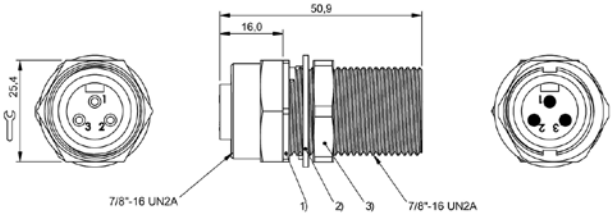

1) Locknut, 2) Washer, 3) O-ring

BCC0A7M

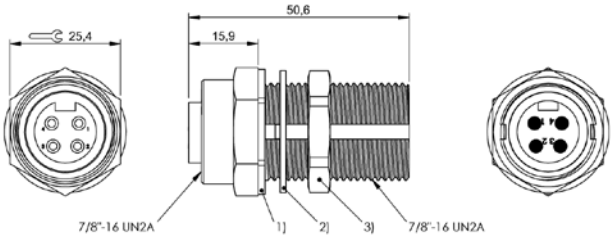

BCC0723

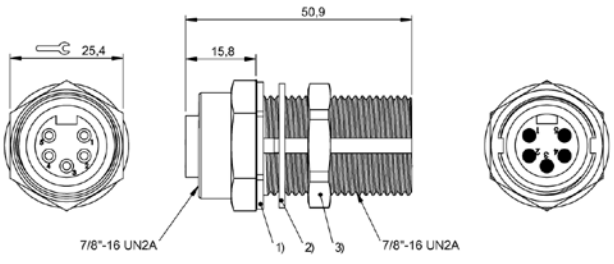

1) Locknut, 2) Washer, 3) O-ring

BCC0A7N

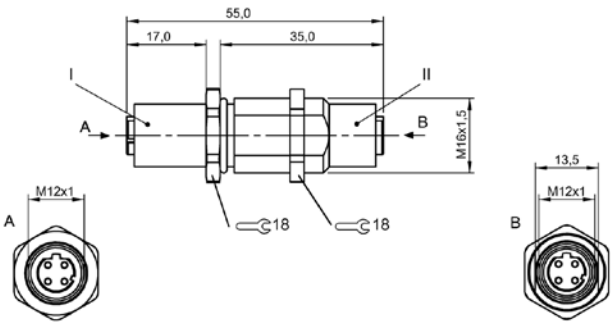

BCC06YP

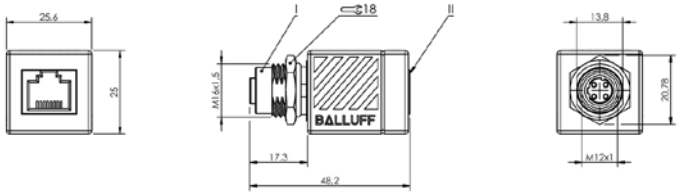

BCC085F

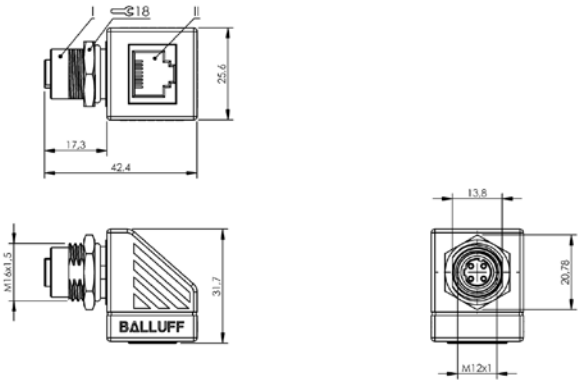

BCC085H

Rugged for secure connections

RECEPTACLES

With Balluff you can select from a wide, flexibly applicable product range of receptacles in M8 and M12 sizes. You can get the connectors in 3-, 4-, 5-, 8- and 12-pin versions. All connectors are made of rugged metal, comply with IP67 and are resistant to shock and vibration.

The most important benefits

- With socket and plug
- Robust metal designs
- Resistant to shocks and vibration
- High-quality materials
- Protection class IP67
- Different strand lengths available
- Wide range of products
- Flexible in application

	BCC0E63 BCC A354-0000-10-RN010-006	BCC0720 BCC A354-0000-10-RN010-020	BCC098M BCC A355-0000-10-RN022-006	
Connection	7/8“-Female, straight, 4-pole	7/8“-Female, straight, 4-pole	7/8“-Female, straight, 5-pole	
Number of conductors	4	4	5	
Conductor cross-section	16 AWG	16 AWG	16 AWG	
Lead length L	0.60 m	2.00 m	0.60 m	
Operating voltage Ub	600 VDC / 600 VAC	600 VDC / 600 VAC	600 VDC / 600 VAC	
Rated current (40 °C)	10.0 A	10.0 A	8.0 A	
Protection degree	IP67	IP67	IP67	
Cable temperature, fixed routing	-40...105 °C	-40...105 °C	-40...105 °C	
Approval/Conformity	cULus, EAC	cULus, EAC	cULus, EAC	
Productview	Page 278	Page 278	Page 278	

	BCC098N BCC A355-0000-10-RN022-020	BCC0CU2 BCC A353-0000-10-RN057-006	BCC0CU3 BCC A353-0000-10-RN057-020	BCC0CU6 BCC A354-0000-10-RN059-006	BCC0CU7 BCC A354-0000-10-RN059-020
	7/8“-Female, straight, 5-pole	7/8“-Female, straight, 3-pole	7/8“-Female, straight, 3-pole	7/8“-Female, straight, 4-pole	7/8“-Female, straight, 4-pole
	5	3	3	4	4
	16 AWG	16 AWG	16 AWG	16 AWG	16 AWG
	2.00 m	0.60 m	2.00 m	0.60 m	2.00 m
	600 VDC / 600 VAC	600 VDC / 600 VAC	600 VDC / 600 VAC	600 VDC / 600 VAC	600 VDC / 600 VAC
	8.0 A	13.0 A	13.0 A	10.0 A	10.0 A
	IP67	IP67	IP67	IP67	IP67
	-40...105 °C	-40...105 °C	-40...105 °C	-40...105 °C	-40...105 °C
	cULus, EAC	cULus, EAC	cULus, EAC	cULus, EAC	cULus, EAC
	Page 278	Page 278	Page 278	Page 278	Page 278

	BCC0E64 BCC A354-0000-20-RN010-006	BCC0722 BCC A354-0000-20-RN010-020	BCC098P BCC A355-0000-20-RN022-006	
Connection	7/8“-Male, straight, 4-pole	7/8“-Male, straight, 4-pole	7/8“-Male, straight, 5-pole	
Number of conductors	4	4	5	
Conductor cross-section	16 AWG	16 AWG	16 AWG	
Lead length L	0.60 m	2.00 m	0.60 m	
Operating voltage Ub	600 VDC / 600 VAC	600 VDC / 600 VAC	600 VDC / 600 VAC	
Rated current (40 °C)	10.0 A	10.0 A	8.0 A	
Protection degree	IP67	IP67	IP67	
Cable temperature, fixed routing	-40...105 °C	-40...105 °C	-40...105 °C	
Approval/Conformity	cULus, EAC	cULus, EAC	cULus, EAC	
Productview	Page 278	Page 278	Page 278	

	BCC098R BCC A355-0000-20-RN022-020	BCC0CU4 BCC A353-0000-20-RN057-006	BCC0CU5 BCC A353-0000-20-RN057-020	BCC0CU9 BCC A354-0000-20-RN059-006	BCC0CUA BCC A354-0000-20-RN059-020
	7/8“-Male, straight, 5-pole	7/8“-Male, straight, 3-pole	7/8“-Male, straight, 3-pole	7/8“-Male, straight, 4-pole	7/8“-Male, straight, 4-pole
	5	3	3	4	4
	16 AWG	16 AWG	16 AWG	16 AWG	16 AWG
	2.00 m	0.60 m	2.00 m	0.60 m	2.00 m
	600 VDC / 600 VAC	600 VDC / 600 VAC	600 VDC / 600 VAC	600 VDC / 600 VAC	600 VDC / 600 VAC
	8.0 A	13.0 A	13.0 A	10.0 A	10.0 A
	IP67	IP67	IP67	IP67	IP67
	-40...105 °C	-40...105 °C	-40...105 °C	-40...105 °C	-40...105 °C
	cULus, EAC	cULus, EAC	cULus, EAC	cULus, EAC	cULus, EAC
	Page 278	Page 278	Page 278	Page 278	Page 278

	BCC0E4Y BCC M353-0000-10-RM049-005	BCC0E4Z BCC M353-0000-10-RM049-020	BCC0E35 BCC M354-0000-10-RM050-005	
Connection	M8x1-Female, straight, 3-pole, A-coded	M8x1-Female, straight, 3-pole, A-coded	M8x1-Female, straight, 4-pole, A-coded	
Number of conductors	3	3	4	
Conductor cross-section	0.25 mm²	0.25 mm²	0.25 mm²	
Lead length L	0.50 m	2.00 m	0.50 m	
Operating voltage Ub	60 VDC / 60 VAC	60 VDC / 60 VAC	30 VDC / 30 VAC	
Rated current (40 °C)	4.0 A	4.0 A	4.0 A	
Protection degree	IP67	IP67	IP67	
Cable temperature, fixed routing	-25...85 °C	-25...85 °C	-25...85 °C	
Approval/Conformity	EAC	EAC	EAC	
Productview	Page 279	Page 279	Page 279	

	BCC0E38 BCC M354-0000-10-RM050-020	BCC0E50 BCC M353-0000-20-RM049-005	BCC0E51 BCC M353-0000-20-RM049-020	BCC0E2Z BCC M354-0000-20-RM050-005	BCC0E32 BCC M354-0000-20-RM050-020
	M8x1-Female, straight, 4-pole, A-coded	M8x1-Male, straight, 3-pole, A-coded	M8x1-Male, straight, 3-pole, A-coded	M8x1-Male, straight, 4-pole, A-coded	M8x1-Male, straight, 4-pole, A-coded
	4	3	3	4	4
	0.25 mm²	0.25 mm²	0.25 mm²	0.25 mm²	0.25 mm²
	2.00 m	0.50 m	2.00 m	0.50 m	2.00 m
	30 VDC / 30 VAC	60 VDC / 60 VAC	60 VDC / 60 VAC	30 VDC / 30 VAC	30 VDC / 30 VAC
	4.0 A	4.0 A	4.0 A	4.0 A	4.0 A
	IP67	IP67	IP67	IP67	IP67
	-25...85 °C	-25...85 °C	-25...85 °C	-25...85 °C	-25...85 °C
	EAC	EAC	EAC	EAC	EAC
	Page 279	Page 279	Page 279	Page 279	Page 279

	BCC09JZ BCC M455-0000-1A-RM014-005	BCC0E54 BCC M455-0000-1A-RM014-020	BCC099C BCC M455-0000-1A-RM020-005	
Connection	M12x1-Female, straight, 5-pole, A-coded	M12x1-Female, straight, 5-pole, A-coded	M12x1-Female, straight, 4-pole, A-coded	
Number of conductors	5	5	4	
Conductor cross-section	0.25 mm²	0.25 mm²	0.25 mm²	
Lead length L	0.50 m	2.00 m	0.50 m	
Operating voltage Ub	125 VDC / 125 VAC	125 VDC / 125 VAC	250 VDC / 250 VAC	
Rated current (40 °C)	4.0 A	4.0 A	4.0 A	
Protection degree	IP68	IP68	IP68	
Cable temperature, fixed routing	-25...85 °C	-25...85 °C	-25...85 °C	
Approval/Conformity	EAC	EAC	EAC	
Productview	Page 279	Page 279	Page 279	

	BCC0CAE BCC M455-0000-1A-RM020-020	BCC0E55 BCC M458-0000-1A-RM015-005	BCC0E56 BCC M458-0000-1A-RM015-020	BCC0E59 BCC M45C-0000-1A-RM081-005	BCC0E5A BCC M45C-0000-1A-RM081-020
	M12x1-Female, straight, 4-pole, A-coded	M12x1-Female, straight, 8-pole, A-coded	M12x1-Female, straight, 8-pole, A-coded	M12x1-Female, straight, 12-pole, A-coded	M12x1-Female, straight, 12-pole, A-coded
	4	8	8	12	12
	0.25 mm²	0.25 mm²	0.25 mm²	0.14 mm²	0.14 mm²
	2.00 m	0.50 m	2.00 m	0.50 m	2.00 m
	250 VDC / 250 VAC	60 VDC / 60 VAC	60 VDC / 60 VAC	30 VDC / 30 VAC	30 VDC / 30 VAC
	4.0 A	2.0 A	2.0 A	1.0 A	1.0 A
	IP68	IP68	IP68	IP68	IP68
	-25...85 °C	-25...85 °C	-25...85 °C	-25...85 °C	-25...85 °C
	EAC	EAC	EAC	EAC	EAC
	Page 279	Page 279	Page 279	Page 279	Page 279

	BCC0CZ0 BCC M454-0000-1A-RN060-006	BCC0CZ1 BCC M454-0000-1A-RN060-020	BCC0CZ8 BCC M455-0000-1A-RN063-006	
Connection	M12x1-Female, straight, 4-pole, A-coded	M12x1-Female, straight, 4-pole, A-coded	M12x1-Female, straight, 5-pole, A-coded	
Number of conductors	4	4	5	
Conductor cross-section	22 AWG	22 AWG	22 AWG	
Lead length L	0.60 m	2.00 m	0.60 m	
Operating voltage Ub	300 VDC / 300 VAC	300 VDC / 300 VAC	300 VDC / 300 VAC	
Rated current (40 °C)	4.0 A	4.0 A	4.0 A	
Protection degree	IP67	IP67	IP67	
Cable temperature, fixed routing	-40...105 °C	-40...105 °C	-40...105 °C	
Approval/Conformity	cULus, EAC	cULus, EAC	cULus, EAC	
Productview	Page 280	Page 280	Page 280	

	BCC0CZ9 BCC M455-0000-1A-RN063-020	**BCC0E1K** BCC M458-0000-1A-RN066-006	**BCC0E1L** BCC M458-0000-1A-RN066-020	**BCC0CWL** BCC M454-0000-1A-RN053-006	**BCC0CWM** BCC M454-0000-1A-RN053-020
	M12x1-Female, straight, 5-pole, A-coded	M12x1-Female, straight, 8-pole, A-coded	M12x1-Female, straight, 8-pole, A-coded	M12x1-Female, straight, 4-pole, A-coded	M12x1-Female, straight, 4-pole, A-coded
	5	8	8	4	4
	22 AWG	24 AWG	24 AWG	22 AWG	22 AWG
	2.00 m	0.60 m	2.00 m	0.60 m	2.00 m
	300 VDC / 300 VAC	60 VDC / 60 VAC	60 VDC / 60 VAC	300 VDC / 300 VAC	300 VDC / 300 VAC
	4.0 A	2.0 A	2.0 A	4.0 A	4.0 A
	IP67	IP67	IP67	IP67	IP67
	-40...105 °C	-40...105 °C	-40...105 °C	-40...105 °C	-40...105 °C
	cULus, EAC	cULus, EAC	cULus, EAC	cULus, EAC	cULus, EAC
	Page 280	Page 280	Page 280	Page 280	Page 280

	BCC0CZ6 BCC M455-0000-1A-RN054-006	BCC0CZ7 BCC M455-0000-1A-RN054-020	BCC0CYY BCC M458-0000-1A-RN056-006	
Connection	M12x1-Female, straight, 5-pole, A-coded	M12x1-Female, straight, 5-pole, A-coded	M12x1-Female, straight, 8-pole, A-coded	
Number of conductors	5	5	8	
Conductor cross-section	22 AWG	22 AWG	24 AWG	
Lead length L	0.60 m	2.00 m	0.60 m	
Operating voltage Ub	300 VDC / 300 VAC	300 VDC / 300 VAC	60 VDC / 60 VAC	
Rated current (40 °C)	4.0 A	4.0 A	2.0 A	
Protection degree	IP67	IP67	IP67	
Cable temperature, fixed routing	-40...105 °C	-40...105 °C	-40...105 °C	
Approval/Conformity	cULus, EAC	cULus, EAC	cULus, EAC	
Productview	Page 280	Page 280	Page 280	

	BCC0CYZ BCC M458-0000-1A-RN056-020	BCC099A BCC M454-0000-2A-RM020-005	BCC0E53 BCC M454-0000-2A-RM020-020	BCC09K0 BCC M455-0000-2A-RM014-005	BCC0E5F BCC M455-0000-2A-RM014-020
	M12x1-Female, straight, 8-pole, A-coded	M12x1-Male, straight, 4-pole, A-coded	M12x1-Male, straight, 4-pole, A-coded	M12x1-Male, straight, 5-pole, A-coded	M12x1-Male, straight, 5-pole, A-coded
	8	4	4	5	5
	24 AWG	0.25 mm²	0.25 mm²	0.25 mm²	0.25 mm²
	2.00 m	0.50 m	2.00 m	0.50 m	2.00 m
	60 VDC / 60 VAC	250 VDC / 250 VAC	250 VDC / 250 VAC	250 VDC / 250 VAC	125 VDC / 125 VAC
	2.0 A	4.0 A	4.0 A	4.0 A	4.0 A
	IP67	IP68	IP68	IP68	IP68
	-40...105 °C	-25...85 °C	-25...85 °C	-25...85 °C	-25...85 °C
	cULus, EAC	EAC	EAC	EAC	EAC
	Page 280	Page 280	Page 280	Page 281	Page 281

	BCC0E57 BCC M458-0000-2A-RM015-005	BCC0E58 BCC M458-0000-2A-RM015-020	BCC0E5C BCC M45C-0000-2A-RM081-005	
Connection	M12x1-Male, straight, 8-pole, A-coded	M12x1-Male, straight, 8-pole, A-coded	M12x1-Male, straight, 12-pole, A-coded	
Number of conductors	8	8	12	
Conductor cross-section	0.25 mm²	0.25 mm²	0.14 mm²	
Lead length L	0.50 m	2.00 m	0.50 m	
Operating voltage Ub	60 VDC / 60 VAC	60 VDC / 60 VAC	30 VDC / 30 VAC	
Rated current (40 °C)	2.0 A	2.0 A	1.0 A	
Protection degree	IP68	IP68	IP68	
Cable temperature, fixed routing	-25...85 °C	-25...85 °C	-25...85 °C	
Approval/Conformity	EAC	EAC	EAC	
Productview	Page 281	Page 281	Page 281	

	BCC0E5E BCC M45C-0000-2A-RM081-020	BCC0CZ4 BCC M454-0000-2A-RN060-006	BCC0CZ5 BCC M454-0000-2A-RN060-020	BCC0CYR BCC M455-0000-2A-RN063-006	BCC0CYT BCC M455-0000-2A-RN063-020
	M12x1-Male, straight, 12-pole, A-coded	M12x1-Male, straight, 4-pole, A-coded	M12x1-Male, straight, 4-pole, A-coded	M12x1-Male, straight, 5-pole, A-coded	M12x1-Male, straight, 5-pole, A-coded
	12	4	4	5	5
	0.14 mm²	22 AWG	22 AWG	22 AWG	22 AWG
	2.00 m	0.60 m	2.00 m	0.60 m	2.00 m
	30 VDC / 30 VAC	300 VDC / 300 VAC	300 VDC / 300 VAC	300 VDC / 300 VAC	300 VDC / 300 VAC
	1.0 A	4.0 A	4.0 A	4.0 A	4.0 A
	IP68	IP67	IP67	IP67	IP67
	-25...85 °C	-40...105 °C	-40...105 °C	-40...105 °C	-40...105 °C
	EAC	cULus, EAC	cULus, EAC	cULus, EAC	cULus, EAC
	Page 281	Page 281	Page 281	Page 281	Page 281

	BCC0E1M BCC M458-0000-2A-RN066-006	BCC0CYK BCC M458-0000-2A-RN066-020	BCC0CZ2 BCC M454-0000-2A-RN053-006	
Connection	M12x1-Male, straight, 8-pole, A-coded	M12x1-Male, straight, 8-pole, A-coded	M12x1-Male, straight, 4-pole, A-coded	
Number of conductors	8	8	4	
Conductor cross-section	24 AWG	24 AWG	22 AWG	
Lead length L	0.60 m	2.00 m	0.60 m	
Operating voltage Ub	60 VDC / 60 VAC	60 VDC / 60 VAC	300 VDC / 300 VAC	
Rated current (40 °C)	2.0 A	2.0 A	4.0 A	
Protection degree	IP67	IP67	IP67	
Cable temperature, fixed routing	-40...105 °C	-40...105 °C	-40...105 °C	
Approval/Conformity	cULus, EAC	cULus, EAC	cULus, EAC	
Productview	Page 281	Page 281	Page 281	

	BCC0CZ3 BCC M454-0000-2A-RN053-020	BCC0CYN BCC M455-0000-2A-RN054-006	BCC0CYP BCC M455-0000-2A-RN054-020	BCC0CYC BCC M458-0000-2A-RN056-006	BCC0CYE BCC M458-0000-2A-RN056-020
	M12x1-Male, straight, 4-pole, A-coded	M12x1-Male, straight, 5-pole, A-coded	M12x1-Male, straight, 5-pole, A-coded	M12x1-Male, straight, 8-pole, A-coded	M12x1-Male, straight, 8-pole, A-coded
	4	5	5	8	8
	22 AWG	22 AWG	22 AWG	24 AWG	24 AWG
	2.00 m	0.60 m	2.00 m	0.60 m	2.00 m
	300 VDC / 300 VAC	300 VDC / 300 VAC	300 VDC / 300 VAC	60 VDC / 60 VAC	60 VDC / 60 VAC
	4.0 A	4.0 A	4.0 A	2.0 A	2.0 A
	IP67	IP67	IP67	IP67	IP67
	-40...105 °C	-40...105 °C	-40...105 °C	-40...105 °C	-40...105 °C
	cULus, EAC	cULus, EAC	cULus, EAC	cULus, EAC	cULus, EAC
	Page 281	Page 282	Page 282	Page 282	Page 282

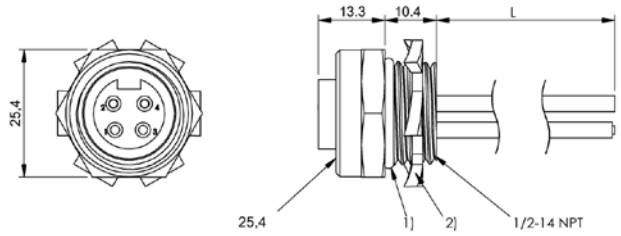

1) O-ring, 2) Lockwasher

BCC0E63, BCC0720

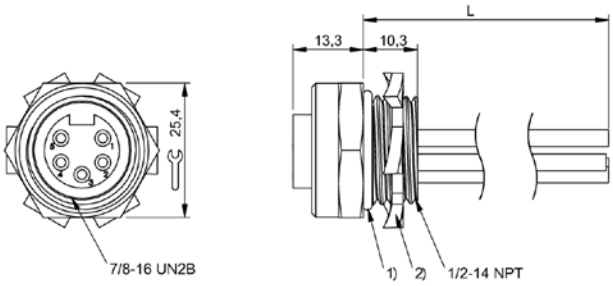

1) O-ring, 2) Locknut

BCC098M, BCC098N

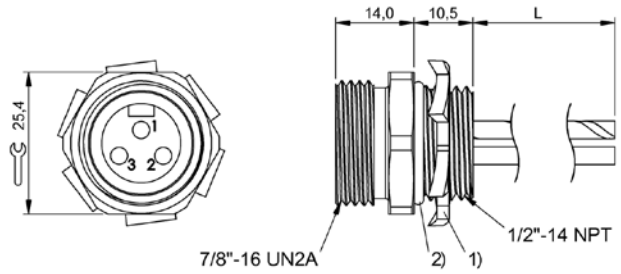

1) Hex nut, 2) O-ring

BCC0CU2, BCC0CU3

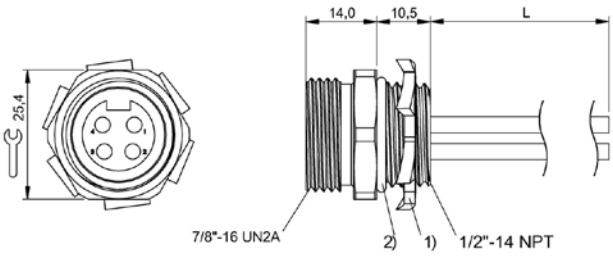

1) Hex nut, 2) O-ring

BCC0CU6, BCC0CU7

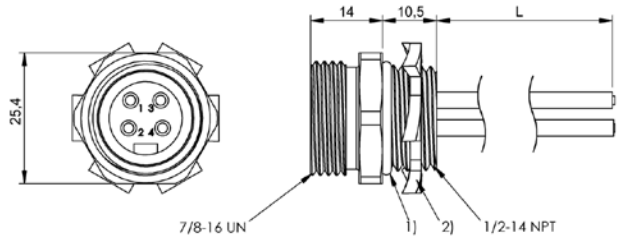

1) O-ring, 2) Lockwasher

BCC0E64, BCC0722

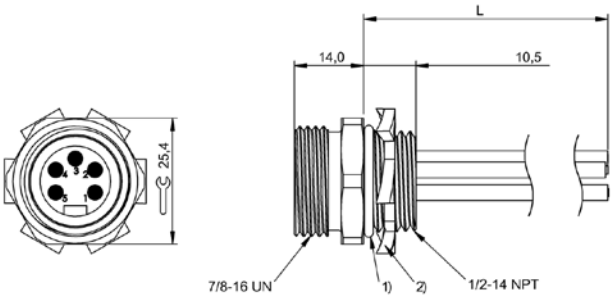

1) O-ring, 2) Locknut

BCC098P, BCC098R

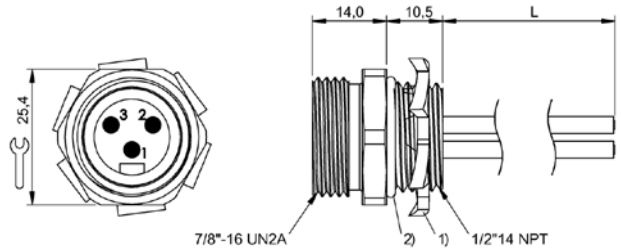

1) Hex nut, 2) O-ring

BCC0CU4, BCC0CU5

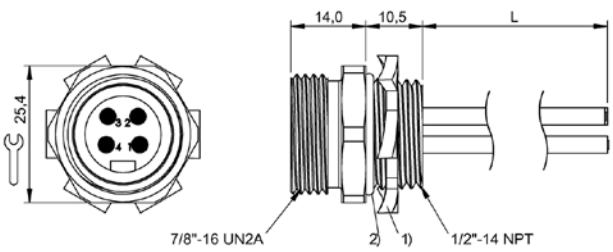

1) Hex nut, 2) O-ring

BCC0CU9, BCC0CUA

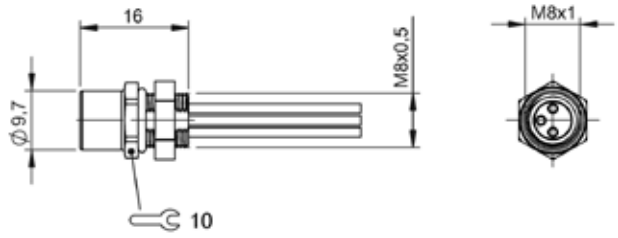

BCC0E4Y, BCC0E4Z

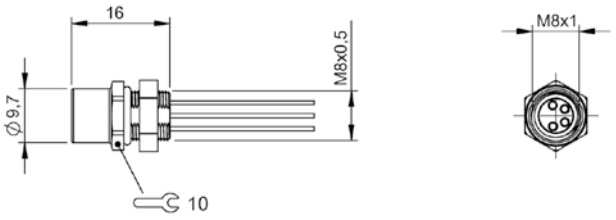

BCC0E35, BCC0E38

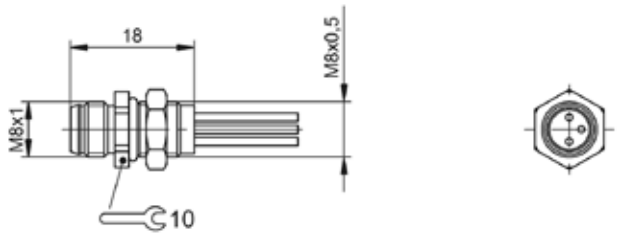

BCC0E50, BCC0E51

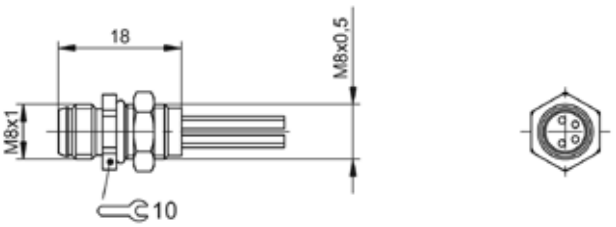

BCC0E2Z, BCC0E32

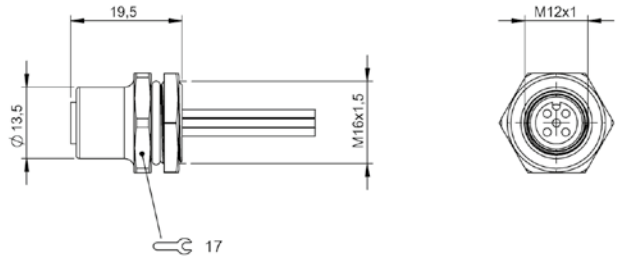

BCC09JZ, BCC0E54

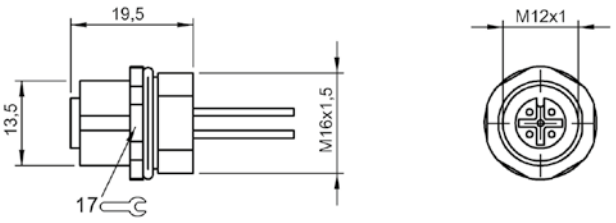

BCC099C, BCC0CAE

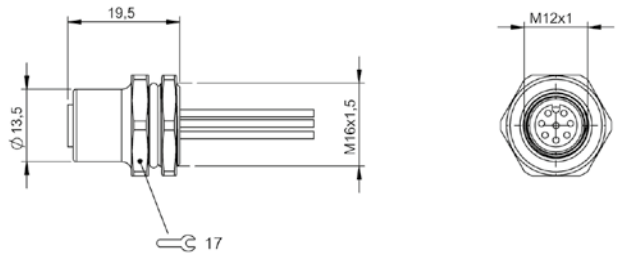

BCC0E55, BCC0E56

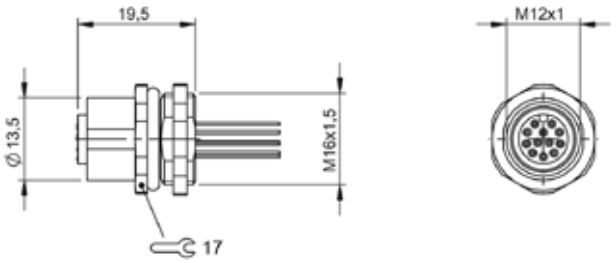

BCC0E59, BCC0E5A

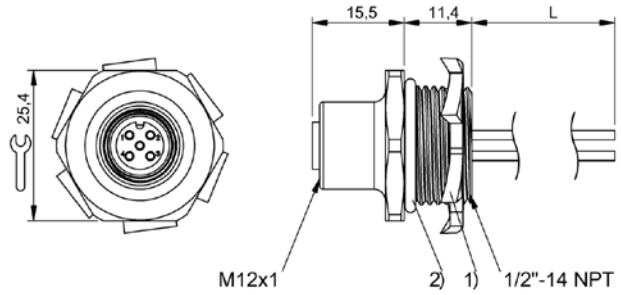

1) Hex nut, 2) O-ring

BCC0CZ0, BCC0CZ1

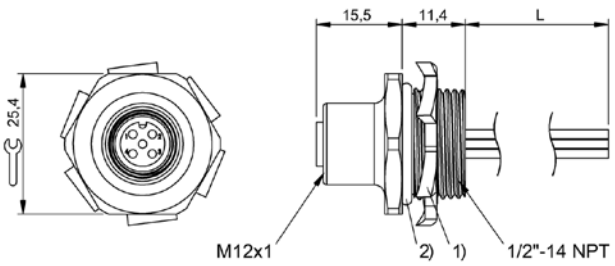

1) Hex nut, 2) O-ring

BCC0CZ8, BCC0CZ9

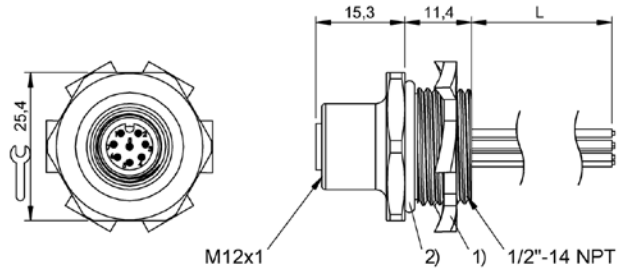

1) Hex nut, 2) O-ring

BCC0E1K, BCC0E1L

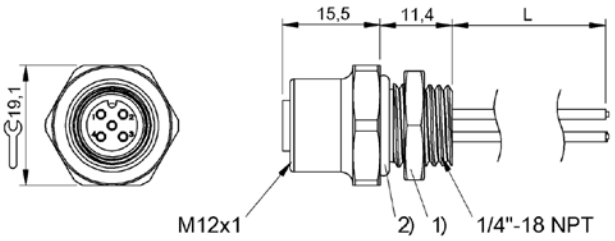

1) Hex nut, 2) O-ring

BCC0CWL, BCC0CWM

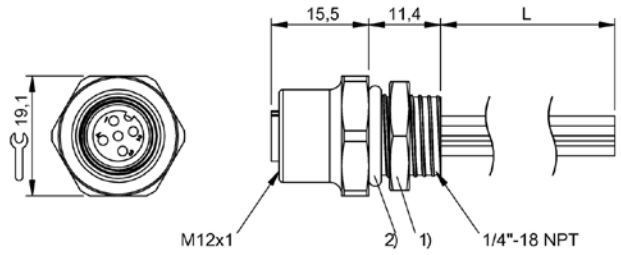

1) Hex nut, 2) O-ring

BCC0CZ6, BCC0CZ7

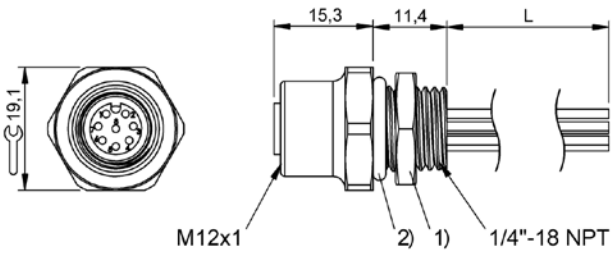

1) Hex nut, 2) O-ring

BCC0CYY, BCC0CYZ

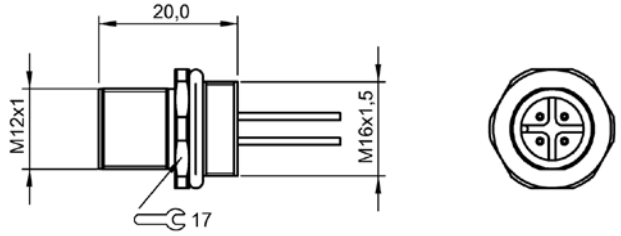

BCC099A

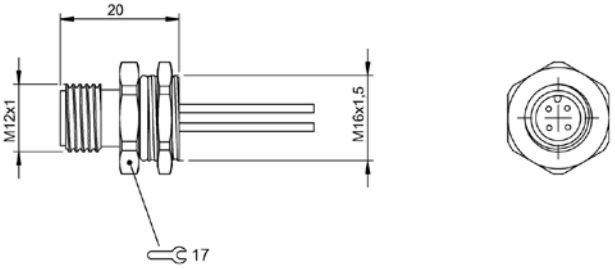

BCC0E53

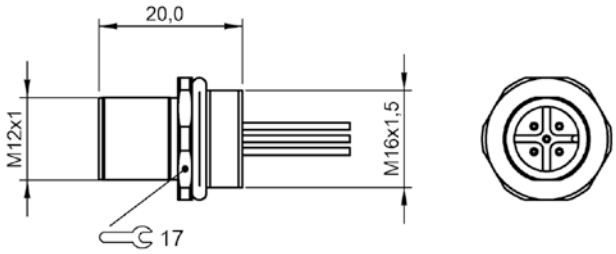

BCC09K0

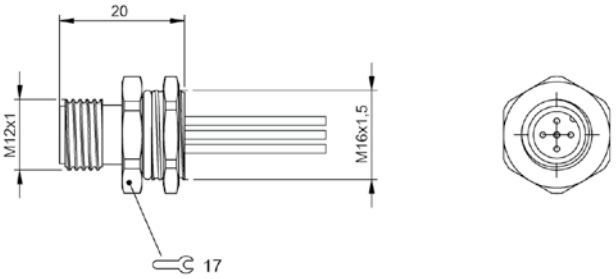

BCC0E5F

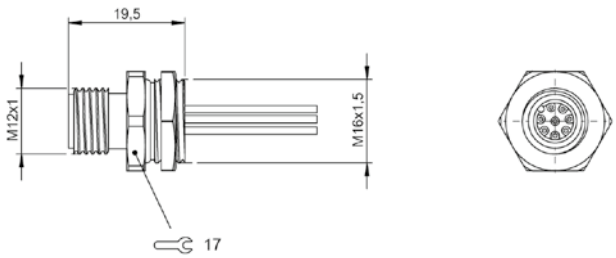

BCC0E57, BCC0E58

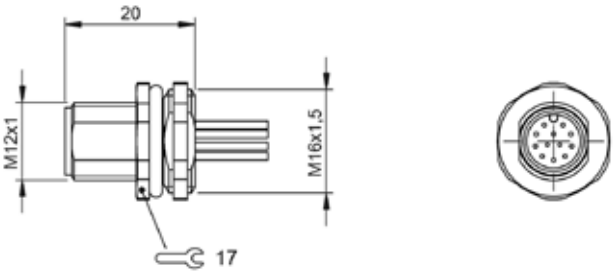

BCC0E5C, BCC0E5E

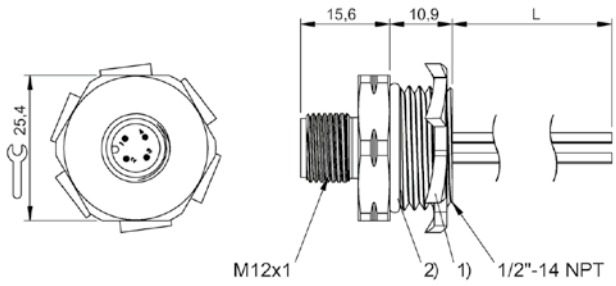

1) Hex nut, 2) O-ring

BCC0CZ4, BCC0CZ5

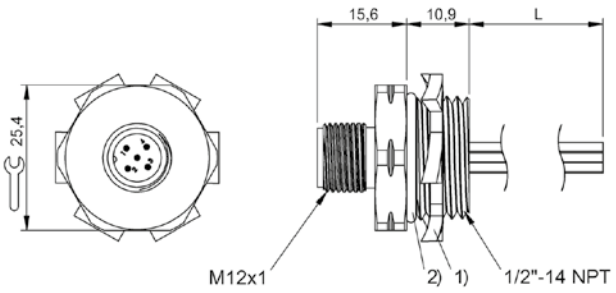

1) Hex nut, 2) O-ring

BCC0CYR, BCC0CYT

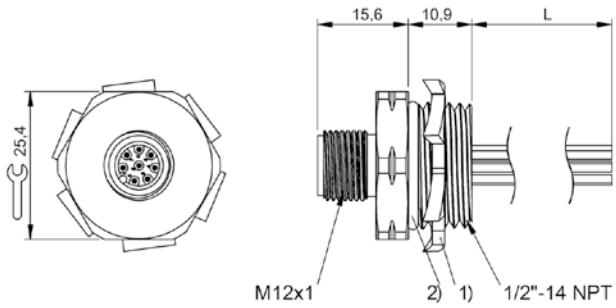

1) Hex nut, 2) O-ring

BCC0E1M, BCC0CYK

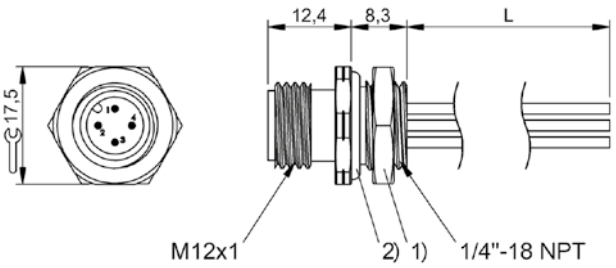

1) Hex nut, 2) O-ring

BCC0CZ2, BCC0CZ3

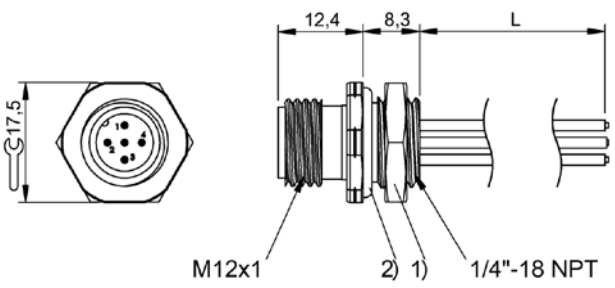

1) Hex nut, 2) O-ring

BCC0CYN, BCC0CYP

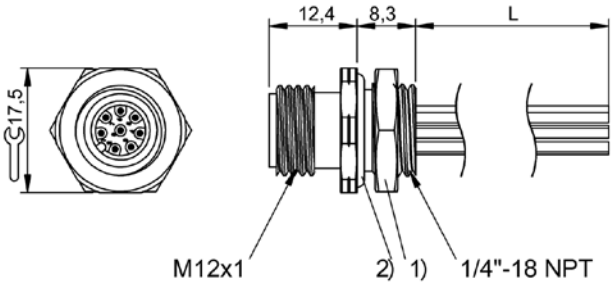

1) Hex nut, 2) O-ring

BCC0CYC, BCC0CYE

Problem solvers in installation technology

ADAPTERS

The extensive range of adapters from Balluff helps you to connect different plug connector designs quickly and reliably.
We offer many solutions, all of which are rugged and industrial grade for the highest possible level of flexibility.

The most important benefits

- Robust, industrial grade
- For reliable, fast connecting
- Additional flexibility

	BCC0HKZ BCC VA04-M415-3E-RA125-000	BCC0F47 BCC M313-M413-3E-RA101-000	
Connection 1	A, DIN-0°/180°-Valve connector, angled, 4-pole	M8x1-Female, straight, 3-pole, A-coded	
Connection 2	M12x1-Male, straight, 3-pole, A-coded	M12x1-Male, straight, 3-pole, A-coded	
Connection 3	—	—	
Function indicator	LED yellow	—	
Operating voltage Ub	24 VDC / 24 VAC	60 VDC / 60 VAC	
Rated current (40 °C)	4.0 A	3.0 A	
Protection degree	IP67	IP67	
Ambient temperature	-25...80 °C	-25...85 °C	
Approval/Conformity	EAC	EAC	
Productview	Page 288	Page 288	

	BCC0F2Y BCC M314-M414-3E-RA102-000	BCC0F2T BCC M415-M313-3F-RA101-000	BCC0F2U BCC M415-M314-3F-RA102-000	
	M8x1-Female, straight, 4-pole, A-coded	M12x1-Female, straight, 3-pole, A-coded	M12x1-Female, straight, 4-pole, A-coded	
	M12x1-Male, straight, 4-pole, A-coded	M8x1-Male, straight, 3-pole, A-coded	M8x1-Male, straight, 4-pole, A-coded	
	—	—	—	
	—	—	—	
	30 VDC / 30 VAC	60 VDC / 60 VAC	30 VDC / 30 VAC	
	3.0 A	3.0 A	3.0 A	
	IP67	IP67	IP67	
	-25...85 °C	-25...85 °C	-25...85 °C	
	EAC	EAC	EAC	
	Page 288	Page 288	Page 288	

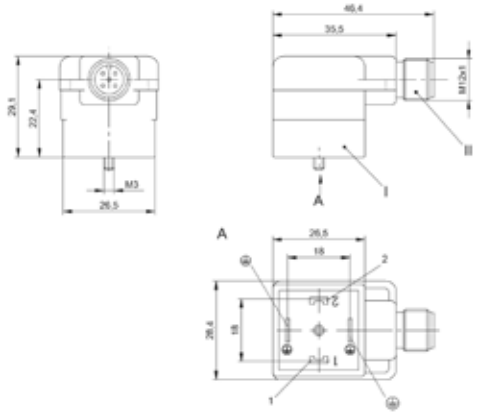

BCC0HKZ

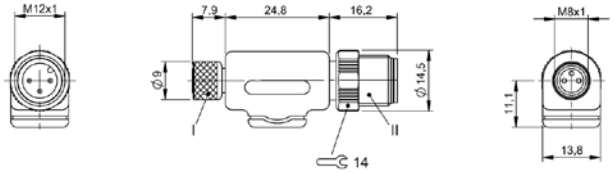

BCC0F47

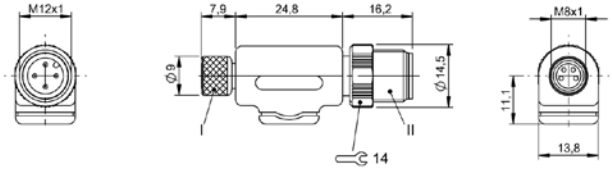

BCC0F2Y

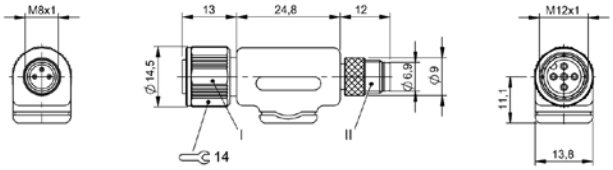

BCC0F2T

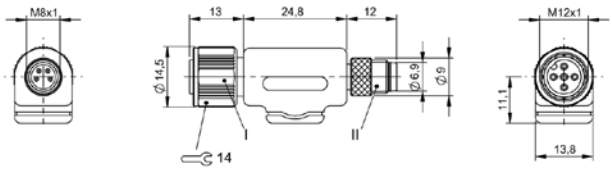

BCC0F2U

Matched to your bus system

TERMINATING RESISTORS

At Balluff you will always find the right terminating resistor. This is because we offer terminating resistors for all standard commercial bus systems: Profibus, Devicenet and CC-Link. Our broad product range includes both standard and custom components.

Available in various form factors and in molded versions.
All products are best suited for rugged use in the industrial environment. Rugged, noise-resistant and extremely reliable, they contribute to the high production quality of your systems.

The most important benefits

- Robust, immune to faults
- Resistant to shocks and vibration
- Industrial grade
- IP67, optionally IP68
- High-quality materials
- Reliable
- Various designs
- Suitable for all standard commercially available field bus systems
- Supports high manufacturing quality

	BCC06Y4 BCC M415-0000-2A-R03	BCC0A0A BCC A315-0000-1A-R04	BCC0A09 BCC A315-0000-2A-R04	
Interface	CC-Link	DeviceNet	DeviceNet	
Connection	M12x1-Male, straight, 5-pole, A-coded	7/8“-Female, straight, 5-pole	7/8“-Male, straight, 5-pole	
Function indicator	—	—	—	
Protection degree	IP68	IP68	IP68	
Ambient temperature	-20...80 °C	-20...80 °C	-20...80 °C	
Approval/Conformity	EAC	EAC	EAC	
Productview	Page 294	Page 294	Page 294	

	BCC0A08 BCC M415-0000-1A-R04	BCC09MR BCC M415-0000-2A-R04	BCC0C6E BCC M415-0000-1B-R01	BCC0718 BCC M415-0000-2B-R01	
	DeviceNet	DeviceNet	Profibus	Profibus	
	M12x1-Female, straight, 5-pole, A-coded	M12x1-Male, straight, 5-pole, A-coded	M12x1-Female, straight, 5-pole, B-coded	M12x1-Male, straight, 5-pole, B-coded	
	—	—	—	—	
	IP68	IP68	IP68	IP68	
	-40...90 °C	-40...90 °C	-40...90 °C	-20...80 °C	
	EAC	EAC	EAC	EAC	
	Page 294	Page 294	Page 294	Page 294	

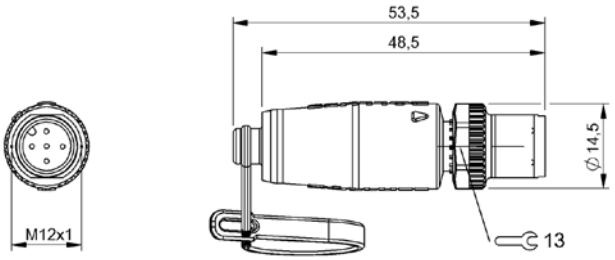
53,5
48,5
M12x1
⌀14,5
13

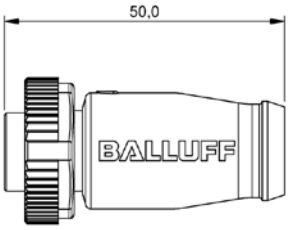
50,0
BALLUFF

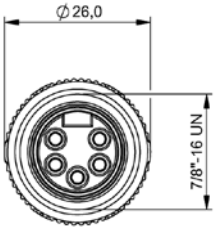
⌀26,0
7/8"-16 UN

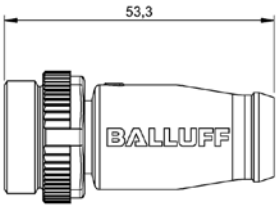
53,3
BALLUFF

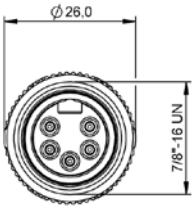
⌀26,0
7/8"-16 UN

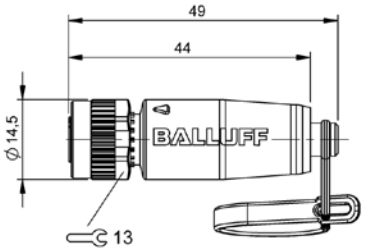
49
44
⌀14,5
BALLUFF
13

M12x1

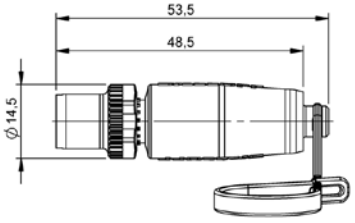
53,5
48,5
⌀14,5

M12x1

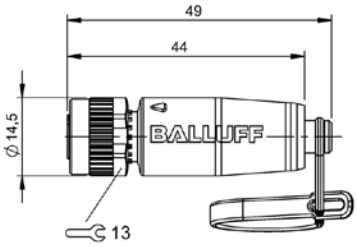
49
44
⌀14,5
BALLUFF
13

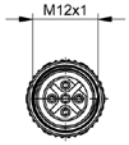
M12x1

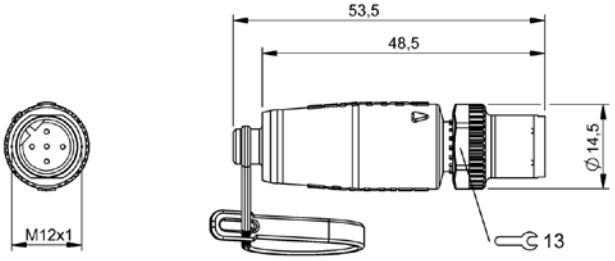
53,5
48,5
M12x1
⌀14,5
13

**Universal use,
even under harsh conditions**

JUNCTION BLOCKS

Junction blocks from Balluff connect sensors and actuators to the controller. They are especially suited for all applications where coolants and lubricants are used and also are ideal for harsh conditions. The fully encapsulated housing offers a high degree of media resistance and an outstanding resistance to shock and vibrations.

The most important benefits

- Easy connections
- Low space requirements
- High media resistance and precision fit with metal screw inserts
- Flexible mounting options

		BPI 4M3 ...
Connection		Cable
Version		M8, 4x
Rated voltage	No LED	60 V AC/DC
	with LED	30 V DC
Rated current, port		3 A
Total current max.		8 A
Degree of protection		IP67
3-pin, no LED		BPI 4M3030-5K-B0-KPX60①-_ _ _②
3-pin, PNP-LED		BPI 4M303P-5K-B0-KPX60①-_ _ _②
3-pin, NPN-LED		-
4-pin, no LED		BPI 4M3040-5K-B0-KPXA0①-_ _ _②
4-pin, PNP-LED		BPI 4M304P-5K-B0-KPXA0①-_ _ _②
4-pin, NPN-LED		-
Approval/Conformity		CE, UL, EAC
For drawing see page		312

Do you need more details? Our Product Finder at www.balluff.com provides you with product-specific information, including technical drawings, data sheets, user guides and more for each individual product. All items are available for download..

	BPI 6M3 ...	BPI 8M3 ...	BPI AM3 ...
	Cable	Cable	Cable
	M8, 6x	M8, 8x	M8, 10x
	60 V AC/DC	60 V AC/DC	60 V AC/DC
	30 V DC	30 V DC	30 V DC
	3 A	3 A	3 A
	8 A	8 A	8 A
	IP67	IP67	IP67
	BPI 6M3030-5K-B0-KPX80①-_ _ _②	BPI 8M3030-5K-B0-KPXA0①-_ _ _②	BPI AM3030-5K-B0-KPXC0①-_ _ _②
	BPI 6M303P-5K-B0-KPX80①-_ _ _②	BPI 8M303P-5K-B0-KPXA0①-_ _ _②	BPI AM303P-5K-B0-KPXC0①-_ _ _②
	-	-	-
	BPI 6M3040-5K-B0-KPXE0①-_ _ _②	BPI 8M3040-5K-B0-KPXK0①-_ _ _②	BPI AM3040-5K-B0-KPXP0①-_ _ _②
	BPI 6M304P-5K-B0-KPXE0①-_ _ _②	BPI 8M304P-5K-B0-KPXK0①-_ _ _②	BPI AM304P-5K-B0-KPXP0①-_ _ _②
	-	-	-
	CE, UL, EAC	CE, UL, EAC	CE, UL, EAC
	312, 313	313	314

①	Material	Color	Number of conductors × conductor cross-section	Cable temperature fixed in place	Cable temperature flexed
KPX60	PUR	Black	2 × 0.75 mm² 4 × 0.34 mm²	–25...+80 °C	–5...+80 °C
KPX80	PUR	Black	2 × 0.75 mm² 6 × 0.34 mm²	–25...+80 °C	–5...+80 °C
KPXA0	PUR	Black	2 × 0.75 mm² 8 × 0.34 mm²	–25...+80 °C	–5...+80 °C
KPXC0	PUR	Black	2 × 0.75 mm² 10 × 0.34 mm²	–25...+80 °C	–5...+80 °C
KPXE0	PUR	Black	2 × 0.75 mm² 12 × 0.34 mm²	–25...+80 °C	–5...+80 °C
KPXK0	PUR	Black	2 × 0.75 mm² 16 × 0.34 mm²	–25...+80 °C	–5...+80 °C
KPXP0	PUR	Black	2 × 0.75 mm² 20 × 0.34 mm²	–25...+80 °C	–5...+80 °C

②	Cable length
030	3 m
050	5 m
100	10 m
150	15 m

Other cable lengths on request!

		BPI 4M3 ...
Connection		Male, M12, 8-pin
Version		M8, 4x
Rated voltage	No LED	30 V AC/DC
	with LED	30 V DC
Rated current, port		2 A
Total current max.		2 A
Degree of protection		IP67
Ambient temperature		–25...+80 °C
3-pin, no LED		BPI 4M3030-5K-B0-SM48T
3-pin, PNP-LED		BPI 4M303P-5K-B0-SM48T
3-pin, NPN-LED		-
4-pin, no LED		–
4-pin, PNP-LED		–
4-pin, NPN-LED		–
Approval/Conformity		CE, UL, EAC
For drawing see page		314

Do you need more details? Our Product Finder at www.balluff.com provides you with product-specific information, including technical drawings, data sheets, user guides and more for each individual product. All items are available for download..

	BPI 4M3 ...	BPI 6M3 ...	BPI 6M3 ...
	Male, M12, 12-pin	Male, M12, 8-pin	Male, M12, 12-pin
	M8, 4x	M8, 6x	M8, 6x
	30 V AC/DC	30 V AC/DC	30 V AC/DC
	30 V DC	30 V DC	30 V DC
	1.5 A	2 A	1.5 A
	1.5 A	2 A	1.5 A
	IP67	IP67	IP67
	–25...+80 °C	–25...+80 °C	–25...+80 °C
	BPI 4M3030-5K-B0-SM4CT	BPI 6M3030-5K-B0-SM48T	BPI 6M3030-5K-B0-SM4CT
	BPI 4M303P-5K-B0-SM4CT	BPI 6M303P-5K-B0-SM48T	BPI 6M303P-5K-B0-SM4CT
	-	-	-
	BPI 4M3040-5K-B0-SM4CT	–	–
	BPI 4M304P-5K-B0-SM4CT	–	–
	-	–	–
	CE, UL, EAC	CE, UL, EAC	CE, UL, EAC
	314	315	316

Connection		
Version		
Rated voltage	No LED	
	with LED	
Rated current, port		
Total current max.		
Degree of protection		
Ambient temperature		
3-pin, no LED		
3-pin, PNP-LED		
3-pin, NPN-LED		
Approval/Conformity		
For drawing see page		

Do you need more details? Our Product Finder at www.balluff.com provides you with product-specific information, including technical drawings, data sheets, user guides and more for each individual product. All items are available for download..

	BPI 8M3 ...	BPI AM3 ...
	Male, M12, 12-pin	Male, M12, 12-pin
	M8, 8x	M8, 10x
	30 V AC/DC	30 V AC/DC
	30 V DC	30 V DC
	1.5 A	1.5 A
	1.5 A	1.5 A
	IP67	IP67
	–25...+80 °C	–25...+80 °C
	BPI 8M3030-5K-B0-SM4CT	BPI AM3030-5K-B0-SM4CT
	BPI 8M303P-5K-B0-SM4CT	BPI AM303P-5K-B0-SM4CT
	-	-
	CE, UL, EAC	CE, UL, EAC
	316	316

Connection		
Version		
Rated voltage	No LED	
	with LED	
Rated current, port		
Total current max.		
Degree of protection		
3-pin + PE, no LED		
3-pin + PE, PNP-LED		
3-pin + PE, NPN-LED		
4-pin + PE, no LED		
4-pin + PE, PNP-LED		
4-pin + PE, NPN-LED		
Approval/Conformity		
For drawing see page		

Do you need more details? Our Product Finder at www.balluff.com provides you with product-specific information, including technical drawings, data sheets, user guides and more for each individual product. All items are available for download..

	BPI 4M4 ...	BPI 8M4 ...
	Cable	Cable
	M12, 4x	M12, 8x
	60 V AC/DC	60 V AC/DC
	30 V DC	30 V DC
	4 A	4 A
	8 A	8 A
	IP67	IP67
	BPI 4M4A40-2K-B0-KPX70①-_ _ _②	BPI 8M4A40-2K-B0-KPXB0①-_ _ _②
	BPI 4M4A4P-2K-B0-KPX70①-_ _ _②	BPI 8M4A4P-2K-B0-KPXB0①-_ _ _②
	-	-
	BPI 4M4A50-2K-B0-KPXB0①-_ _ _②	BPI 8M4A50-2K-B0-KPXL0①-_ _ _②
	BPI 4M4A5P-2K-B0-KPXB0①-_ _ _②	BPI 8M4A5P-2K-B0-KPXL0①-_ _ _②
	-f	-
	CE, UL, EAC	CE, UL, EAC
	317	317

①	Material	Color	Number of conductors × conductor cross-section	Cable temperature fixed in place	Cable temperature flexed
KPX70	PUR	Black	3 × 1.0 mm² 4 × 0.34 mm²	–25...+80 °C	–5...+80 °C
KPXB0	PUR	Black	3 × 1.0 mm² 8 × 0.34 mm²	–25...+80 °C	–5...+80 °C
KPXL0	PUR	Black	3 × 1.0 mm² 19 × 0.34 mm²	–25...+80 °C	–5...+80 °C

②	Cable length
030	3 m
050	5 m
100	10 m
150	15 m

Other cable lengths on request!

		BPI 4M4 ...
Connection		Male, M23, 12-pin
Version		M12, 4x
Rated voltage	No LED	60 V AC/DC
	with LED	30 V DC
Rated current, port		4 A
Total current max.		8 A
Degree of protection		IP67
Ambient temperature		–25...+80 °C
3-pin + PE, no LED		BPI 4M4A40-2K-B0-SM6CT
3-pin + PE, PNP-LED		BPI 4M4A4P-2K-B0-SM6CT
3-pin + PE, NPN-LED		-
4-pin + PE, no LED		–
4-pin + PE, PNP-LED		–
4-pin + PE, NPN-LED		–
Approval/Conformity		CE, UL, EAC
For drawing see page		317

Do you need more details? Our Product Finder at www.balluff.com provides you with product-specific information, including technical drawings, data sheets, user guides and more for each individual product. All items are available for download..

	BPI 4M4 ...	BPI 8M4 ...	BPI 8M4 ...
	Male, M23, 19-pin	Male, M23, 12-pin	Male, M23, 19-pin
	M12, 4x	M12, 8x	M12, 8x
	60 V AC/DC	60 V AC/DC	60 V AC/DC
	30 V DC	30 V DC	30 V DC
	4 A	4 A	4 A
	8 A	8 A	8 A
	IP67	IP67	IP67
	–25...+80 °C	–25...+80 °C	–25...+80 °C
	–	BPI 8M4A40-2K-B0-SM6CT	–
	–	BPI 8M4A4P-2K-B0-SM6CT	–
	–	-	–
	BPI 4M4A50-2K-B0-SM6LT	–	BPI 8M4A50-2K-B0-SM6LT
	BPI 4M4A5P-2K-B0-SM6LT	–	BPI 8M4A5P-2K-B0-SM6LT
	-	–	-
	CE, UL, EAC	CE, UL, EAC	CE, UL, EAC
	318	318	318

Connection	
Version	
Rated voltage	
Rated current, port	
Total current max.	
Degree of protection	
Ambient temperature	
3-pin with PE, PNP-LED	
4-pin with PE, PNP-LED	
Approval/Conformity	
For drawing see page	

Do you need more details? Our Product Finder at www.balluff.com provides you with product-specific information, including technical drawings, data sheets, user guides and more for each individual product. All items are available for download..

	BPI 4M4 ...	BPI 8M4 ...
	Hood	Hood
	M12, 4x	M12, 8x
	30 V DC	30 V DC
	4 A	4 A
	8 A	8 A
	IP67	IP67
	–25...+80 °C	–25...+80 °C
	BPI 4M4A4P-2K-00-TPS9	BPI 8M4A4P-2K-00-TPSE
	BPI 4M4A5P-2K-00-TPSG	BPI 8M4A5P-2K-00-TPSN
	CE, EAC	CE, EAC
	319	319

	BPI 4M4 ...	BPI XXXX ...	
Connection	Hood	Hood with cable for base module without hood	
Version	M12, 4x	4-way	
Rated voltage	30 V DC	–	
Rated current, port	4 A	–	
Total current max.	8 A	–	
Degree of protection	IP67	–	
Ambient temperature	–25...+80 °C	–	
3-pin with PE, PNP-LED	BPI 4M4A4P-2K-00-TP09	–	
4-pin with PE, PNP-LED	BPI 4M4A5P-2K-00-TP0G	–	
3-pin with PE, no potential isolation	–	BPI T009-K-00-KPX70①-_ _ _②	
4-pin with PE, no potential isolation	–	BPI T00G-K-00-KPXB0①-_ _ _②	
4-pin with PE, with potential isolation	–	BPI T00G-K-00-KPXD0①-_ _ _②	
Universal	–	–	
Approval/Conformity	CE, EAC	CE, EAC	
For drawing see page	319	320	

Do you need more details? Our Product Finder at www.balluff.com provides you with product-specific information, including technical drawings, data sheets, user guides and more for each individual product. All items are available for download..

	BPI 8M4 ...	BPI XXX ...	BPI XXX ...
	Hood	Hood with cable for base module without hood	Hood without cable for base module without hood
	M12, 8x	8-way	Universal
	30 V DC	–	–
	4 A	–	–
	8 A	–	–
	IP67	–	–
	–25...+80 °C	–	–
	BPI 8M4A4P-2K-00-TP0E	–	–
	BPI 8M4A5P-2K-00-TP0N	–	–
	–	BPI T00E-K-00-KPXB0①-_ _ _②	–
	–	BPI T00N-K-00-KPXL0①-_ _ _②	–
	–	BPI T00N-K-00-KPXN0①-_ _ _②	–
	–	–	BPI T0SN-K-00
	CE, EAC	CE, EAC	CE, EAC
	320	320	320

①	Material	Color	Number of conductors × conductor cross-section	Cable temperature fixed in place	Cable temperature flexed
KPX70	PUR	Black	3 × 1.0 mm² 4 × 0.34 mm²	–25...+80 °C	–5...+80 °C
KPXB0	PUR	Black	3 × 1.0 mm² 8 × 0.34 mm²	–25...+80 °C	–5...+80 °C
KPXL0	PUR	Black	3 × 1.0 mm² 19 × 0.34 mm²	–25...+80 °C	–5...+80 °C
KPXD0	PUR	Black	5 × 1.0 mm² 8 × 0.34 mm²	–25...+80 °C	–5...+80 °C
KPXN0	PUR	Black	5 × 1.0 mm² 19 × 0.34 mm²	–25...+80 °C	–5...+80 °C

②	Cable length
030	3 m
050	5 m
100	10 m
150	15 m

Other cable lengths on request!

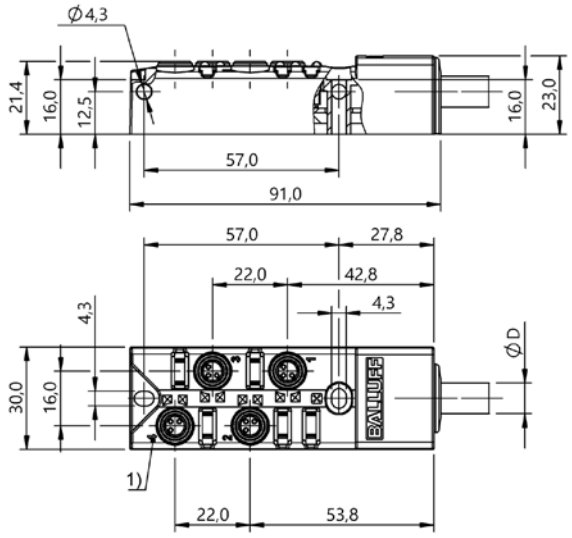

1) Slot numbering

BPI 4M3030-5K-B0-KPX60-...
BPI 4M303P-5K-B0-KPX60-...
BPI 4M303N-5K-B0-KPX60-...

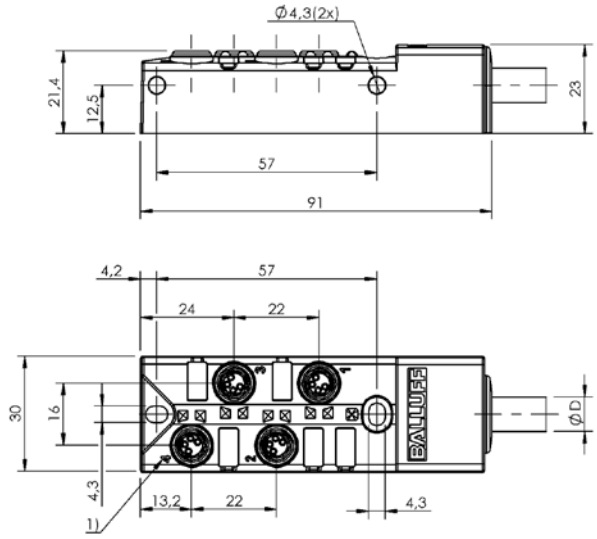

1) Slot numbering

BPI 4M3040-5K-B0-KPXA0-...
BPI 4M304P-5K-B0-KPXA0-...
BPI 4M304N-5K-B0-KPXA0-...

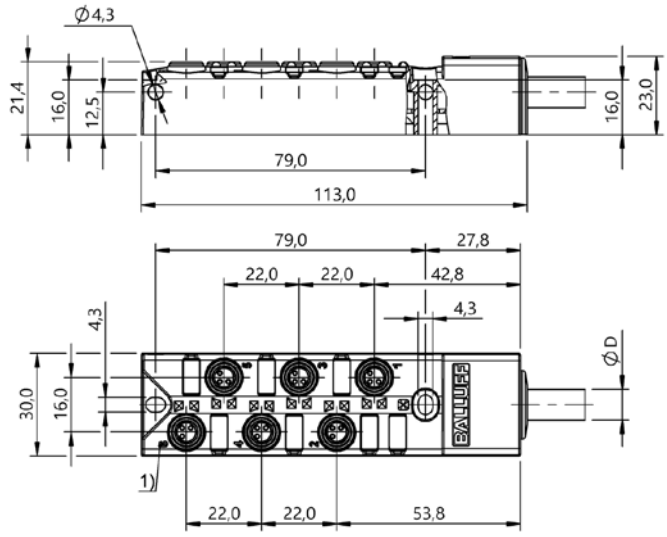

1) Slot numbering

BPI 6M3030-5K-B0-KPX80-...
BPI 6M303P-5K-B0-KPX80-...
BPI 6M303N-5K-B0-KPX80-...

Do you need more details? Our Product Finder at www.balluff.com provides you with product-specific information, including technical drawings, data sheets, user guides and more for each individual product. All items are available for download..

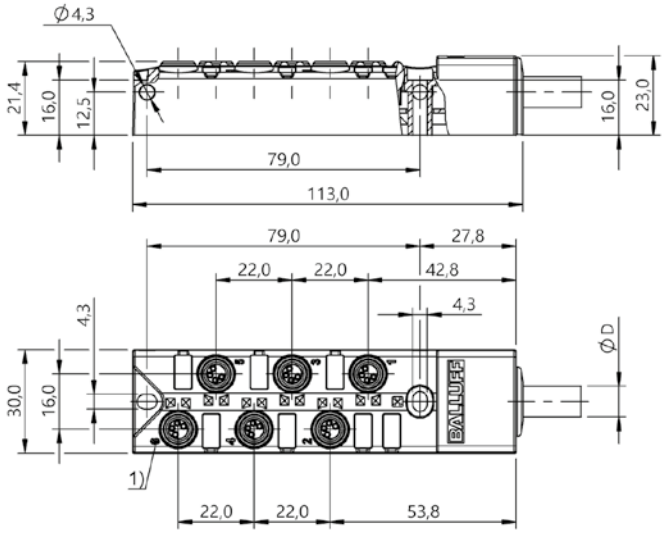

1) Slot numbering

BPI 6M3040-5K-B0-KPXE0-...
BPI 6M304P-5K-B0-KPXE0-...
BPI 6M304N-5K-B0-KPXE0-...

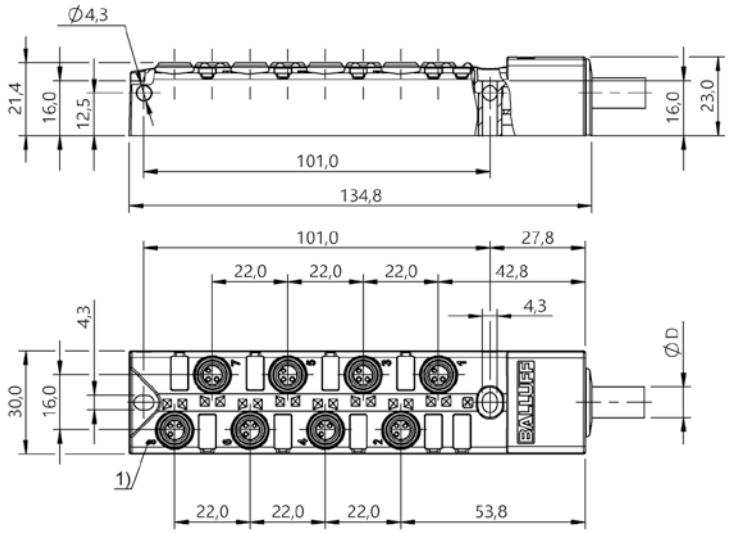

1) Slot numbering

BPI 8M3030-5K-B0-KPXA0-...
BPI 8M303P-5K-B0-KPXA0-...
BPI 8M303N-5K-B0-KPXA0-...

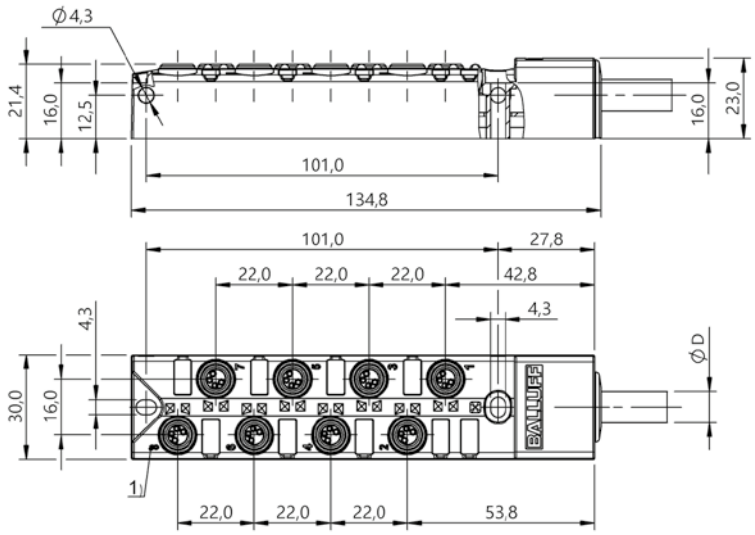

1) Slot numbering

BPI 8M3040-5K-B0-KPXK0-...
BPI 8M304P-5K-B0-KPXK0-...
BPI 8M304N-5K-B0-KPXK0-...

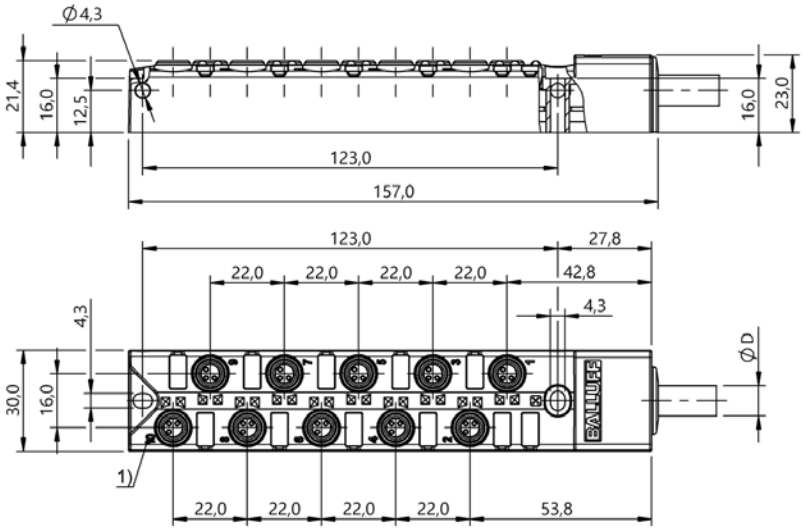

1) Slot numbering

BPI AM3030-5K-B0-KPXC0-...
BPI AM303P-5K-B0-KPXC0-...
BPI AM303N-5K-B0-KPXC0-...

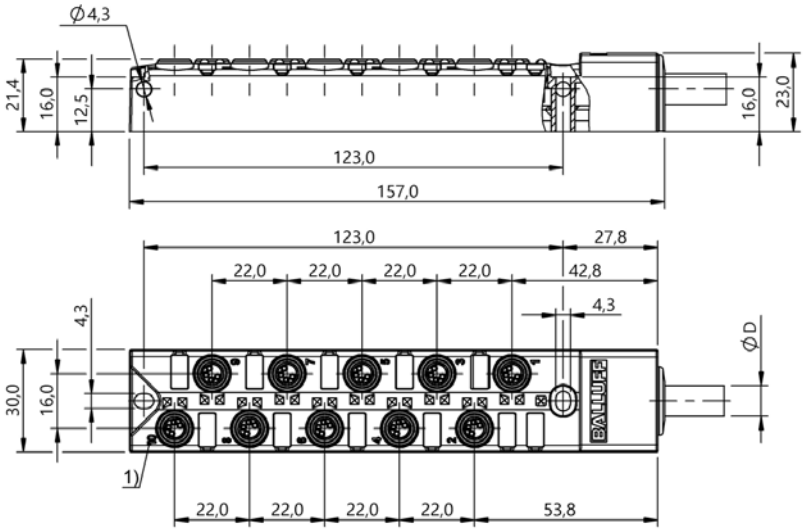

1) Slot numbering

BPI AM3040-5K-B0-KPXP0-...
BPI AM304P-5K-B0-KPXP0-...
BPI AM304N-5K-B0-KPXP0-...

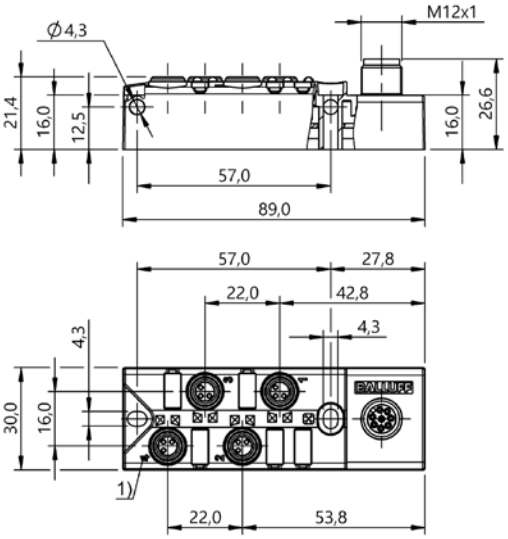

1) Slot numbering

BPI 4M3030-5K-B0-SM48T
BPI 4M303P-5K-B0-SM48T

Do you need more details? Our Product Finder at www.balluff.com provides you with product-specific information, including technical drawings, data sheets, user guides and more for each individual product. All items are available for download..

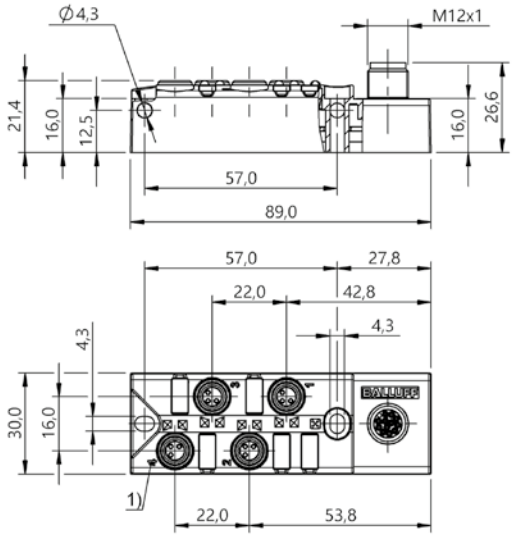

1) Slot numbering

BPI 4M3030-5K-B0-SM4CT
BPI 4M303P-5K-B0-SM4CT

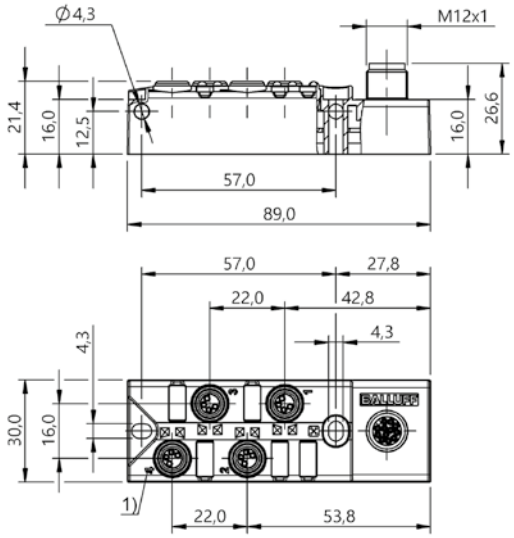

1) Slot numbering

BPI 4M3040-5K-B0-SM4CT
BPI 4M304P-5K-B0-SM4CT

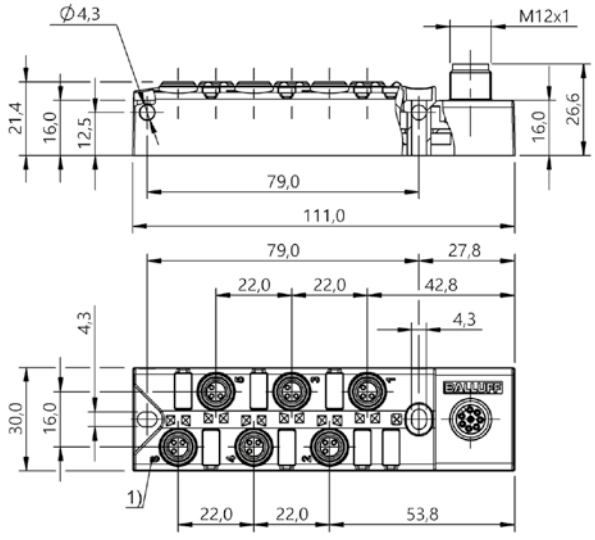

1) Slot numbering

BPI 6M3030-5K-B0-SM48T
BPI 6M303P-5K-B0-SM48T

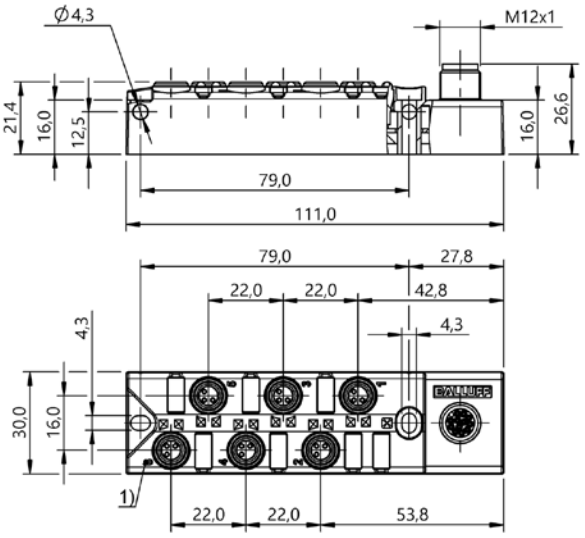

1) Slot numbering

BPI 6M3030-5K-B0-SM4CT
BPI 6M303P-5K-B0-SM4CT

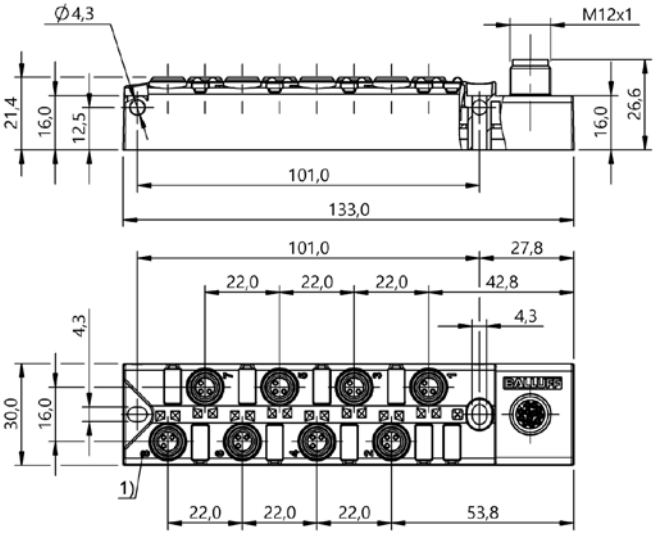

1) Slot numbering

BPI 8M3030-5K-B0-SM4CT
BPI 8M303P-5K-B0-SM4CT

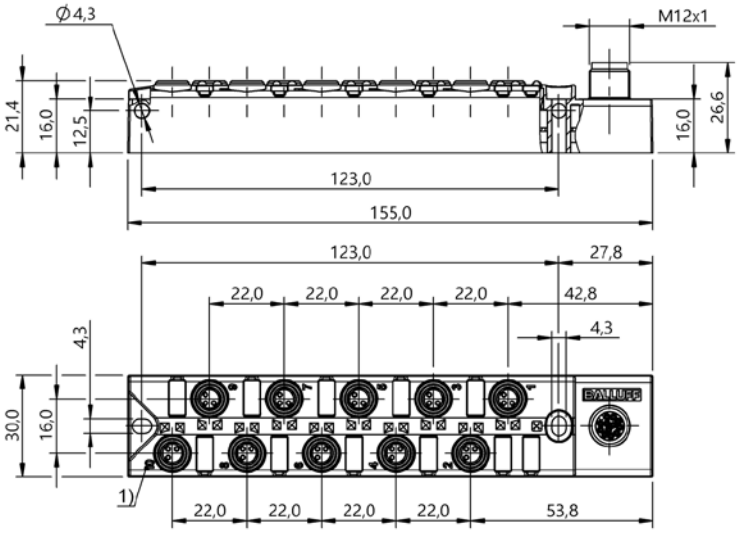

1) Slot numbering

BPI AM3030-5K-B0-SM4CT
BPI AM303P-5K-B0-SM4CT

Do you need more details? Our Product Finder at www.balluff.com provides you with product-specific information, including technical drawings, data sheets, user guides and more for each individual product. All items are available for download..

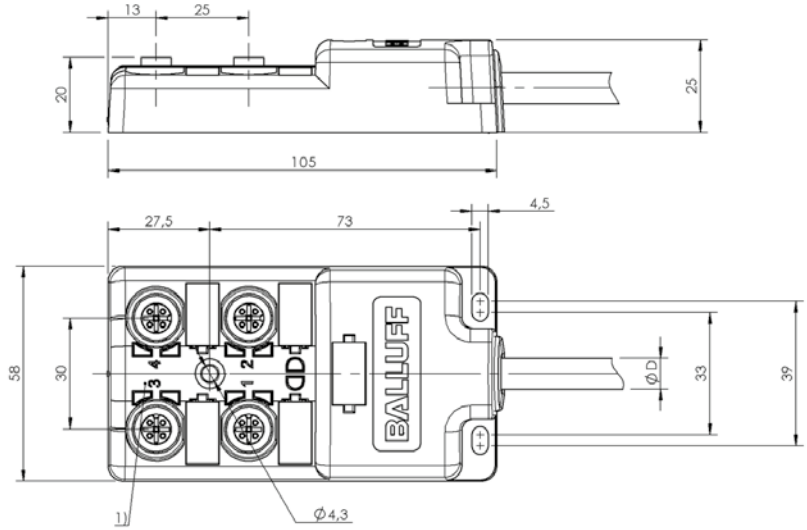

1) Slot numbering

BPI 4M4A40-2K-B0-KPX70-...
BPI 4M4A4P-2K-B0-KPX70-...
BPI 4M4A4N-2K-B0-KPX70-...

BPI 4M4A50-2K-B0-KPXB0-...
BPI 4M4A5P-2K-B0-KPXB0-...
BPI 4M4A5N-2K-B0-KPXB0-...

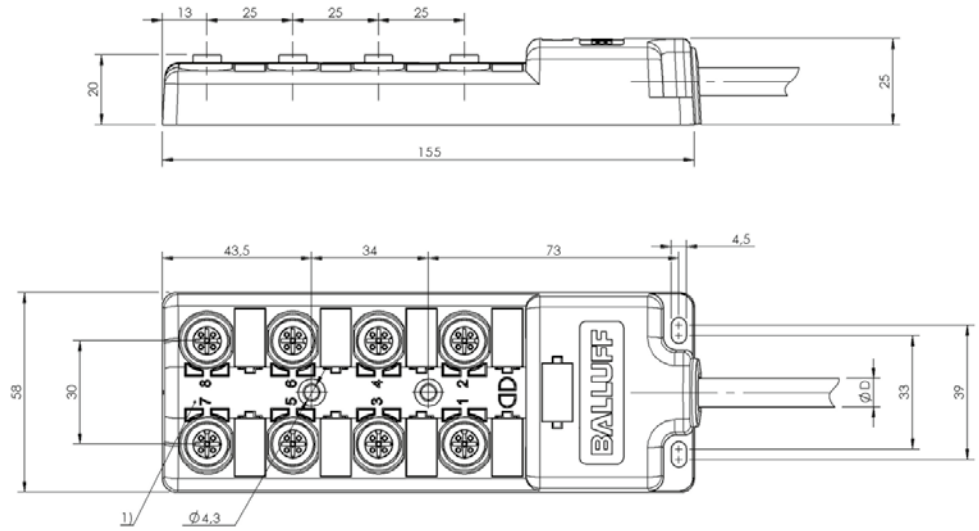

1) Slot numbering

BPI 8M4A40-2K-B0-KPXB0-...
BPI 8M4A4P-2K-B0-KPXB0-...
BPI 8M4A4N-2K-B0-KPXB0-...

BPI 8M4A50-2K-B0-KPXL0-...
BPI 8M4A5P-2K-B0-KPXL0-...
BPI 8M4A5N-2K-B0-KPXL0-...

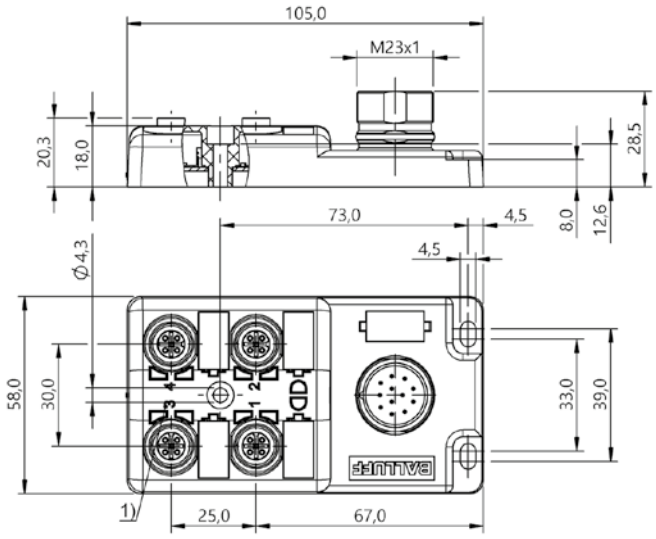

1) Slot numbering

BPI 4M4A40-2K-B0-SM6CT
BPI 4M4A4P-2K-B0-SM6CT

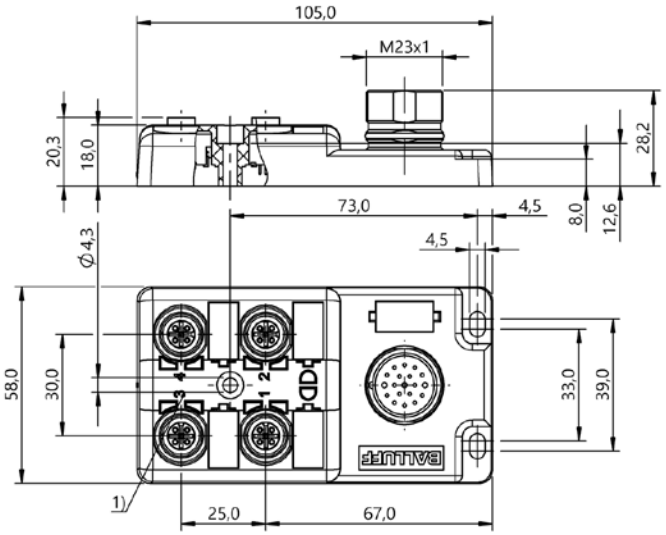

1) Slot numbering

BPI 4M4A50-2K-B0-SM6LT
BPI 4M4A5P-2K-B0-SM6LT

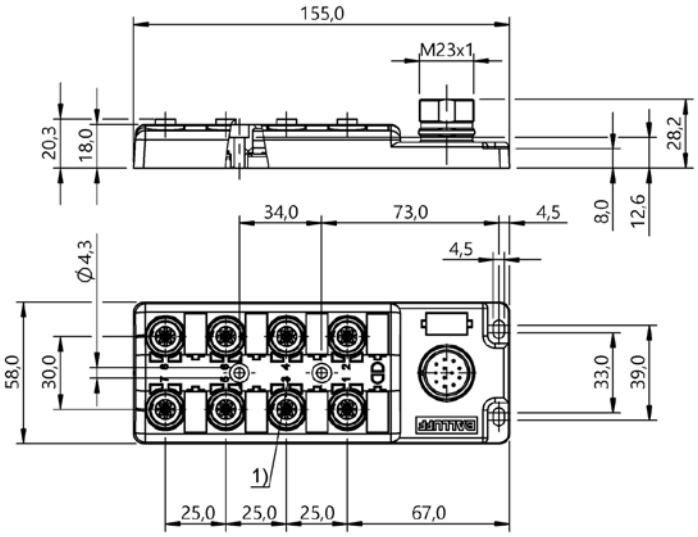

1) Slot numbering

BPI 8M4A40-2K-B0-SM6CT
BPI 8M4A4P-2K-B0-SM6CT

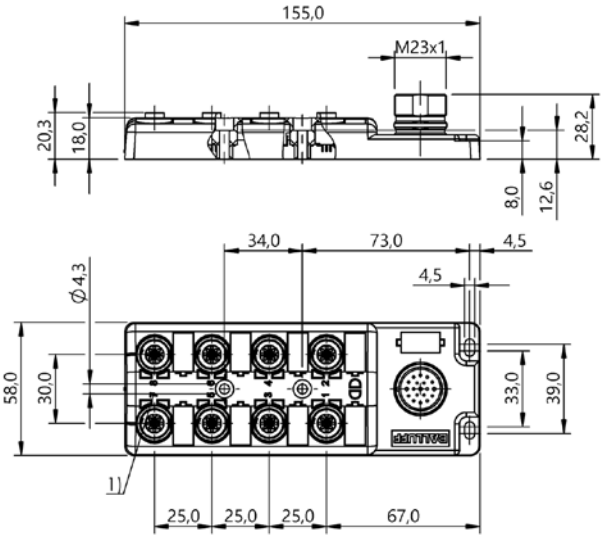

1) Slot numbering

BPI 8M4A50-2K-B0-SM6LT
BPI 8M4A5P-2K-B0-SM6LT

Do you need more details? Our Product Finder at www.balluff.com provides you with product-specific information, including technical drawings, data sheets, user guides and more for each individual product. All items are available for download..

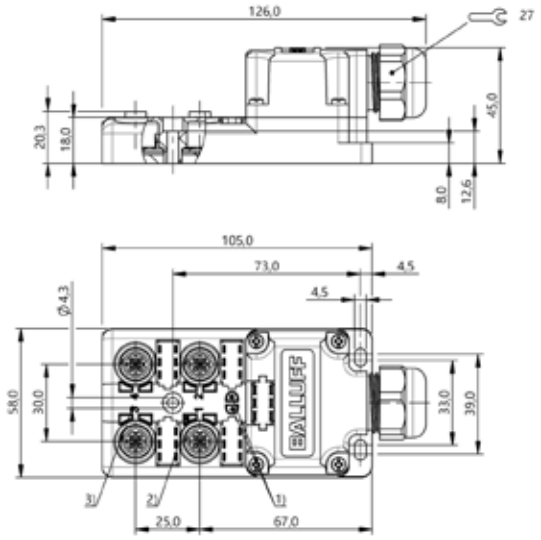

1) Power indicator
2) LED yellow for S1 on PIN 4
3) Slot numbering

BPI 4M4A4P-2K-00-TPS9
BPI 4M4A5P-2K-00-TPSG

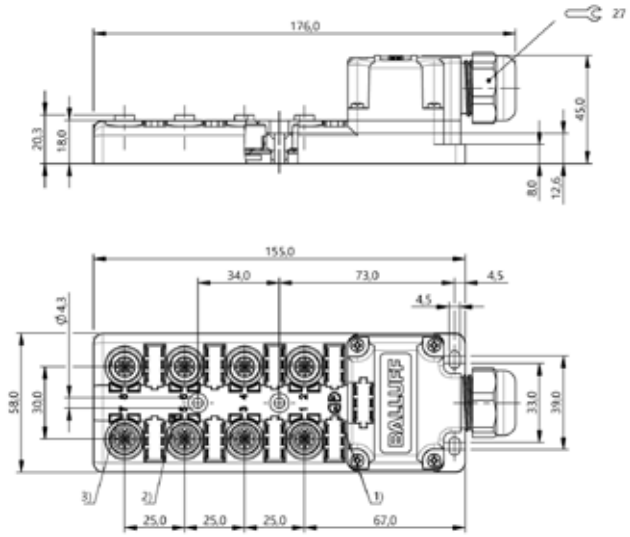

1) Power indicator
2) LED yellow for S1 on PIN 4
3) Slot numbering

BPI 8M4A4P-2K-00-TPSE
BPI 8M4A5P-2K-00-TPSN

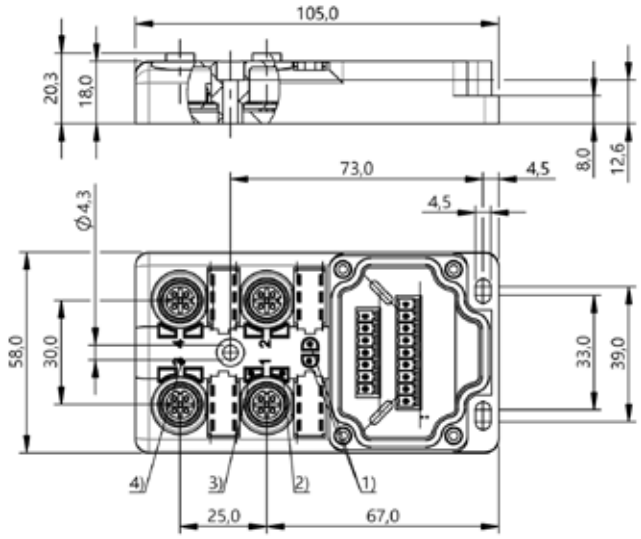

1) Power indicator
2) LED yellow for S1 on PIN 4
3) Slot numbering

BPI 4M4A4P-2K-00-TP09
BPI 4M4A5P-2K-00-TP0G

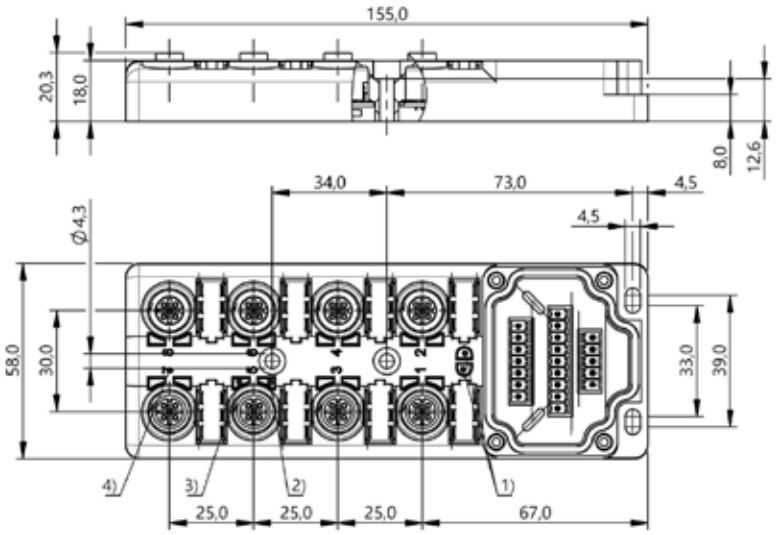

1) Power indicator
2) LED yellow for S1 on PIN 4
3) Slot numbering

BPI 8M4A4P-2K-00-TP0E
BPI 8M4A5P-2K-00-TP0N

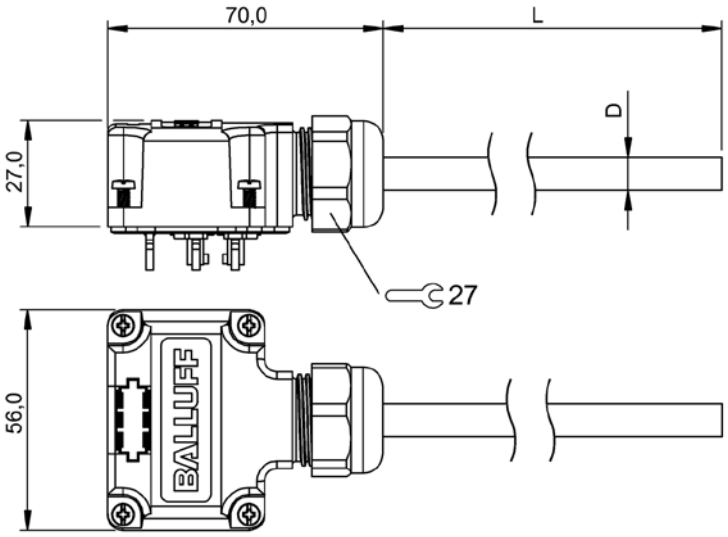

BPI T009-K-00-KPX70-...
BPI T00G-K-00-KPXB0-...
BPI T00G-K-00-KPXD0-...
BPI T00E-K-00-KPXB0-...
BPI T00N-K-00-KPXL0-...
BPI T00N-K-00-KPXN0-...

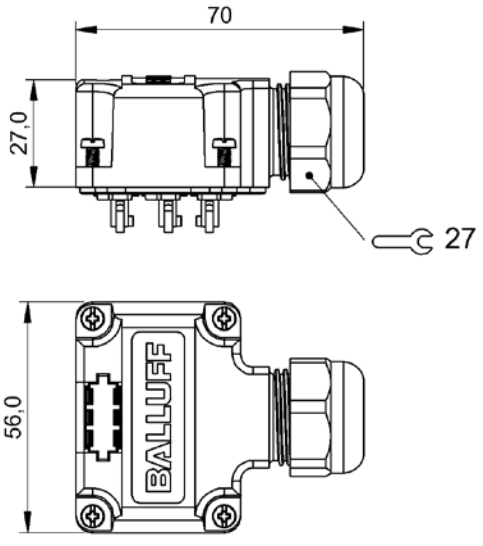

BPI T0SN-K-00

Do you need more details? Our Product Finder at www.balluff.com provides you with product-specific information, including technical drawings, data sheets, user guides and more for each individual product. All items are available for download..

Connectivity

BASICS AND GLOSSARY

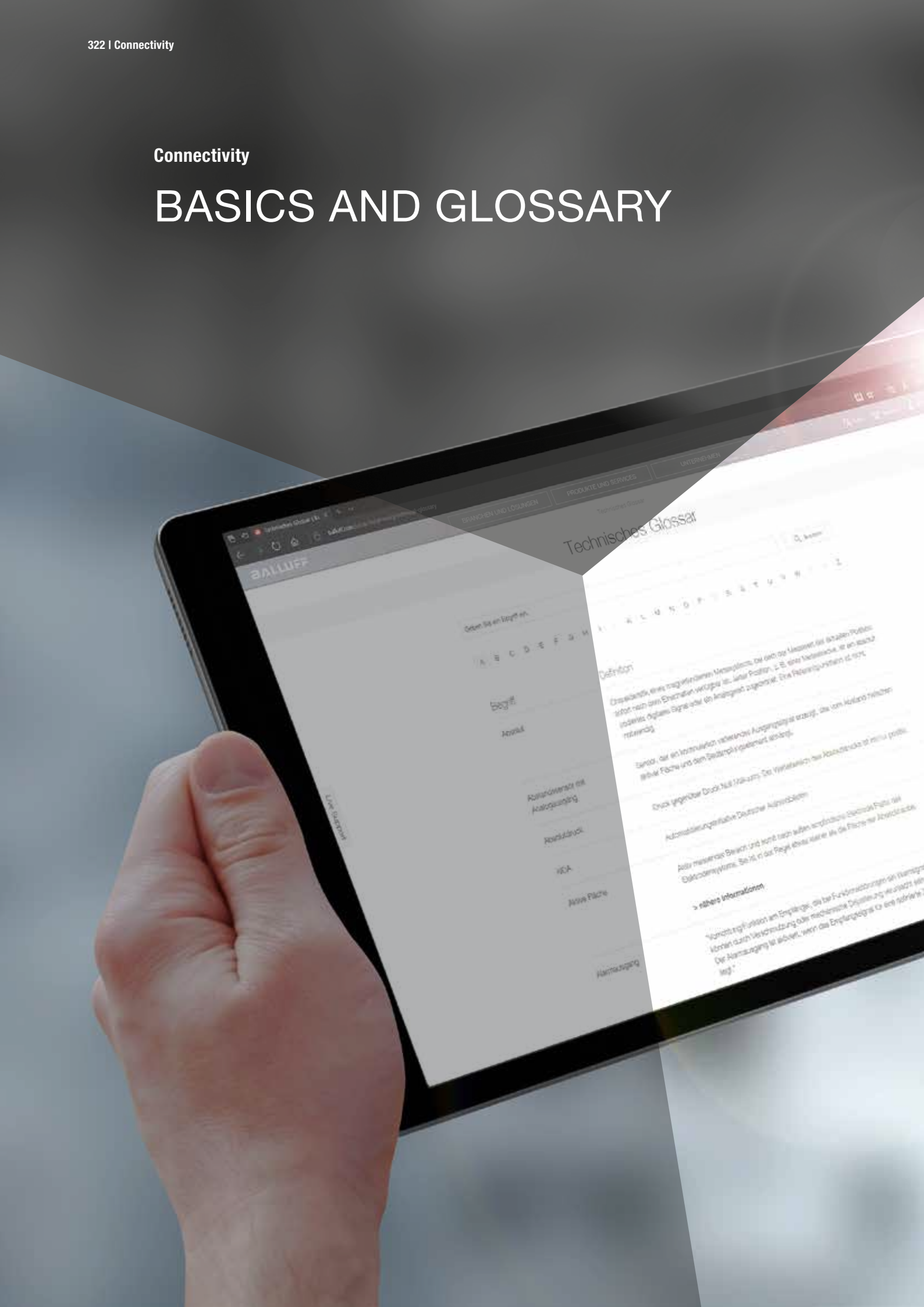

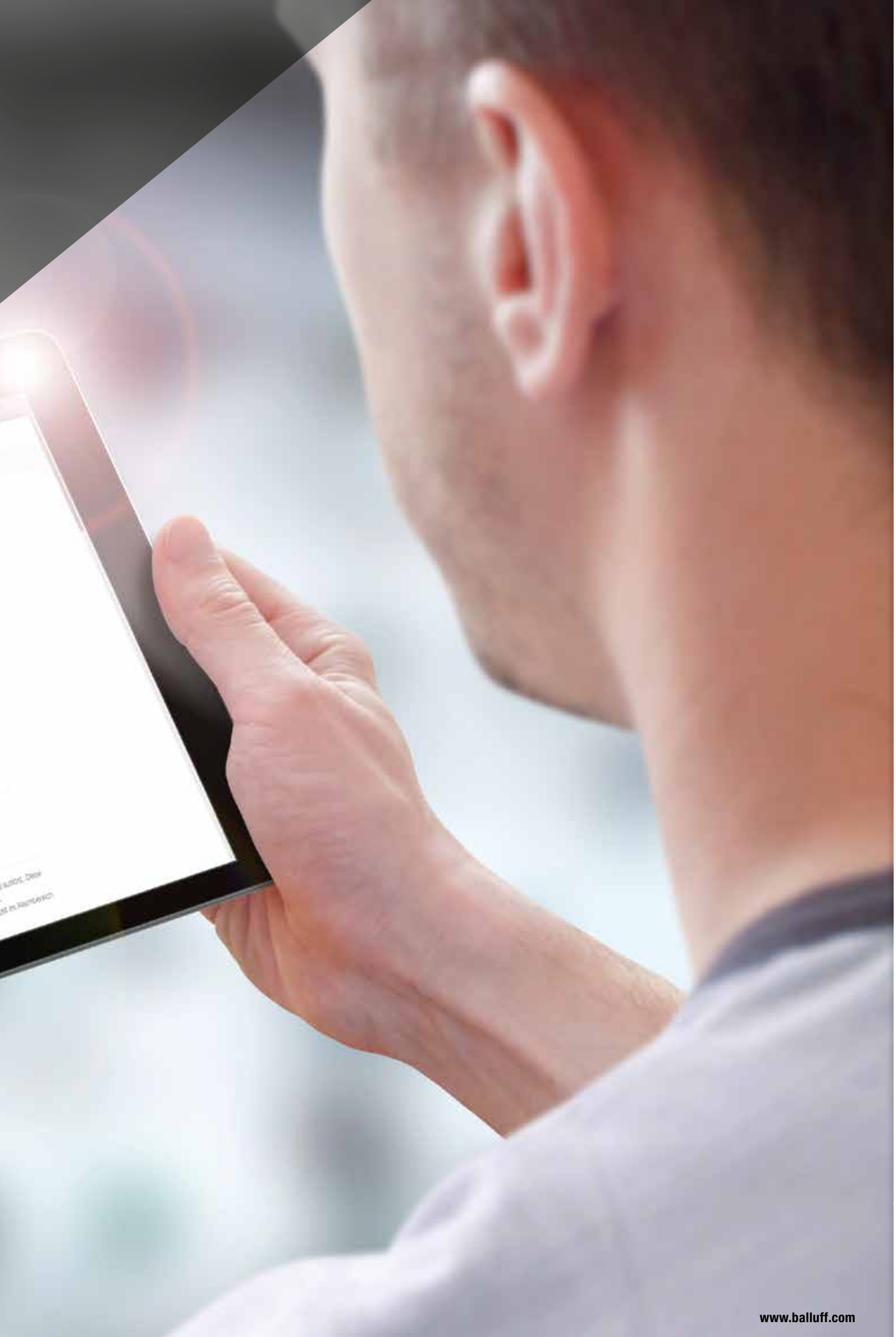

Connection	Indication of the form factor, coding and plug type
Wire fastening	How the connection of the leads in the plug is accomplished
Rated voltage	The maximum value of the electrical voltage in normal operation
Rated current	The electrical amperage which is assigned to an electrical device for a specified operating condition
Power-on indicator	Function indicator
Piercing technology	Piercing technology is a contact method where piercing connectors penetrate the insulation, move between the wires of the cable, and thus establish a secure contact with the cable
HDC cables	Cables for special applications, e.g. welding areas
Cable break	Interruption of the cable between the device and the controller due to mechanical damage
Cross-section	Cross-section of the cable, e.g. copper in mm^2 or AWG (American Wire Gauge)
Solder connections	Connection technique in which the conductor and connector are soldered together
Insulation displacement connection technology	Connection technique in which the conductor and connector are connected by means of a displacement contact through the wire insulation
Screw terminals	Connection technique in which the conductor and connector are connector by means of a clamp

High-quality gear for virtually any application

ACCESSORIES

innovating automation

Our great selection of high-quality accessories supports you in the optimum embedding of the sensor in machines and systems. Through easy assembly and installation, exact positioning and high machine availability. The wide Balluff product range offers the optimum gear for nearly every application.

Your Balluff solutions

- Fastening technology
- Lighting for Vision Systems
- Reflectors, fibers, optics
- Mechanical protection
- Signal converters and communication adapters
- Mechanical accessories

ACCESSORIES

330
REFLECTORS, FIBERS, OPTICS

332 Reflectors and reflective foils
350 Optics: Diaphragms, filters, lenses, deflectors

382
MECHANICAL PROTECTION

384 Protective tubes for cables
390 Plunger probe solutions
404 Protective caps and port covers
412 Protective housing
422 Sabotage protection
424 Mechanical Protection

428
FASTENING TECHNOLOGY

430 Flexible mounting system
454 Proximity sensor mounts with positive stops
464 Prox sensor mounts without positive stops
468 Universal brackets
488 Holders for Human Machine Interface
492 Brackets for vision sensors, SmartCameras and lights
496 Brackets for RFID systems
504 Safety Brackets
512 Mounting bracket for photoelectric sensors
524 Mounting brackets for magnetic sensors
532 BTL/BML holder: Control arms
536 Nuts

540
MECHANICAL ACCESSORIES

542 Rangefinder / tool
546 Magnet for profile style
550 Magnet for rod style
556 Mechanical Accessories

560
LIGHTING FOR VISION SYSTEMS AND MACHINES

562 Dark field lights
564 Background lights
572 Ring lights
576 Strip lights
580 Coaxial lights
584 Spot lights
588 Line lasers
593 Machine lights

602
SIGNAL CONVERTERS AND COMMUNICATION ADAPTERS

604 Analog switching amplifier
606 Communication adapter
608 Signal converter
618 Signal amplifier

622
BASICS AND GLOSSARY

High-quality accessories system for optical applications

REFLECTORS, FIBERS, OPTICS

Our accessories for optical applications include round and square reflectors and reflex films. You can obtain plastic and glass fibers as well as shields, lenses, filters and deflecting mirrors.

The optical accessory system is qualified for Balluff sensors and available in various versions, including for demanding applications.

The most important benefits

- High quality and flexible
- Simple to install
- Compatibility

	BAM01CF BOS R-40	BAM01HF BOS R-45	BAM00UM BOS R-12	
Version	Reflective foil, micro-pyramids	Reflective foil, micro-pyramids	Cube corner 0.9 mm	
Use	for photoelectric retroreflective sensors, for photoelectric laser retroreflective sensors	for photoelectric retroreflective sensors, for photoelectric laser retroreflective sensors	for photoelectric retroreflective sensors, for photoelectric laser retroreflective sensors	
Style	Film cutoff, Rectangular	Film cutoff, Rectangular	Square, 2 mounting holes	
Dimension	50 x 100 x 0.6 mm	200 x 300 x 0.5 mm	14 x 23 x 4.9 mm	
Sensing surface	50.0 cm²	600.0 cm²	1.7 cm²	
Ambient temperature	-20...60 °C	-20...60 °C	-20...60 °C	
Material sensing surface	PMMA, rear coated Al	PMMA, rear coated Al	PMMA	
Material	Film	Film	ABS	
Light type	non-polarized light, also for polarized light	non-polarized light, also for polarized light	non-polarized light, also for polarized light	
Mounting	Self-adhesive	Self-adhesive	Adhesive, Screw M1.5	
Approval/Conformity	—	—	—	
Productview	Page 344	Page 344	Page 344	

	BAM00UY BOS R-22	BAM01H9 BOS R-41	BAM023T BOS R-55	BAM023U BOS R-56	BAM00UN BOS R-13
	Cube corner 1.2 mm	Cube corner 1.2 mm	Cube corner 1.1 mm	Micro-pyamids	Cube corner 1.2 mm
	for photoelectric retroreflective sensors, for photoelectric laser retroreflective sensors	for photoelectric retroreflective sensors, for photoelectric laser retroreflective sensors	for photoelectric retroreflective sensors, for photoelectric laser retroreflective sensors	for photoelectric retroreflective sensors, for photoelectric laser retroreflective sensors	for photoelectric retroreflective sensors, for photoelectric laser retroreflective sensors
	Square, 2 mounting holes	Square, 2 mounting holes	Square, 2 mounting holes	Square, 2 mounting holes	Cylinder
	51 x 61 x 7.5 mm	10 x 40 x 3.7 mm	20 x 32 x 3 mm	20 x 32 x 3 mm	25 × 5.5 mm
	22.6 cm²	1.4 cm²	2.7 cm²	2.7 cm²	3.3 cm²
	-20...60 °C	-20...60 °C	-20...140 °C	-20...60 °C	-20...60 °C
	PMMA	PMMA	Solidchem	PMMA	PMMA
	ABS	ABS	Solidchem	ABS	ABS
	non-polarized light, also for polarized light	non-polarized light, also for polarized light	non-polarized light, also for polarized light	non-polarized light, also for polarized light	non-polarized light, also for polarized light
	Adhesive, Screw M4	Adhesive, Screw M3	Screw M3	Screw M3	Adhesive
	—	—	Solidchem, TÜV Rheinland, Ecolab	—	—
	Page 344	Page 344	Page 344	Page 344	Page 344

	BAM00UT BOS R-16	BAM01H7 BOS R-38	BAM01HA BOS R-42	
Version	Cube corner 1.2 mm	Cube corner 0.9 mm	Cube corner 0.9 mm	
Use	for photoelectric retroreflective sensors, for photoelectric laser retroreflective sensors	for photoelectric retroreflective sensors, for photoelectric laser retroreflective sensors	for photoelectric retroreflective sensors, for photoelectric laser retroreflective sensors	
Style	Cylinder	Cylinder with threaded pin	Cylinder with threaded pin	
Dimension	Ø 21 x 5.2 mm	Ø 10 x 13.6 mm	Ø 19 x 14.6 mm	
Sensing surface	1.9 cm²	0.3 cm²	1.9 cm²	
Ambient temperature	-20...60 °C	-20...60 °C	-20...60 °C	
Material sensing surface	PMMA	PMMA	PMMA	
Material	ABS	ABS	ABS	
Light type	non-polarized light, also for polarized light	non-polarized light, also for polarized light	non-polarized light, also for polarized light	
Mounting	Adhesive	M3 nut	M3 nut	
Approval/Conformity	—	—	—	
Productview	Page 345	Page 345	Page 345	

	BAM01HC BOS R-43	BAM0333 BAM RF-XO-030-S000/04-PM-FA	BAM00W6 BOS R-32-0,40	BAM00W9 BOS R-35	BAM01JM BOS R-50
	Cube corner 1.2 mm	Reflective foil, micro-pyramids	Reflective foil, micro-pyramids	Reflective film, micro-glass balls	Reflective foil, micro-pyramids
	for photoelectric retroreflective sensors, for photoelectric laser retroreflective sensors	for photoelectric retroreflective sensors	for photoelectric retroreflective sensors	for photoelectric retroreflective sensors	for photoelectric retroreflective sensors
	Cylinder with threaded pin	Film cutoff, Rectangular	Film cutoff, Rectangular	Film cutoff, Rectangular	Film cutoff, Rectangular
	Ø 25 x 15.5 mm	35 x 40 x 0.5 mm	50 x 90 x 0.5 mm	200 x 200 x 0.5 mm	100 x 100 x 0.5 mm
	3.3 cm²	14.0 cm²	45.0 cm²	400.0 cm²	100.0 cm²
	-20...60 °C	-20...60 °C	-20...60 °C	-20...60 °C	-20...60 °C
	PMMA	Acrylic	PMMA	Glass	PMMA
	ABS	Film	Film	Film	Film
	non-polarized light, also for polarized light	non-polarized light, also for polarized light	non-polarized light, also for polarized light	non-polarized light	non-polarized light, also for polarized light
	M4 nut	Self-adhesive	Self-adhesive	Self-adhesive	Self-adhesive
	—	—	—	—	—
	Page 345	Page 345	Page 345	Page 345	Page 345

	BAM00WC BOS R-6-0,25	BAM00WE BOS R-6-45	BAM02R3 BOS R-60-22	
Version	Reflective foil, micro-pyramids	Reflective foil, micro-pyramids	Reflective foil, micro-pyramids	
Use	for photoelectric retroreflective sensors	for photoelectric retroreflective sensors	for photoelectric retroreflective sensors	
Style	Film cutoff, Rectangular	Foil web	Foil web	
Dimension	50 x 250 x 0.3 mm	50 mm x 45 m x 0.3 mm	100 × 0.5 mm	
Sensing surface	125.0 cm²	22850.0 cm²	22800.0 cm²	
Ambient temperature	-20...60 °C	-20...60 °C	-20...60 °C	
Material sensing surface	PMMA	PMMA	PMMA	
Material	Film	Film	Film	
Light type	non-polarized light	non-polarized light	non-polarized light, also for polarized light	
Mounting	Self-adhesive	Self-adhesive	Self-adhesive	
Approval/Conformity	—	—	—	
Productview	Page 346	Page 346	Page 346	

	BAM00WF BOS R-7-0,25	BAM00WH BOS R-7-22	BAM00WJ BOS R-8-0,25	BAM00WK BOS R-8-22	BAM0330 BAM RF-X0-025-S023/40-PM-AS
	Reflective foil, micro-py-ramids	Reflective foil, micro-py-ramids	Reflective foil, micro-py-ramids	Reflective foil, micro-py-ramids	Cube corner 4 mm
	for photoelectric retrore-flective sensors	for photoelectric retrore-flective sensors	for photoelectric retrore-flective sensors	for photoelectric retrore-flective sensors	for photoelectric retrore-flective sensors
	Film cutoff, Rectangular	Foil web	Film cutoff, Rectangular	Foil web	Square, 2 mounting holes
	50 x 250 x 0.5 mm	50 mm x 22 m x 0.5 mm	25 x 250 x 0.5 mm	25 mm x 22 m x 0.5 mm	51 x 72 x 7.3 mm
	125.0 cm²	11000.0 cm²	62.5 cm²	5500.0 cm²	22.6 cm²
	-20...60 °C	-20...60 °C	-20...60 °C	-20...60 °C	-20...60 °C
	PMMA	PMMA	PMMA	PMMA	PMMA
	Film	Film	Film	Film	ABS
	non-polarized light, also for polarized light	non-polarized light, also for polarized light	non-polarized light, also for polarized light	non-polarized light, also for polarized light	non-polarized light, also for polarized light
	Self-adhesive	Self-adhesive	Self-adhesive	Self-adhesive	Screw M4
	—	—	—	—	—
	Page 346	Page 346	Page 346	Page 346	Page 346

	BAM0331 BAM RF-XO-026-S012/40-PM-AS	BAM0332 BAM RF-XO-027-S004/25-PM-AS	BAM00UL BOS R-11	
Version	Cube corner 4 mm	Cube corner 1.2 mm	Cube corner 4 mm	
Use	for photoelectric retrore-flective sensors	for photoelectric retrore-flective sensors	for photoelectric retrore-flective sensors	
Style	Square, 2 mounting holes	Square, 2 mounting holes	Square, 2 mounting holes	
Dimension	35 x 42 x 8.6 mm	12.9 x 33.4 x 11.2 mm	84 x 84 x 9.1 mm	
Sensing surface	9.6 cm²	2.2 cm²	63.7 cm²	
Ambient temperature	-20...60 °C	-20...60 °C	-20...60 °C	
Material sensing surface	PMMA	PMMA	PMMA	
Material	ABS	ABS	ABS	
Light type	non-polarized light, also for polarized light	non-polarized light, also for polarized light	non-polarized light, also for polarized light	
Mounting	Screw M3	Screw M3	Adhesive, Screw M3	
Approval/Conformity	—	—	—	
Productview	Page 347	Page 347	Page 347	

	BAM00W7 BOS R-33	BAM00W8 BOS R-34	BAM01CM BOS R-36	BAM01HE BOS R-44	BAM01JP BOS R-46
	Cube corner 4 mm	Cube corner 4 mm	Cube corner 4 mm	Cube corner 4 mm	Cube corner 4 mm
	for photoelectric retrore-flective sensors	for photoelectric retrore-flective sensors	for photoelectric retrore-flective sensors	for photoelectric retrore-flective sensors	for photoelectric retrore-flective sensors
	Square, 2 mounting holes	Square, 2 mounting holes	Square, 2 mounting holes	Square, 2 mounting holes	Square, 2 mounting holes
	19 x 60 x 6.1 mm	40 x 60 x 7.5 mm	40 x 60 x 7.5 mm	40 x 60 x 7.5 mm	40 x 60 x 7.5 mm
	4.9 cm²	19.9 cm²	19.9 cm²	19.9 cm²	19.9 cm²
	-20...60 °C	-20...150 °C	-20...60 °C	-20...140 °C	-20...60 °C
	PMMA	HOT	PMMA Anti-fog coated	Solidchem	PMMA
	ABS	HOT	ABS	Solidchem	ABS
	non-polarized light, also for polarized light	non-polarized light, also for polarized light	non-polarized light, also for polarized light	non-polarized light, also for polarized light	non-polarized light, also for polarized light
	Adhesive, Screw M4	Adhesive, Screw M3	Adhesive, Screw M3	Adhesive, Screw M3	Adhesive, Screw M3
	—	—	—	Solidchem, TÜV Rhein-land, Ecolab	—
	Page 347	Page 347	Page 347	Page 347	Page 347

	BAM01JN BOS R-47	BAM01LA BOS R-48	BAM01NH BOS R-49	
Version	Cube corner 4 mm	Cube corner 4 mm	Cube corner 0.9 mm	
Use	for photoelectric retrore-flective sensors	for photoelectric retrore-flective sensors	for photoelectric retrore-flective sensors	
Style	Square, 2 mounting holes	Square, 2 mounting holes	Square, 2 mounting holes	
Dimension	100 x 100 x 9.2 mm	23 x 82 x 7.5 mm	14 x 23 x 4.9 mm	
Sensing surface	92.5 cm²	10.0 cm²	1.7 cm²	
Ambient temperature	-20...60 °C	-20...60 °C	-20...110 °C	
Material sensing surface	PMMA	PMMA	HOT	
Material	ABS	ABS	HOT	
Light type	non-polarized light, also for polarized light	non-polarized light, also for polarized light	non-polarized light, also for polarized light	
Mounting	Adhesive, Screw M3	Adhesive, Screw M3	Adhesive, Screw M1.5	
Approval/Conformity	—	—	—	
Productview	Page 348	Page 348	Page 348	

	BAM00WA BOS R-5	BAM00WL BOS R-9	BAM00UK BOS R-1	BAM0126 BOS R-10	BAM00UP BOS R-14
	Cube corner 4 mm	Cube corner 4 mm	Cube corner 4 mm	Cube corner 4 mm	Cube corner 4 mm
	for photoelectric retroreflective sensors	for photoelectric retroreflective sensors	for photoelectric retroreflective sensors	for photoelectric retroreflective sensors	for photoelectric retroreflective sensors
	Square, 2 mounting holes	Square, 2 mounting holes	Cylinder, 1 fastening hole	Cylinder, 2 mounting holes	Cylinder with expanding rivet
	18 x 120 x 6 mm	51 x 61 x 8 mm	Ø 84 x 7.3 mm	Ø 62 x 8.8 mm	Ø 51 x 7.4 mm
	13.9 cm²	22.6 cm²	50.9 cm²	20.4 cm²	17.7 cm²
	-20...60 °C	-20...60 °C	-20...60 °C	-20...60 °C	-20...100 °C
	PMMA	PMMA	PMMA	PMMA	PC
	ABS	ABS	ABS	ABS	PC
	non-polarized light, also for polarized light	non-polarized light, also for polarized light	non-polarized light, also for polarized light	non-polarized light, also for polarized light	non-polarized light, also for polarized light
	Adhesive, Screw M4	Adhesive, Screw M4	Adhesive, Screw M4	Adhesive, Screw M4	Diameter 6.0 mm
	—	—	—	—	—
	Page 348	Page 348	Page 348	Page 348	Page 348

	BAM00UR BOS R-15	BAM00UW BOS R-2	BAM00W4 BOS R-3	
Version	Cube corner 2 mm	Cube corner 2.5 mm	Cube corner 2 mm	
Use	for photoelectric retroreflective sensors	for photoelectric retroreflective sensors	for photoelectric retroreflective sensors	
Style	Cylinder	Cylinder	Cylinder	
Dimension	Ø 21 x 5.2 mm	Ø 46 x 6.5 mm	Ø 21 x 5.2 mm	
Sensing surface	2.4 cm²	11.6 cm²	1.9 cm²	
Ambient temperature	-20...100 °C	-20...60 °C	-20...60 °C	
Material sensing surface	HOT	PMMA	PMMA	
Material	HOT	ABS	ABS	
Light type	non-polarized light, also for polarized light	non-polarized light, also for polarized light	non-polarized light, also for polarized light	
Mounting	Glue	Glue	Glue	
Approval/Conformity	—	—	—	
Productview	Page 349	Page 349	Page 349	

	BAM01H6 BOS R-31				
	Cube corner 5 mm				
	for photoelectric retrore-flective sensors				
	Cylinder				
	Ø 52 x 9 mm				
	14.3 cm²				
	-20...500 °C				
	Borosilicate crown glass				
	Borosilicate crown glass				
	non-polarized light, also for polarized light				
	Clamps				
	—				
	Page 349				

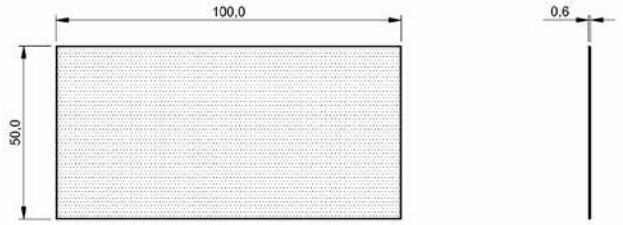

BAM01CF

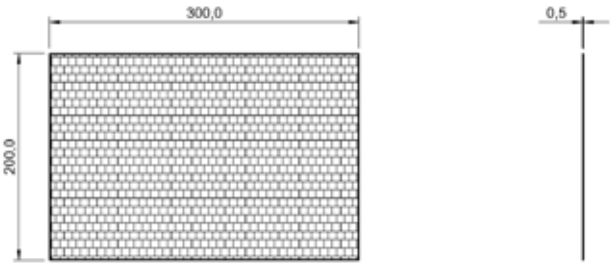

BAM01HF

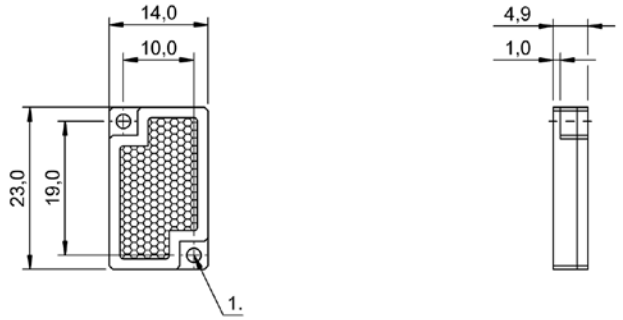

BAM00UM

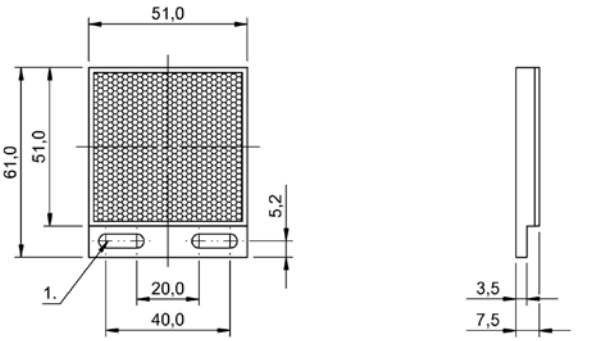

BAM00UY

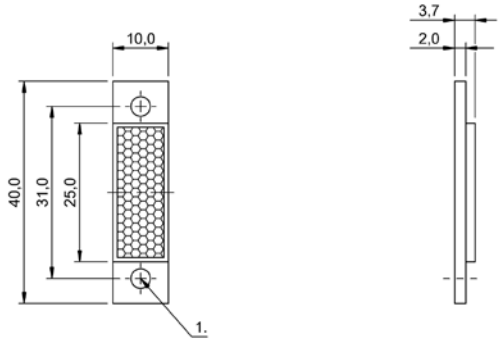

BAM01H9

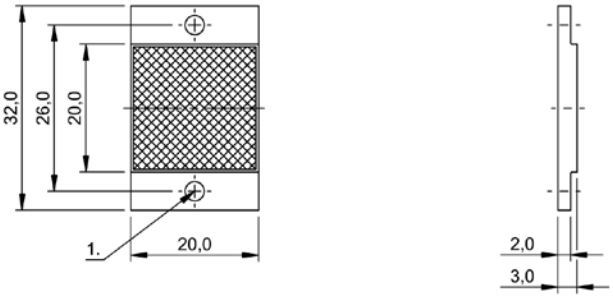

BAM023T

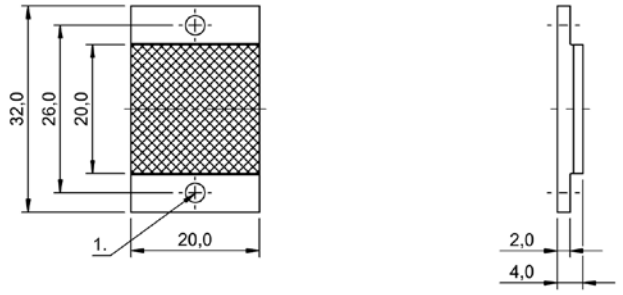

BAM023U

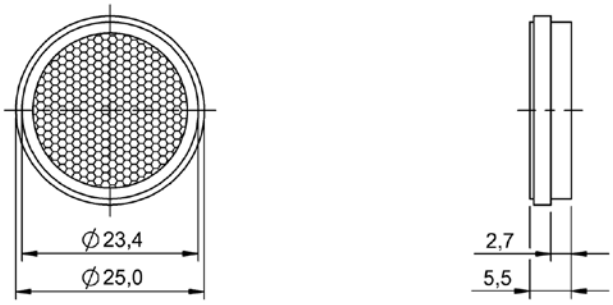

BAM00UN

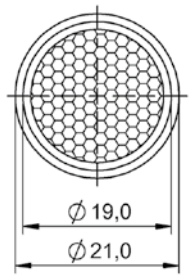

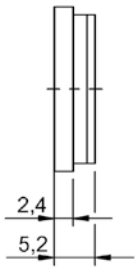

BAM00UT

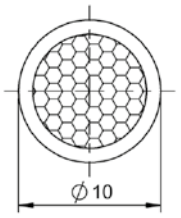

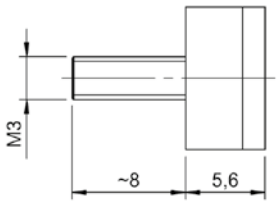

BAM01H7

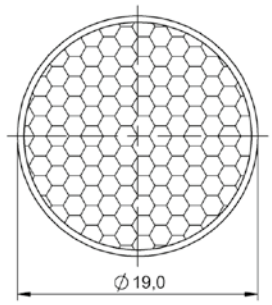

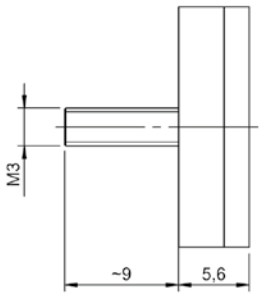

BAM01HA

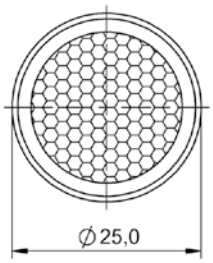

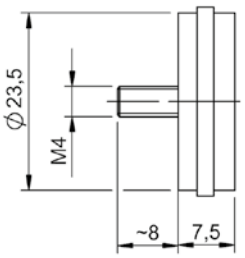

BAM01HC

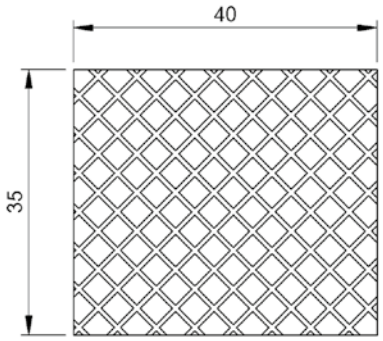

BAM0333

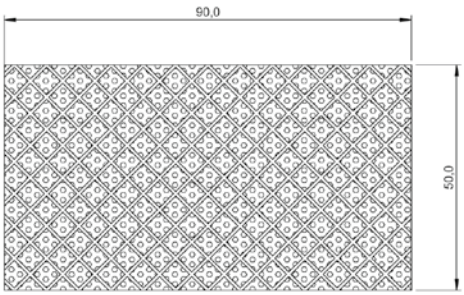

BAM00W6

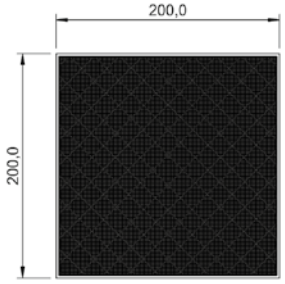

BAM00W9

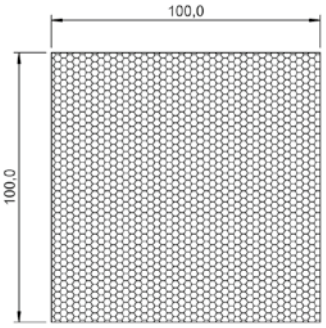

BAM01JM

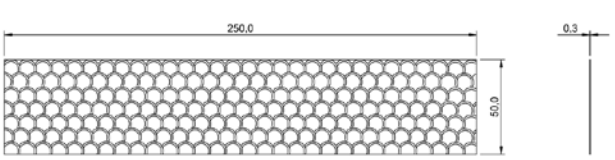

BAM00WC

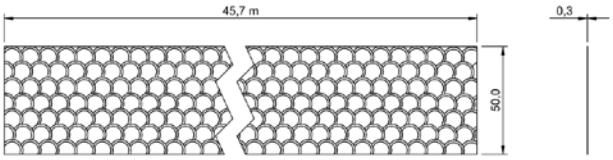

BAM00WE

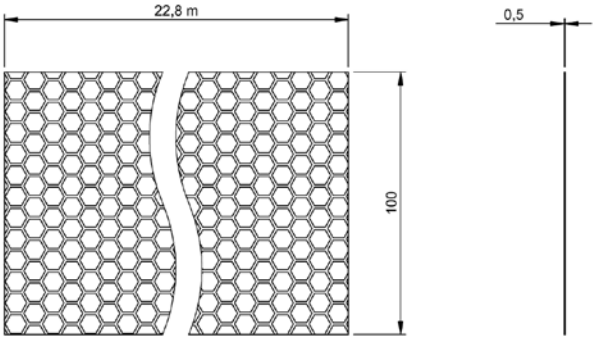

BAM02R3

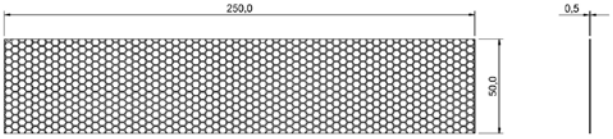

BAM00WF

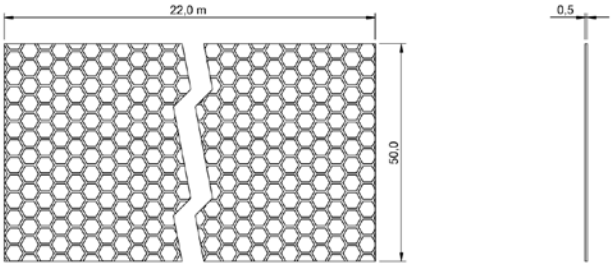

BAM00WH

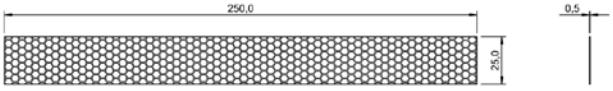

BAM00WJ

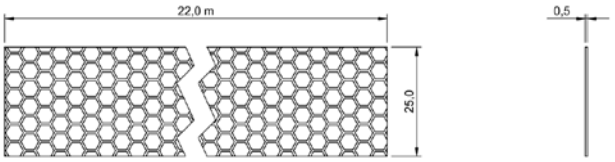

BAM00WK

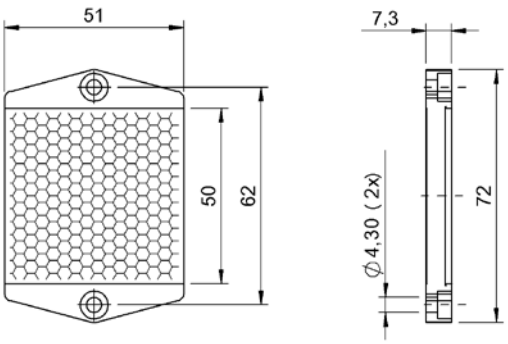

BAM0330

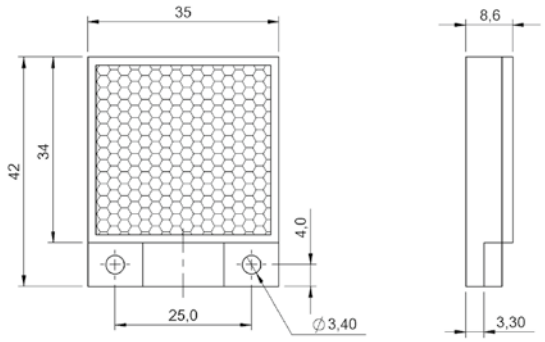

BAM0331

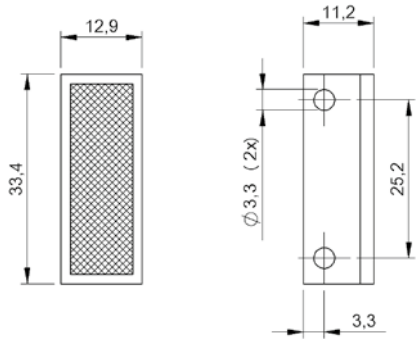

BAM0332

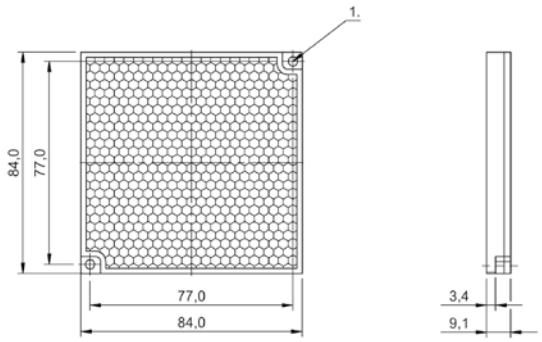

BAM00UL

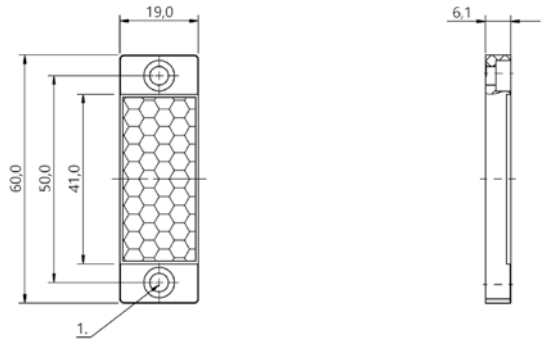

BAM00W7

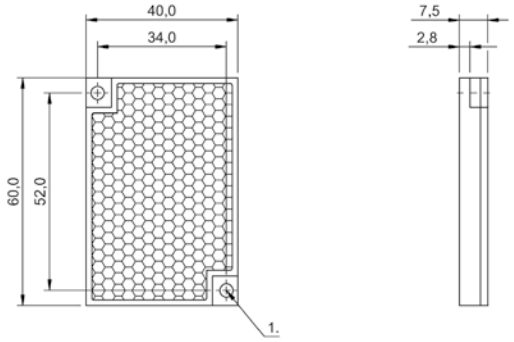

BAM00W8

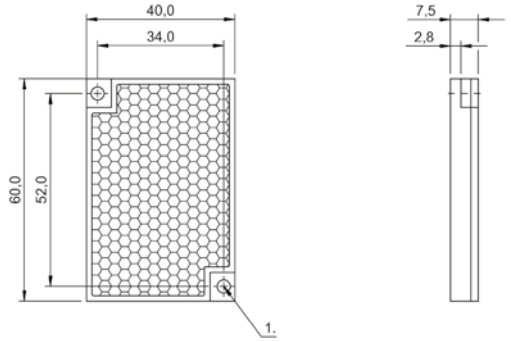

BAM01CM

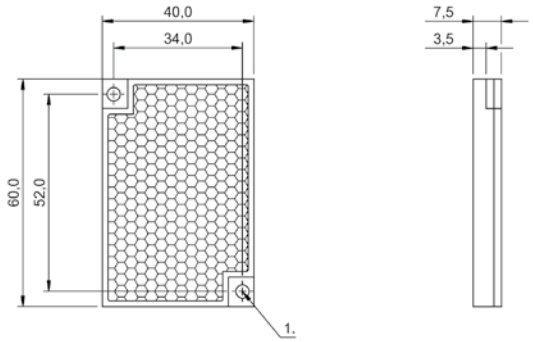

BAM01HE

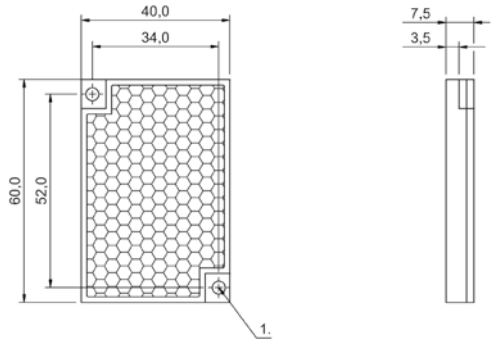

BAM01JP

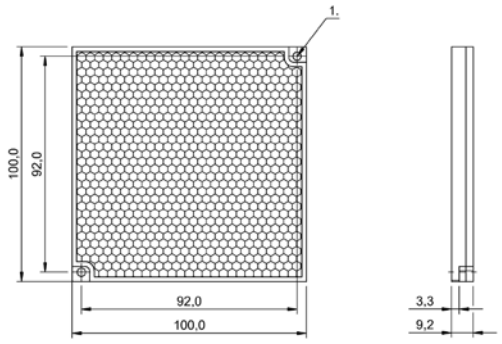

BAM01JN

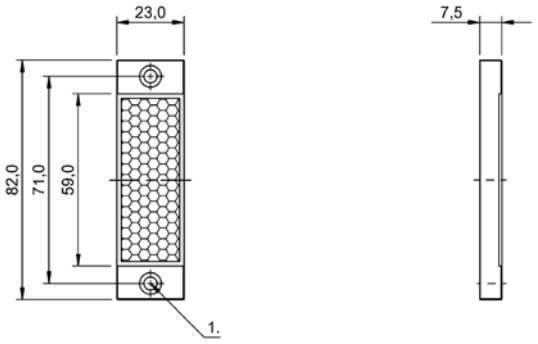

BAM01LA

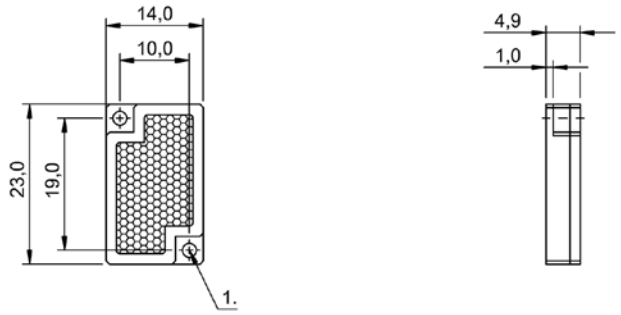

1) for M1.5

BAM01NH

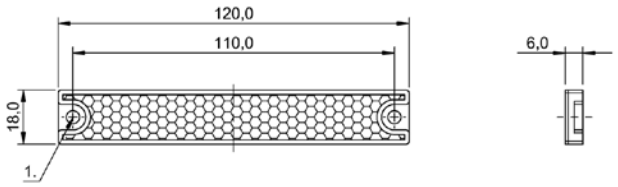

BAM00WA

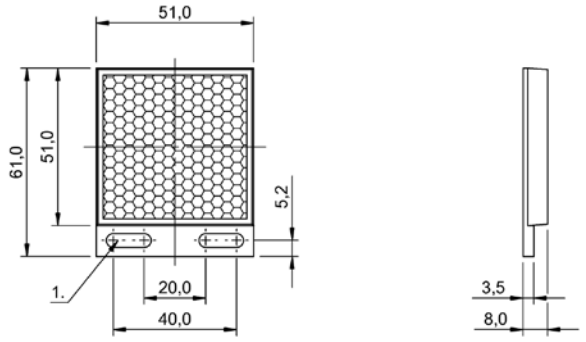

BAM00WL

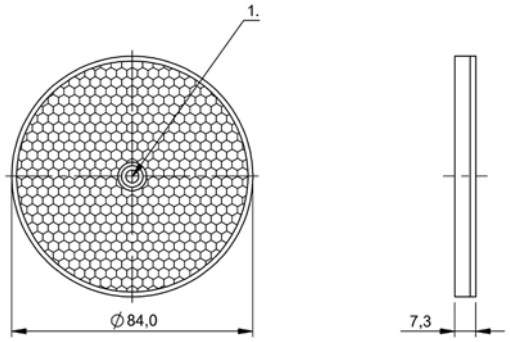

BAM00UK

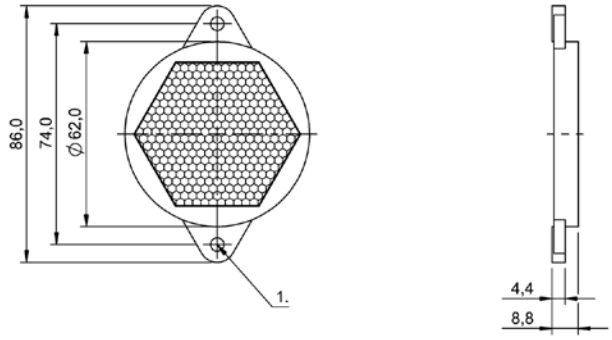

BAM0126

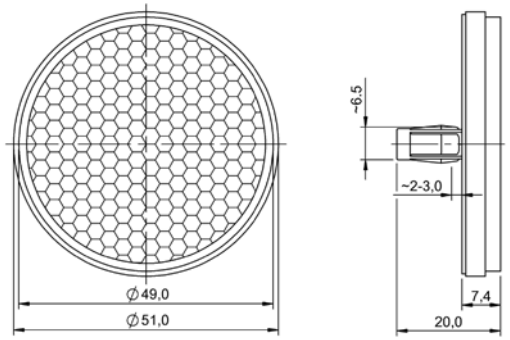

BAM00UP

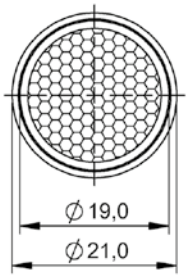

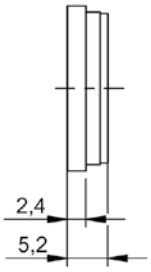

BAM00UR

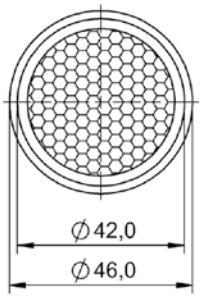

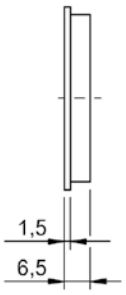

BAM00UW

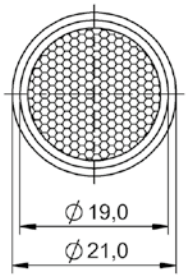

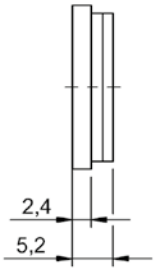

BAM00W4

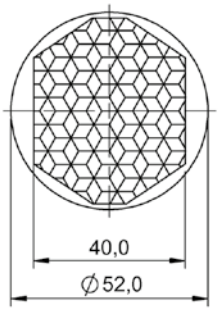

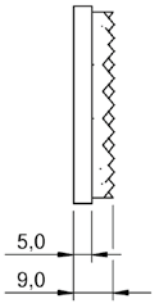

BAM01H6

	BAM00NM ADAPTER BFO 30-A1	BAM00P0 BFO 08,0-KB-1	BAM000J BFO D10-LA-DC-10	
Principle of operation	Fiber optics adapter	Clamp holder	Fiber optics adapter	
Version	Adapter ring	Mounting block	Clamping sleeve for Ø 1.0 mm	
Filter	—	—	—	
Use	for photoelectric fiber optics BFO 18V	for sensors Ø8 mm	for photoelectric fiber optics BFO D10	
Dimension	Ø 27.5 x 16.7 mm	16 x 20 x 12 mm	Ø 3.6 x 25 mm	
Material	—	—	—	
Material sensing surface	—	—	—	
Sensing surface	—	—	—	
Mounting	Cap nut M30x1.5	Screw M3	Clamps	
Focal length	—	—	—	
Minimum object distance (MOD)	—	—	—	
Productview	Page 372	Page 372	Page 372	

	BAM00P1 BFO D13-LA-EC-10	BFO005F BFO D22-LA-AC-20	BFO005J BFO D22-LA-BC-10	BFO005L BFO D22-LA-CC-30	BAM00PW BOS 12-BL-1
	Fiber optics adapter	Add-on lens	Add-on lens	Add-on lens	Aperture BOS
	Clamping sleeve for Ø 1.3 mm	Clamping sleeve with 90° lens	Clamp sleeve	Clamping sleeve with lens	Slit aperture set
	–	–	–	–	–
	for photoelectric fiber optics BFO D13-	for photoelectric fiber optics BFO	for photoelectric fiber optics BFO	for photoelectric fiber optics BFO	for photoelectric sensors BOS 12M
	Ø 4.2 x 25.5 mm	Ø 5 x 23.5 mm	Ø 5 x 21 mm	Ø 5 x 21.5 mm	Ø 9.4 x 0.2 mm
	–	–	–	–	–
	–	–	–	–	–
	–	Prism, cylindrical	–	convex, 1 aperture	Width 1.0/1.5/2.0 mm
	Clamps	Screws, clamps	Screws, clamps	Screws, clamps	Self-adhesive
	–	–	–	–	–
	–	–	–	–	–
	Page 372	Page 372	Page 372	Page 372	Page 372

	BAM00R6 BOS 18-BL-1	BAM00R7 BOS 18-BL-2	BAM00TU BOS 5-BL-1	
Principle of operation	Aperture BOS	Aperture BOS	Aperture BOS	
Version	Round aperture	Double slit aperture	Vertical slit aperture	
Filter	—	—	—	
Use	for photoelectric sensors BOS 18M	for photoelectric sensors BOS 18M	for photoelectric sensors BOS 5K	
Dimension	Ø 22 x 16 mm	Ø 22 x 85 mm	8.2 x 32.1 x 6.1 mm	
Material	—	—	—	
Material sensing surface	—	Glass	—	
Sensing surface	Ø 2 mm	Width 2.0 mm	Width 0.5 mm	
Mounting	Thread M18x1	Thread M18x1	Snap-on	
Focal length	—	—	—	
Minimum object distance (MOD)	—	—	—	
Productview	Page 373	Page 373	Page 373	

	BAM00TW BOS 5-BL-2	BAM00TY BOS 5-BL-3	BAM00TZ BOS 5-BL-4	BAM00U0 BOS 5-BL-5	BAM00U1 BOS 5-BL-6
	Aperture BOS	Aperture BOS	Aperture BOS	Aperture BOS	Aperture BOS
	Vertical slit aperture	Vertical slit aperture	Horizontal slit aperture	Horizontal slit aperture	Horizontal slit aperture
	–	–	–	–	–
	for photoelectric sensors BOS 5K	for photoelectric sensors BOS 5K	for photoelectric sensors BOS 5K	for photoelectric sensors BOS 5K	for photoelectric sensors BOS 5K
	8.2 x 32.1 x 6.1 mm	8.2 x 32.1 x 6.1 mm	8.2 x 32.1 x 6.1 mm	8.2 x 32.1 x 6.1 mm	8.2 x 32.1 x 6.1 mm
	–	–	–	–	–
	–	–	–	–	–
	Width 1.0 mm	Width 2.0 mm	Width 0.5 mm	Width 1.0 mm	Width 2.0 mm
	Snap-on	Snap-on	Snap-on	Snap-on	Snap-on
	–	–	–	–	–
	–	–	–	–	–
	Page 373	Page 373	Page 373	Page 373	Page 373

	BAM00U2 BOS 5-BL-7	BAM00U3 BOS 5-BL-8	BAM00U4 BOS 5-BL-9	
Principle of operation	Aperture BOS	Aperture BOS	Aperture BOS	
Version	Round aperture	Round aperture	Round aperture	
Filter	—	—	—	
Use	for photoelectric sensors BOS 5K	for photoelectric sensors BOS 5K	for photoelectric sensors BOS 5K	
Dimension	8.2 x 32.1 x 6.1 mm	8.2 x 32.1 x 6.1 mm	8.2 x 32.1 x 6.1 mm	
Material	—	—	—	
Material sensing surface	—	—	—	
Sensing surface	Ø 0.5 mm	Ø 1 mm	Ø 2 mm	
Mounting	Snap-on	Snap-on	Snap-on	
Focal length	—	—	—	
Minimum object distance (MOD)	—	—	—	
Productview	Page 374	Page 374	Page 374	

	BAM02PM BOS 6-BL-1	BAM029R BAM LS-VS-004-C2/3-0614-2	BAM02FA BAM LS-VS-004-C2/3-0814-2	BAM02FC BAM LS-VS-004-C2/3-1214-2	BAM02FE BAM LS-VS-004-C2/3-1614-2
	Aperture BOS	Camera lens	Camera lens	Camera lens	Camera lens
	Round aperture	C-Mount	C-Mount	C-Mount	C-Mount
	—	—	—	—	—
	for photoelectric sensors BOS 6K	for BVS SC-..	for BVS SC-..	for BVS SC-..	for BVS SC-..
	35 x 28 x 14.1 mm	Ø 32 x 43.4 mm	Ø 42 x 44 mm	Ø 29.5 x 53.7 mm	Ø 29.5 x 39.8 mm
	—	—	—	—	—
	—	Glass, polished	Glass, polished	Glass, polished	Glass, polished
	Ø 1 mm (2x)	—	—	—	—
	Oval holes 3.5 mm x 4.0 mm	Screws	Screws	Screws	Screws
	—	6 mm	8 mm	12 mm	16 mm
	—	100 mm	100 mm	100 mm	100 mm
	Page 374	Page 374	Page 374	Page 374	Page 374

	BAM02FF BAM LS-VS-004-C2/3-2514-2	BAM02FH BAM LS-VS-004-C2/3-3514-2	BAM02FJ BAM LS-VS-004-C2/3-5014-2	
Principle of operation	Camera lens	Camera lens	Camera lens	
Version	C-Mount	C-Mount	C-Mount	
Filter	—	—	—	
Use	for BVS SC-..	for BVS SC-..	for BVS SC-..	
Dimension	Ø 32 x 44.9 mm	Ø 29.5 x 41.4 mm	Ø 32 x 50.5 mm	
Material	—	Aluminum, black anodized	—	
Material sensing surface	Glass, polished	Glass, polished	Glass, polished	
Sensing surface	—	—	—	
Mounting	Screws	Screws	Screws	
Focal length	25 mm	35 mm	50 mm	
Minimum object distance (MOD)	100 mm	400 mm	300 mm	
Productview	Page 375	Page 375	Page 375	

	BAM02Y3 BAM LS-VS-004-C2/3-7532-2	BAM03H1 BAM LS-VS-008-C2/3-0528-5	BAM03H2 BAM LS-VS-008-C2/3-0814-5	BAM03H3 BAM LS-VS-008-C2/3-1214-5	BAM03H4 BAM LS-VS-008-C2/3-1614-5
	Camera lens	Camera lens	Camera lens	Camera lens	Camera lens
	C-Mount	C-Mount	C-Mount	C-Mount	C-Mount
	—	—	—	—	—
	for BVS SC-..	for industrial cameras BVS CA-.. <12 MP	for industrial cameras BVS CA-.. <12 MP	for industrial cameras BVS CA-.. <12 MP	for industrial cameras BVS CA-.. <12 MP
	Ø 34 x 63.6 mm	Ø 43 x 45.8 mm	Ø 33 x 50.1 mm	Ø 33 x 42.7 mm	Ø 33 x 41.4 mm
	Aluminum, black anodized	—	—	—	—
	Glass, polished	Glass, polished	Glass, polished	Glass, polished	Glass, polished
	—	—	—	—	—
	Screws	—	—	—	—
	75 mm	5 mm	8 mm	12 mm	16 mm
	700 mm	100 mm	100 mm	150 mm	200 mm
	Page 375	Page 375	Page 375	Page 375	Page 375

	BAM03H5 BAM LS-VS-008-C2/3-2514-5	BAM03H6 BAM LS-VS-008-C2/3-3520-5	BAM03H7 BAM LS-VS-008-C2/3-5028-5	
Principle of operation	Camera lens	Camera lens	Camera lens	
Version	C-Mount	C-Mount	C-Mount	
Filter	—	—	—	
Use	for industrial cameras BVS CA-.. <12 MP	for industrial cameras BVS CA-.. <12 MP	for industrial cameras BVS CA-.. <12 MP	
Dimension	Ø 33 x 47 mm	Ø 33 x 42.8 mm	Ø 33 x 60.2 mm	
Material	—	—	—	
Material sensing surface	Glass, polished	Glass, polished	Glass, polished	
Sensing surface	—	—	—	
Mounting	—	—	—	
Focal length	25 mm	35 mm	50 mm	
Minimum object distance (MOD)	200 mm	200 mm	200 mm	
Productview	Page 376	Page 376	Page 376	

	BAM03MN BAM LS-VS-009-C1/1-0625-0	BAM03MP BAM LS-VS-009-C1/1-0825-0	BAM03MR BAM LS-VS-009-C1/1-1218-0	BAM03MT BAM LS-VS-009-C1/1-1618-0	BAM03MU BAM LS-VS-009-C1/1-2518-0
	Camera lens	Camera lens	Camera lens	Camera lens	Camera lens
	C-Mount	C-Mount	C-Mount	C-Mount	C-Mount
	–	–	–	–	–
	for industrial cameras BVS CA-.. <12 MP	for industrial cameras BVS CA-.. 12 MP	for industrial cameras BVS CA-.. <12 MP	for industrial cameras BVS CA-.. 12 MP	for industrial cameras BVS CA-.. 12 MP
	Ø 84 x 79.1 mm	Ø 64 x 73.3 mm	Ø 51 x 73.8 mm	Ø 43 x 65.7 mm	Ø 43 x 69.4 mm
	Aluminum, black anodized	Aluminum, black anodized	Aluminum, black anodized	Aluminum, black anodized	Aluminum, black anodized
	Glass, polished	Glass, polished	Glass, polished	Glass, polished	Glass, polished
	–	–	–	–	–
	Screws	Screws	Screws	Screws	Screws
	6.5 mm	8.5 mm	12 mm	16 mm	25 mm
	100 mm	100 mm	100 mm	100 mm	100 mm
	Page 376	Page 376	Page 376	Page 376	Page 376

	BAM03MW BAM LS-VS-009-C1/1-3518-0	BAM03MY BAM LS-VS-009-C1/1-5018-0	BAM02MT BAM SP-XO-002-0,5-40-31-A	
Principle of operation	Camera lens	Camera lens	Spacer ring, piece	
Version	C-Mount	C-Mount	C-Mount	
Filter	—	—	—	
Use	for industrial cameras BVS CA-.. <12 MP	for industrial cameras BVS CA-.. 12 MP	for C-mount camera lenses	
Dimension	Ø 45 x 66 mm	Ø 45 x 74.5 mm	Ø 31 x 40 mm	
Material	Aluminum, black anodized	Aluminum, black anodized	—	
Material sensing surface	Glass, polished	Glass, polished	—	
Sensing surface	—	—	—	
Mounting	Screws	Screws	—	
Focal length	35 mm	50 mm	—	
Minimum object distance (MOD)	200 mm	200 mm	—	
Productview	Page 377	Page 377	Page 377	

	BAM01A7 BAM OF-VS-001-D-RX100	BAM02FR BAM OF-VS-002-BU-27	BAM02FZ BAM OF-VS-002-BU-30	BAM02FP BAM OF-VS-002-GN-27	BAM02FY BAM OF-VS-002-GN-30
	Optical filter BVS	Optical filter BVS	Optical filter BVS	Optical filter BVS	Optical filter BVS
	Diffusing plate, 1 aperture	Spectral filter	Spectral filter	Spectral filter	Spectral filter
	–	Blue	Blue	Green	Green
	for vision lighting ring light	for C-mount camera lenses	for C-mount camera lenses	for C-mount camera lenses	for C-mount camera lenses
	Ø 116 x 8 mm	Ø 29 x 6.5 mm	Ø 32 x 7 mm	Ø 29 x 6.5 mm	Ø 32 x 7 mm
	–	–	–	–	–
	Glass	Glass, polished	Glass, polished	Glass, polished	Glass, polished
	Ring Ø 104/Ø 64 mm	–	–	–	–
	Screw M1.6	Screws	Screws	Screws	Screws
	–	–	–	–	–
	–	–	–	–	–
	Page 377	Page 377	Page 377	Page 377	Page 377

	BAM02MN BAM OF-VS-002-IR-27	BAM02MP BAM OF-VS-002-IR-30	BAM02MR BAM OF-VS-002-IR-40	
Principle of operation	Optical filter BVS	Optical filter BVS	Optical filter BVS	
Version	Spectral filter	Spectral filter	Spectral filter	
Filter	Infrared	Infrared	Infrared	
Use	for C-mount camera lenses	for C-mount camera lenses	for C-mount camera lenses	
Dimension	Ø 29 x 6.5 mm	Ø 32 x 7 mm	Ø 42 x 7 mm	
Material	—	—	—	
Material sensing surface	Glass, polished	Glass, polished	Glass, polished	
Sensing surface	—	—	—	
Mounting	Screws	Screws	Screws	
Focal length	—	—	—	
Minimum object distance (MOD)	—	—	—	
Productview	Page 377	Page 377	Page 377	

	BAM02FK BAM OF-VS-002-PL-27	BAM02FT BAM OF-VS-002-PL-30	BAM02H0 BAM OF-VS-002-PL-40	BAM02FM BAM OF-VS-002-RD-27	BAM02FW BAM OF-VS-002-RD-30
	Optical filter BVS	Optical filter BVS	Optical filter BVS	Optical filter BVS	Optical filter BVS
	Spectral filter	Spectral filter	Spectral filter	Spectral filter	Spectral filter
	polarized	polarized	polarized	Red	Red
	for C-mount camera lenses	for C-mount camera lenses	for C-mount camera lenses	for C-mount camera lenses	for C-mount camera lenses
	Ø 29 x 9.5 mm	Ø 32 x 10 mm	Ø 42 x 10 mm	Ø 29 x 6.5 mm	Ø 32 x 7 mm
	–	–	–	–	–
	Glass, polished	Glass, polished	Glass, polished	Glass, polished	Glass, polished
	–	–	–	–	–
	Screws	Screws	Screws	Screws	Screws
	–	–	–	–	–
	–	–	–	–	–
	Page 377	Page 378	Page 378	Page 377	Page 377

	BAM02FL BAM OF-VS-002-UV-27	BAM02FU BAM OF-VS-002-UV-30	BAM02H1 BAM OF-VS-002-UV-40	
Principle of operation	Optical filter BVS	Optical filter BVS	Optical filter BVS	
Version	Spectral filter	Spectral filter	Spectral filter	
Filter	Ultraviolet	Ultraviolet	Ultraviolet	
Use	for C-mount camera lenses	for C-mount camera lenses	for C-mount camera lenses	
Dimension	Ø 29 x 6.5 mm	Ø 32 x 7 mm	Ø 42 x 7 mm	
Material	—	—	—	
Material sensing surface	Glass, polished	Glass, polished	Glass, polished	
Sensing surface	—	—	—	
Mounting	Screws	Screws	Screws	
Focal length	—	—	—	
Minimum object distance (MOD)	—	—	—	
Productview	Page 377	Page 377	Page 377	

	BAM02FN BAM 0F-VS-002-YE-27	**BAM01U2** BAM LS-FO-002-F	**BAM020P** BAM LS-FO-003-M6-L	**BAM030N** BAM LS-FO-005-U1-22	**BAM00NN** BFO 02-PK-1
	Optical filter BVS	Adjustable optics module	Lens	Lens	Lens
	Spectral filter	Optics	Add-on lens	Add-on lens	Add-on lens
	Yellow	—	—	—	—
	for C-mount camera lenses	for fibre optics BFO M6	for photoelectric color sensors BFS 33M-GSS-...	for photoelectric color sensors BFS 33M-GSS-..., for BFO00H8, for BFB-...	for photoelectric fiber optics BFO
	Ø 29 x 6.5 mm	Ø 19 x 38 mm	Ø 28.2 x 38.9 mm	Ø 18 x 44.9 mm	Ø 4 x 11.2 mm
	—	—	—	Aluminum anodized, black	—
	Glass, polished	Glass, anti-glare	Glass	Glass	Glass
	—	convex, 1 aperture	convex, 1 aperture	—	convex, 1 aperture
	Screws	Thread M18x1	Thread M12x1	Thread M18x1	Threads M2.6x0.45
	—	—	—	—	—
	—	—	—	—	—
	Page 377	Page 378	Page 378	Page 378	Page 378

	BAM00NR BFO 04-FL-1	BAM00NT BFO 04-FL-2	BAM00NW BFO 04-PK-1	
Principle of operation	Lens	Lens	Lens	
Version	Add-on lens	Add-on lens	Add-on lens	
Filter	—	—	—	
Use	for fibre optics BFO M4	for photoelectric color sensors BFS 33M-GSS-..., for BFB-...	for photoelectric fiber optics BFO	
Dimension	Ø 6.5 x 12 mm	Ø 6.5 x 15 mm	Ø 7 x 10.5 mm	
Material	—	—	—	
Material sensing surface	Glass	Glass	Glass	
Sensing surface	convex, 1 aperture	convex, 1 aperture	convex, 1 aperture	
Mounting	M4 thread	M4 thread	M4 thread	
Focal length	—	—	—	
Minimum object distance (MOD)	—	—	—	
Productview	Page 378	Page 378	Page 379	

	BAM0120 BKT M-PK-1	BAM0121 BKT M-PK-2	BAM0122 BKT M-PK-3	BAM00P2 BKT M-PK-4	BAM00P3 BKT M-PK-5
	Lens	Lens	Lens	Lens	Lens
	Add-on lens f= 18 mm	Add-on lens f= 9 mm	Add-on lens f= 28 mm	Intermediate ring with lens	Add-on lens f= 50 mm
	–	–	–	–	–
	for photoelectric luminescence sensors BLT, for photoelectric contrast sensors BKT, for photoelectric contrast sensors BKT 67M	for photoelectric contrast sensors BKT, for photoelectric contrast sensors BKT 67M	for photoelectric contrast sensors BKT, for photoelectric contrast sensors BKT 67M	for photoelectric contrast sensors BKT, for photoelectric contrast sensors BKT 67M	for photoelectric contrast sensors BKT, for photoelectric contrast sensors BKT 67M
	Ø 25 x 11 mm	Ø 25 x 8.5 mm	Ø 33 x 48.5 mm	Ø 25 x 15.5 mm	Ø 32 x 25 mm
	–	–	–	–	–
	Glass	Glass	Glass	Glass	Glass
	convex, 1 aperture	convex, 1 aperture	convex, 1 aperture	convex, 1 aperture	convex, 1 aperture
	Thread M20x0.7	Thread M20x0.7	Thread M20x0.7	Thread M20x0.7	Thread M20x0.7
	–	–	–	–	–
	–	–	–	–	–
	Page 379	Page 379	Page 379	Page 379	Page 379

	BAM00NP BFO 02-UK-1	BAM00R0 BOS 12-WS-1	BAM00R1 BOS 12-WS-2	
Principle of operation	Beam deflector BFO	Beam deflector BFO	Beam deflector BFO	
Version	90° lens, 1 mirror in housing	90° lens, 1 open mirror	90° lens, 1 open mirror	
Filter	—	—	—	
Use	for photoelectric fiber optics BFO	for photoelectric sensors BOS 12M	for photoelectric sensors BOS 12M, for photoelectric sensors BOS 12M	
Dimension	Ø 4 x 4 mm	16 x 35 x 24 mm	16 x 35 x 24 mm	
Material	—	—	—	
Material sensing surface	Glass	PET, coated Al	Glass, coated Al	
Sensing surface	Prism, cylindrical	Mirror surface	Mirror surface	
Mounting	Threads M2.6x0.45	Nut M12x1	Nut M12x1	
Focal length	—	—	—	
Minimum object distance (MOD)	—	—	—	
Productview	Page 379	Page 379	Page 380	

	BAM00RP BOS 18-UK-1	BAM00RR BOS 18-UK-10	BAM00RT BOS 18-UK-2	BAM00RU BOS 18-WS-1	BAM01ET BAM AP-US-001-M12-0
	Beam deflector BFO	Beam deflector BFO	Beam deflector BFO	Beam deflector BFO	Focusing attachment BUS
	90° lens, 2 mirrors in housing	90° lens, 1 mirror in housing	90° lens, 2 mirrors in housing	90° lens, 1 open mirror	Focusing attachment
	–	–	–	–	–
	for photoelectric sensors BOS 18M	for photoelectric sensors BOS 18K, for photoelectric sensors BOS 18M	for photoelectric sensors BOS 18M	for photoelectric sensors BOS 18M, for photoelectric sensors BOS 18K	for ultrasonic sensors BUS
	Ø 23.5 x 23.5 mm	Ø 23.5 x 23.5 mm	Ø 23.5 x 23.5 mm	22 x 42 x 30 mm	Ø 17 x 40 mm
	–	–	–	–	–
	PMMA	Glass, coated Al	PMMA	PET, coated Al	–
	Double lens, flat on outside	Mirror surface	Front pane	Mirror surface	Ø 5 mm
	Thread M18x1	Thread M18x1	Thread M18x1	Nut M18x1	Thread M12x1
	–	–	–	–	–
	–	–	–	–	–
	Page 380	Page 380	Page 380	Page 380	Page 380

	BAM01YU BAM AP-US-004-R06-Y	BAM01HJ BAM AP-US-002-M18-0	BAM01EP BAM BD-US-001-D20-4	
Principle of operation	Focusing attachment BUS	—	Beam deflector BUS	
Version	Focusing attachment	Focusing attachment	90° deflector, open	
Filter	—	—	—	
Use	for ultrasonic sensors BUS	for ultrasonic sensors BUS	for ultrasonic sensors BUS	
Dimension	12 x 18.4 x 28.1 mm	Ø 25 x 80 mm	50 x 105 x 50 mm	
Material	—	—	—	
Material sensing surface	—	—	—	
Sensing surface	Ø 3 mm	Ø 11 mm	Deflection surface	
Mounting	Adhesive	Thread M18x1	Nut M18x1, Screw M5	
Focal length	—	—	—	
Minimum object distance (MOD)	—	—	—	
Productview	Page 380	Page 380	Page 381	

	BAM01ER BAM BD-US-001-D32-4				
	Beam deflector BUS				
	90° deflector, open				
	–				
	for ultrasonic sensors BUS				
	50 x 105 x 50 mm				
	–				
	–				
	Deflection surface				
	Nut M30x1.5, Screw M5				
	–				
	–				
	Page 381				

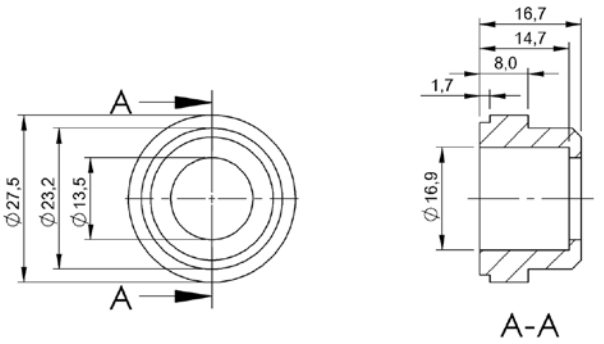

BAM00NM

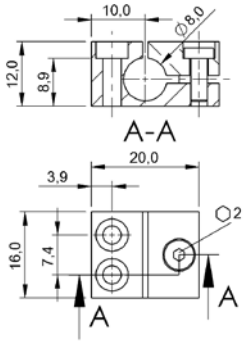

BAM00P0

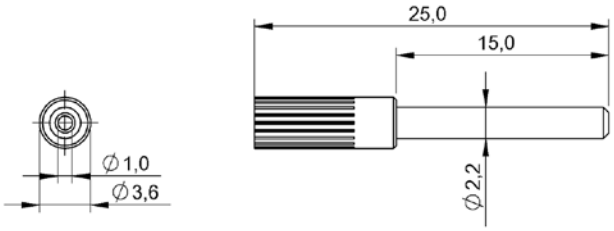

BAM000J

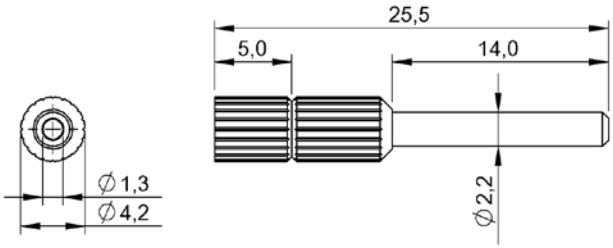

BAM00P1

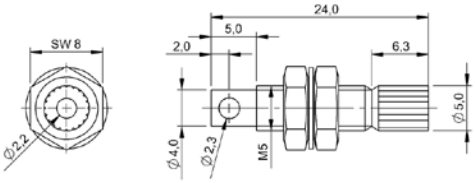

BFO005F

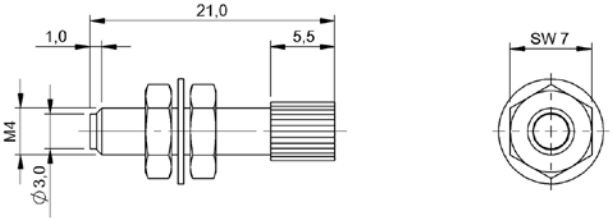

BFO005J

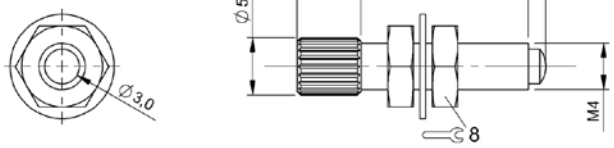

BFO005L

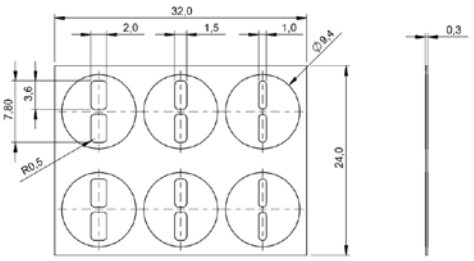

BAM00PW

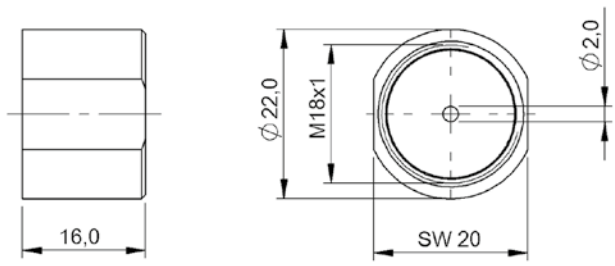

BAM00R6

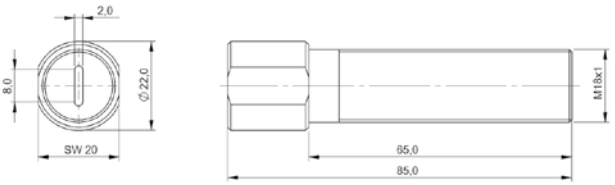

BAM00R7

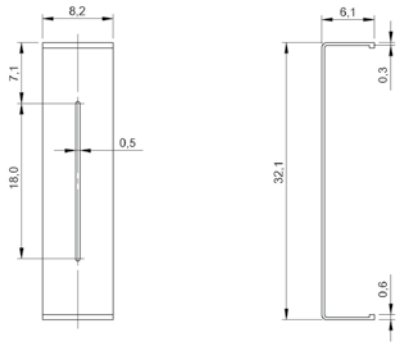

BAM00TU

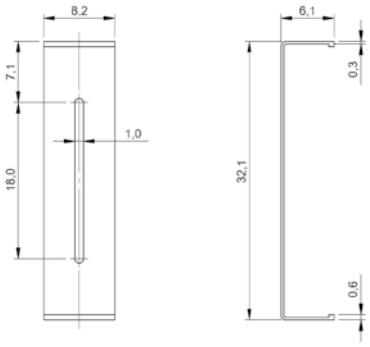

BAM00TW

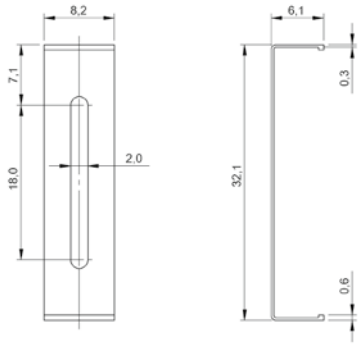

BAM00TY

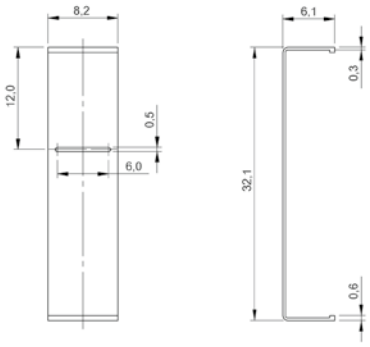

BAM00TZ

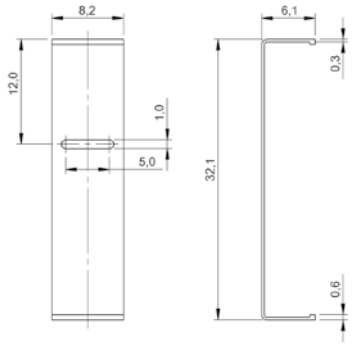

BAM00U0

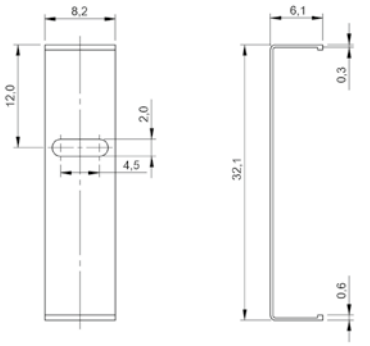

BAM00U1

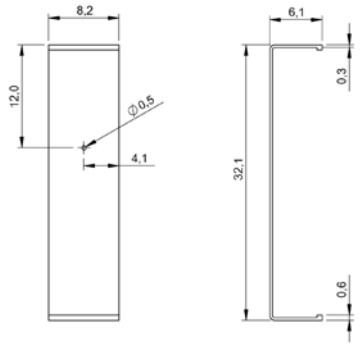

BAM00U2

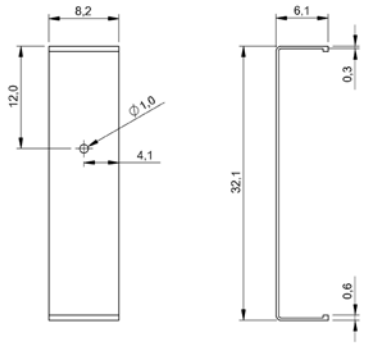

BAM00U3

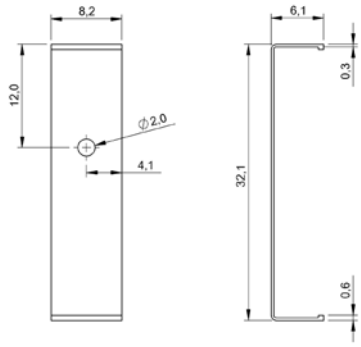

BAM00U4

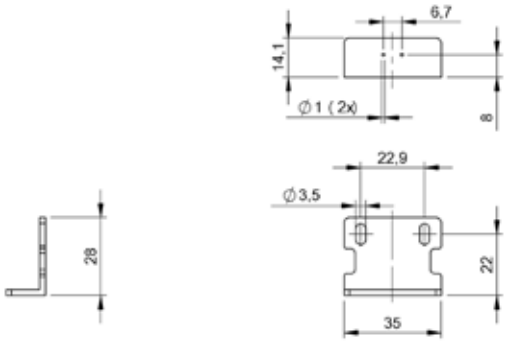

BAM02PM

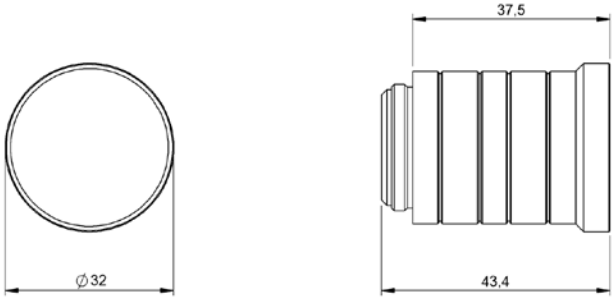

BAM029R

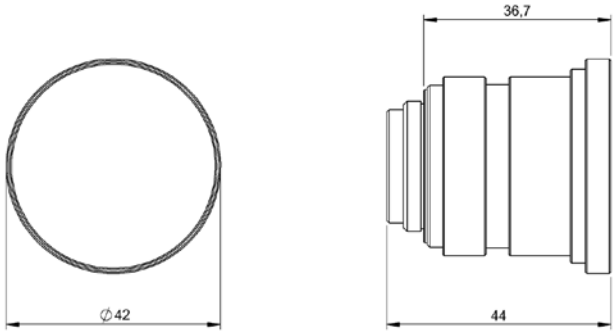

BAM02FA

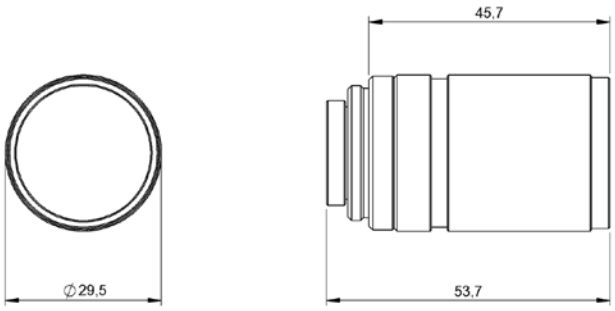

BAM02FC

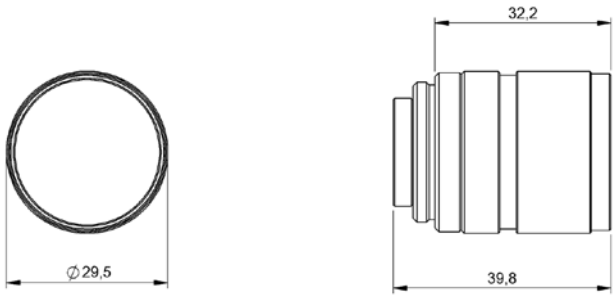

BAM02FE

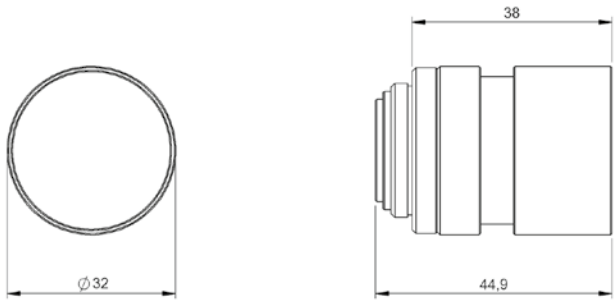

BAM02FF

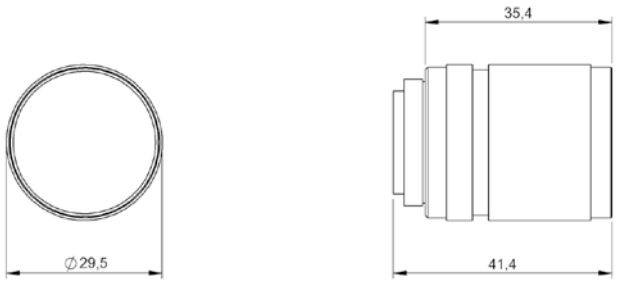

BAM02FH

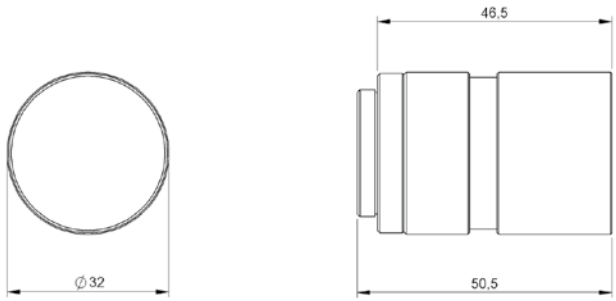

BAM02FJ

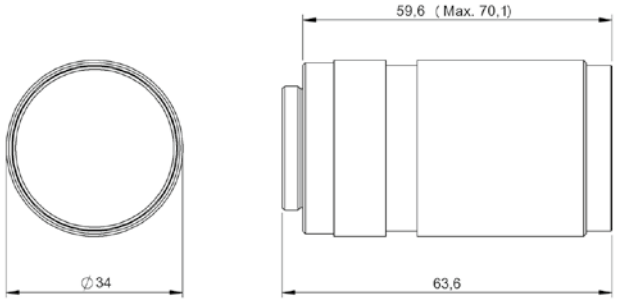

BAM02Y3

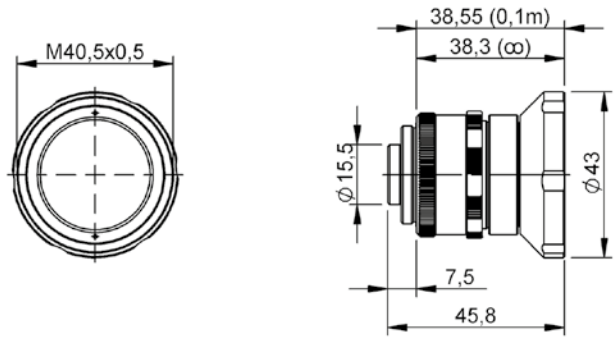

BAM03H1

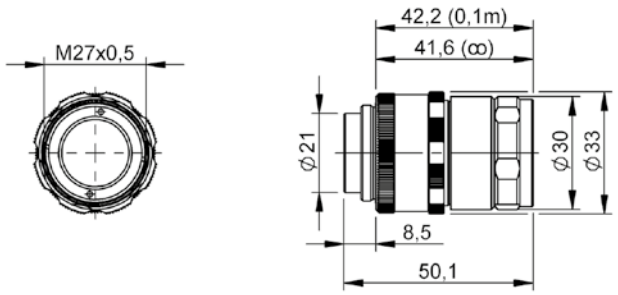

BAM03H2

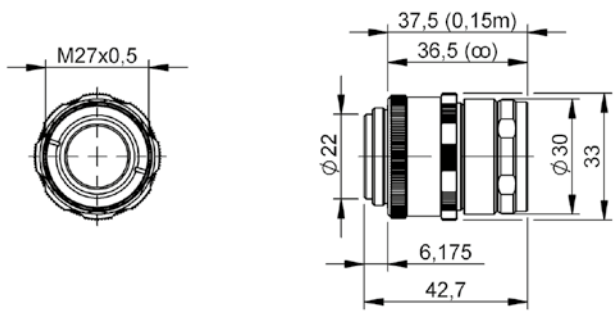

BAM03H3

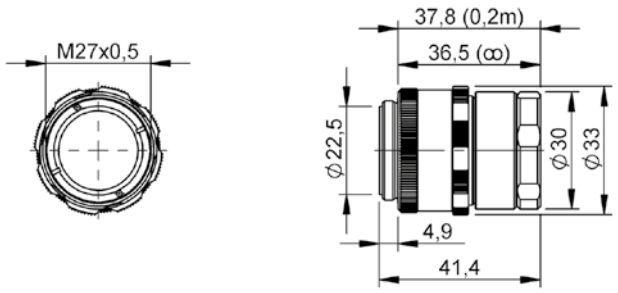

BAM03H4

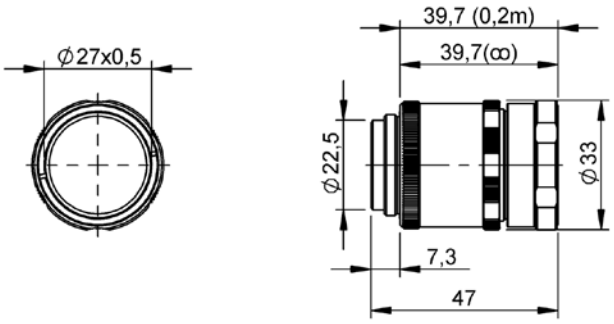

BAM03H5

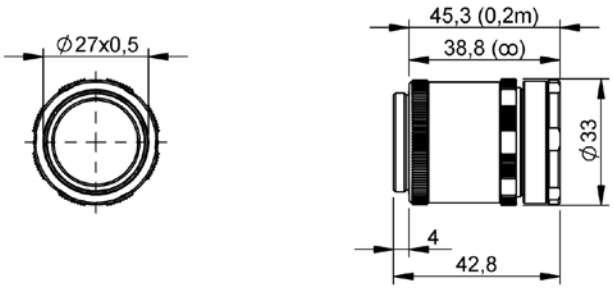

BAM03H6

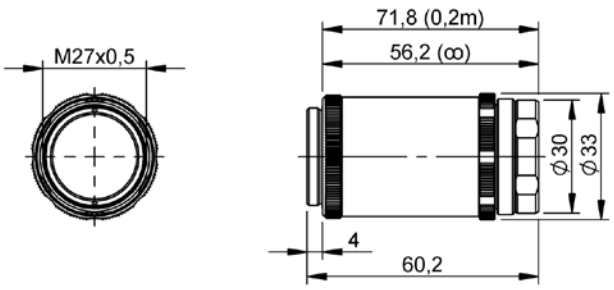

BAM03H7

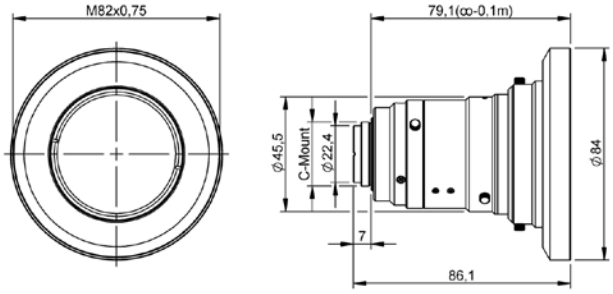

BAM03MN

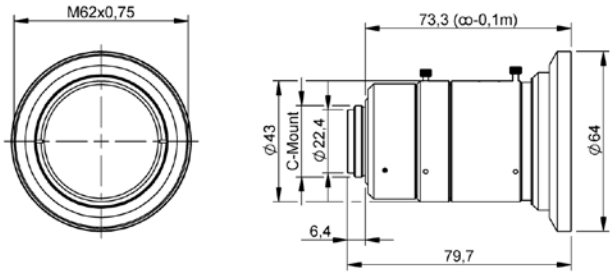

BAM03MP

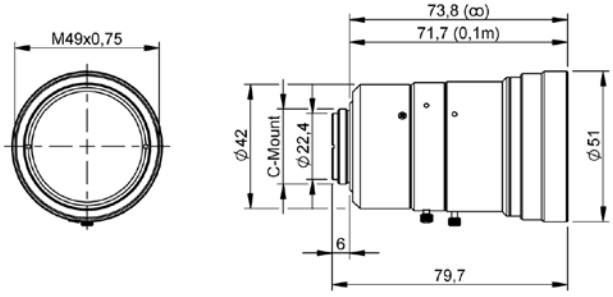

BAM03MR

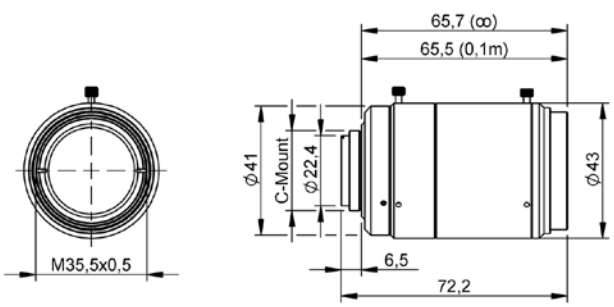

BAM03MT

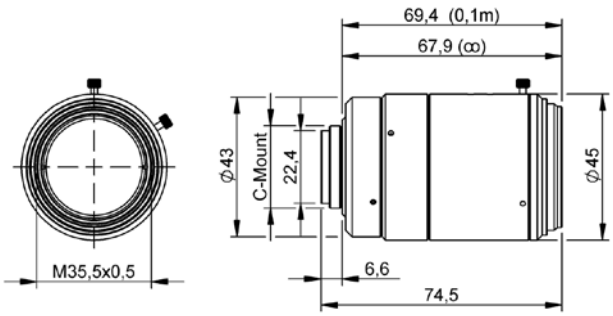

BAM03MU

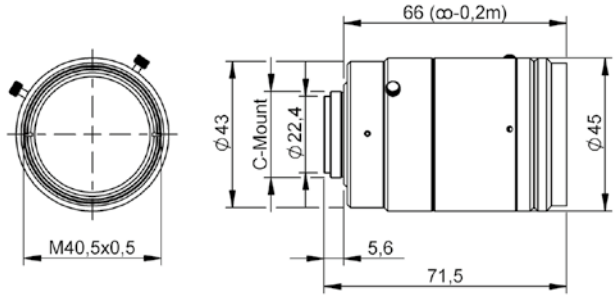

BAM03MW

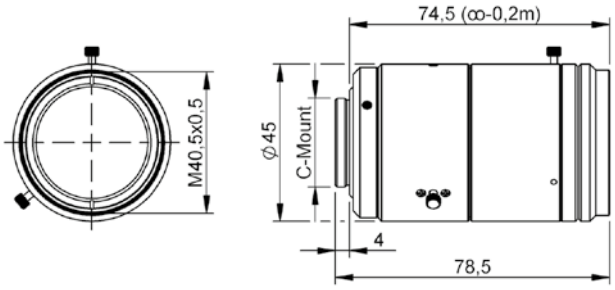

BAM03MY

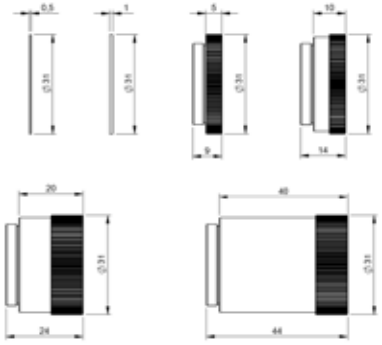

BAM02MT

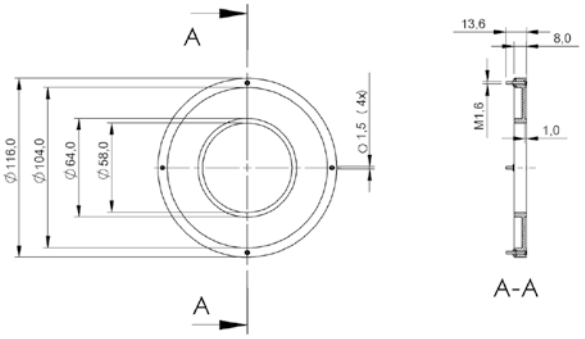

BAM01A7

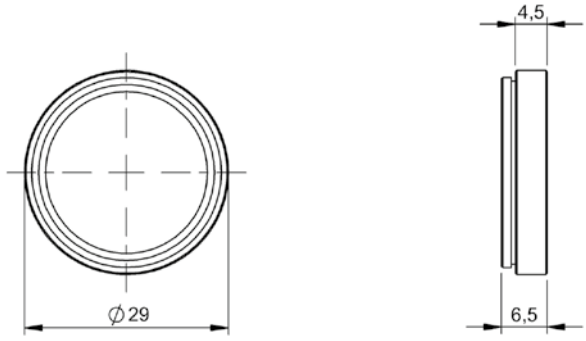

BAM02FR, BAM02FP, BAM02MN, BAM02FM, BAM02FL, BAM02FN

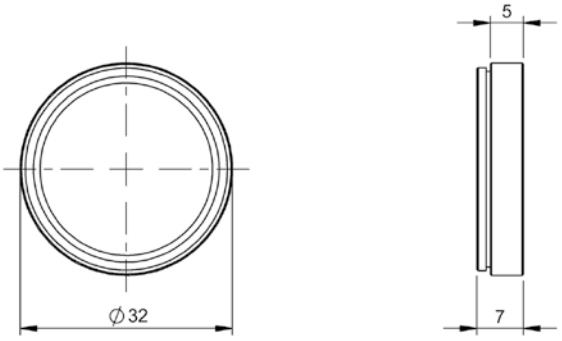

BAM02FZ, BAM02FY, BAM02MP, BAM02FW, BAM02FU

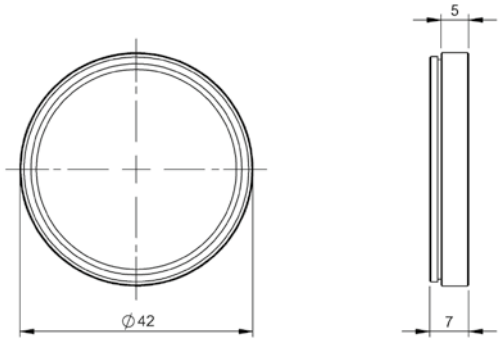

BAM02MR, BAM02H1

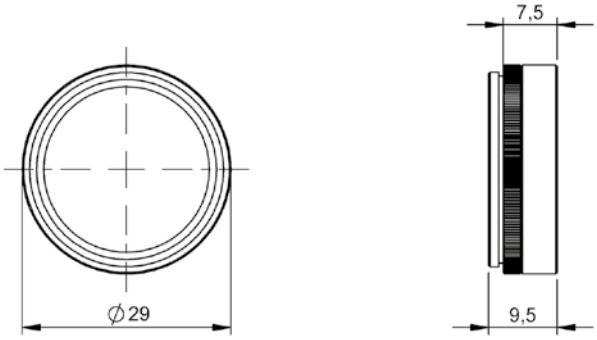

BAM02FK

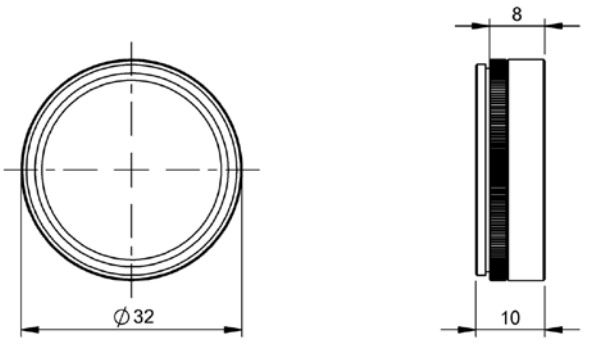

BAM02FT

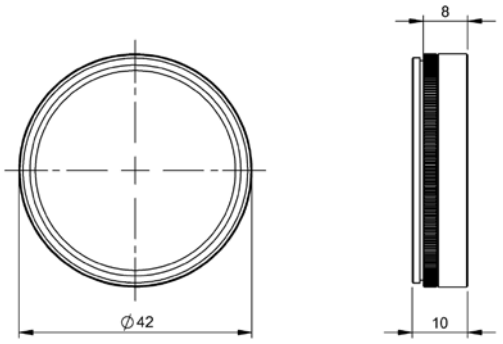

BAM02H0

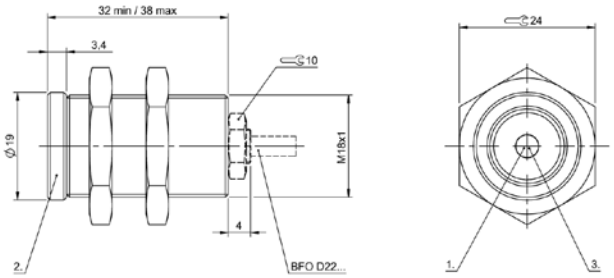

1) Receiver, 2) Knurl, 3) Emitter

BAM01U2

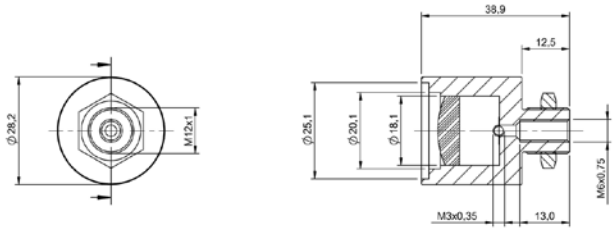

BAM020P

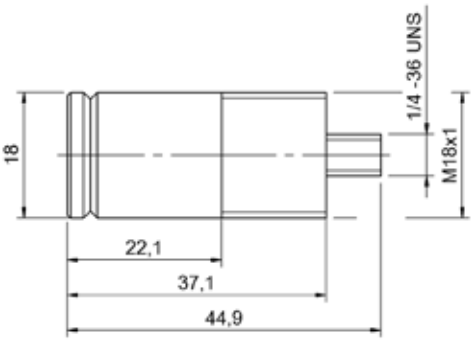

BAM030N

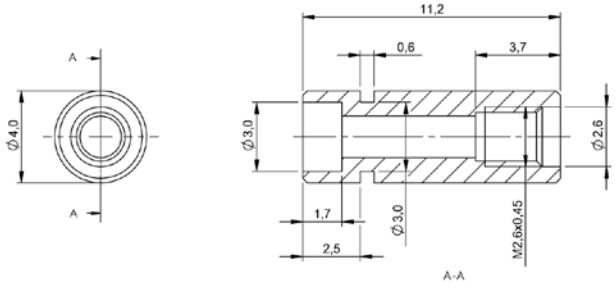

BAM00NN

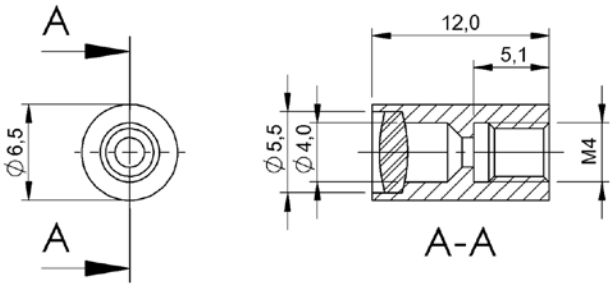

BAM00NR

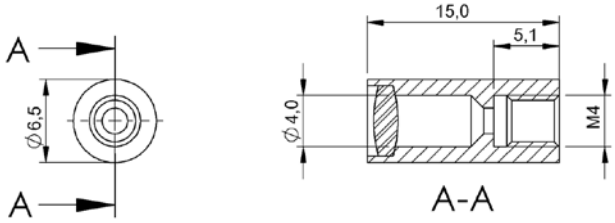

BAM00NT

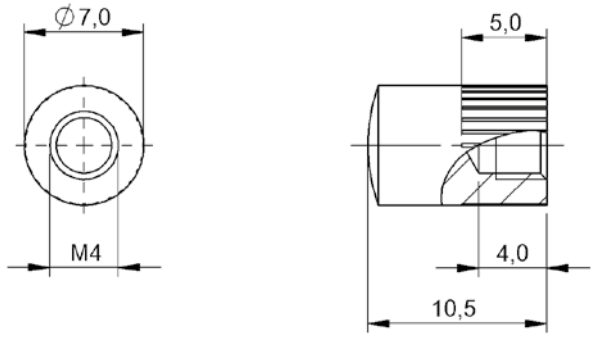

BAM00NW

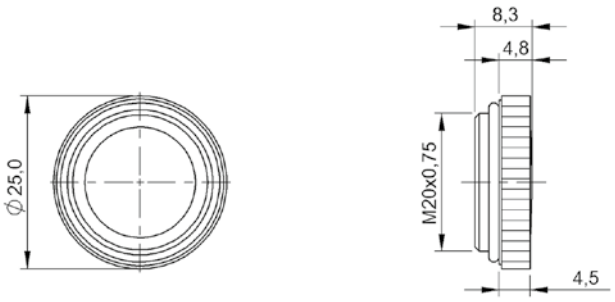

BAM0120

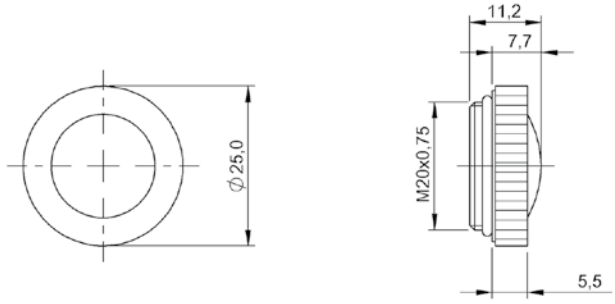

BAM0121

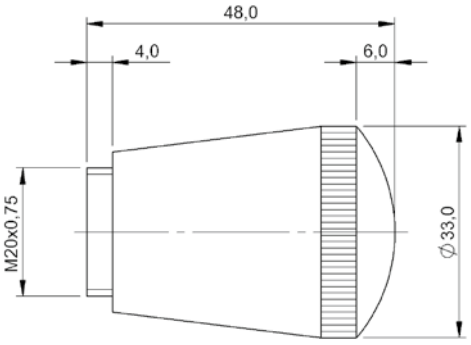

BAM0122

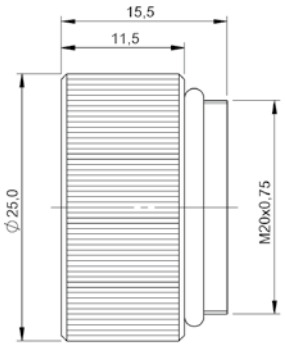

BAM00P2

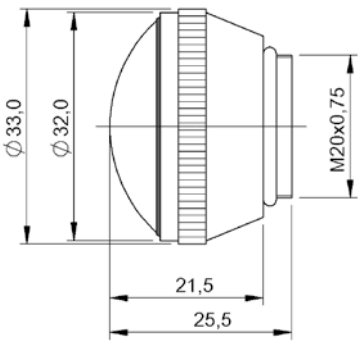

BAM00P3

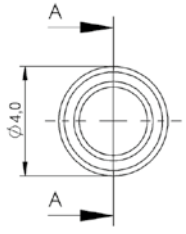

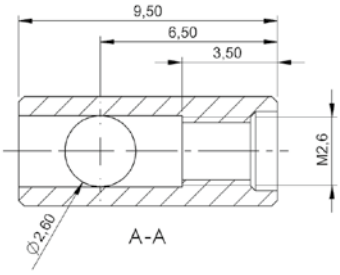

BAM00NP

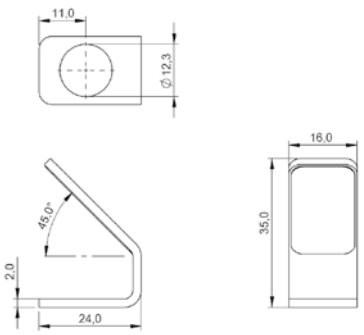

BAM00R0

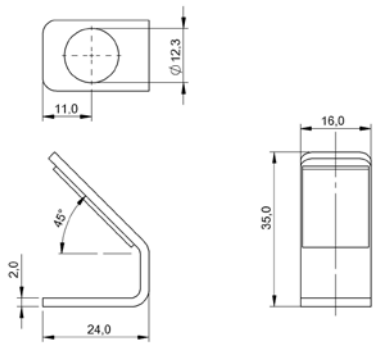

BAM00R1

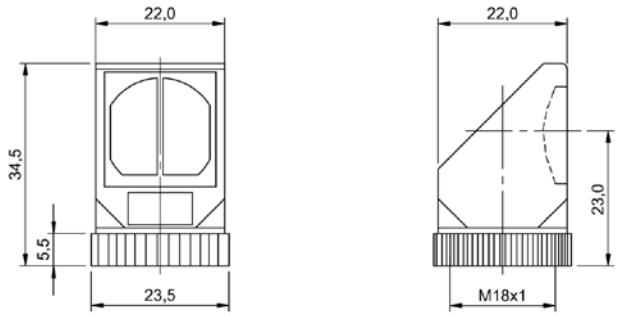

BAM00RP

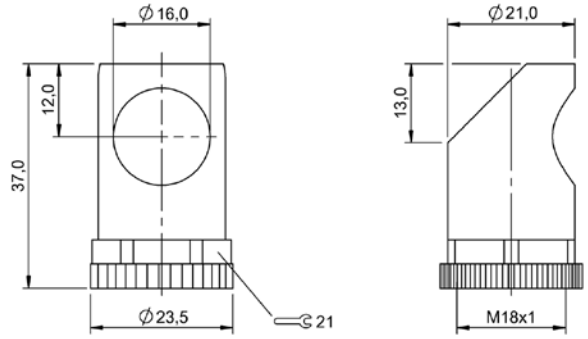

BAM00RR

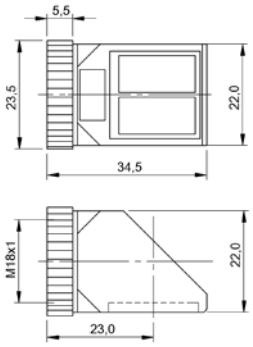

BAM00RT

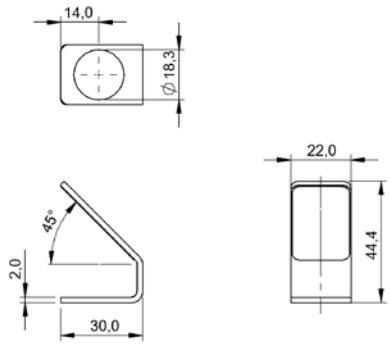

BAM00RU

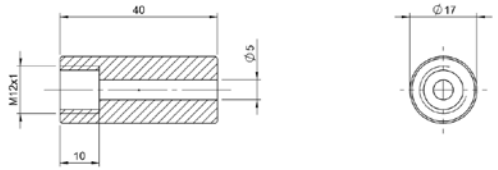

BAM01ET

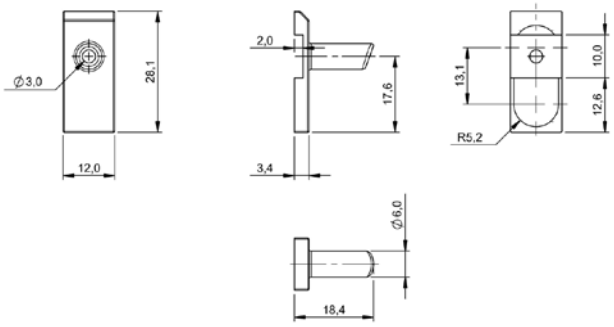

BAM01YU

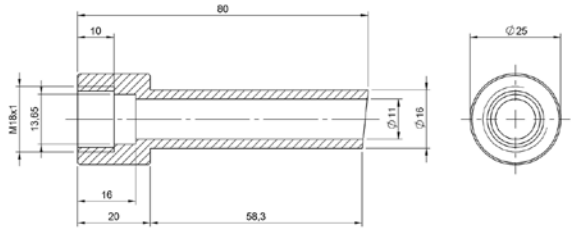

BAM01HJ

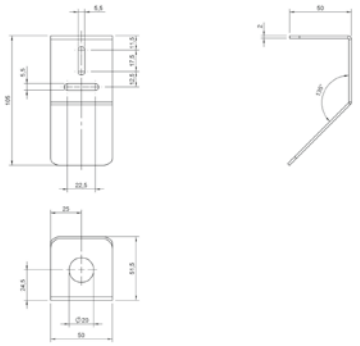

BAM01EP

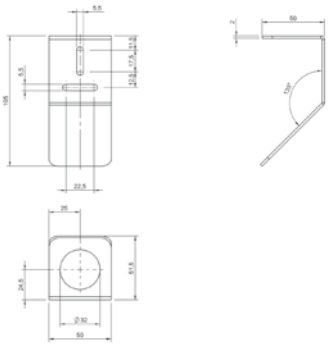

BAM01ER

Mechanical protection for sensors and devices

MECHANICAL PROTECTION

Our protective caps, protective housings, protective covers, protective tubes and sabotage protection prevent any mechanical damage to the sensor or a device.

Select from different versions – even for sophisticated applications.

The most important benefits

- High-quality and long service life
- Simple to install
- Compatibility

	BAM0183 BKS-PW-26/20-SI-TR-03,5	BAM0182 BKS-PW-51/30-SI-TR-11	BAM021E BAM PT-XA-005-260-T-R20	
Short description	Silicone strip	Silicone strip	Silicone strip	
Use	for cable guard, for weld protection	for cable guard, for weld protection	for cable guard, for weld protection	
Material	Silicone 60 white, trans-lucent	Silicone 60 white, trans-lucent	Silicone 60 white, trans-lucent	
Dimension	1.6 x 26 x 3658 mm	1.6 x 51 x 10970 mm	1.6 x 26 x 20000 mm	
Ambient temperature	-65...260 °C	-65...260 °C	-40...180 °C	
Productview	Page 388	Page 388	Page 388	

	BAM01R2 BAM PT-XA-002-127-2-30	BAM0231 BAM PT-XA-002-190-2-R15	BAM01UY BAM PT-XA-002-190-2-30	
Short description	Silicone-fiberglass tube	Silicone-fiberglass tube	Silicone-fiberglass tube	
Use	for cable guard, for weld protection	for cable guard, for weld protection	for cable guard, for weld protection	
Material	Fiberglass sheathed Silicon rubber, red lion oxide red silicone rubber	Fiberglass sheathed Silicon rubber, red	Fiberglass sheathed Silicon rubber, red lion oxide red silicone rubber	
Dimension	Ø 20.7 x 30480 mm	Ø 26 x 15000 mm	Ø 27.1 x 30480 mm	
Ambient temperature	-55...260 °C	-40...250 °C	-55...260 °C	
Productview	Page 388	Page 388	Page 388	

	BAM021F BAM PT-XA-005-510-T-R20	BAM02E3 BAM PT-XA-006-M91-T-00,9	BAM022Z BAM PT-XA-002-100-2-R15	BAM0230 BAM PT-XA-002-130-2-R15	
	Silicone strip	Silicone film	Silicone-fiberglass tube	Silicone-fiberglass tube	
	for cable guard, for weld protection	for cable guard, for weld protection	for cable guard, for weld protection	for cable guard, for weld protection	
	Silicone 60 white, trans-lucent	Silicone	Fiberglass sheathed Silicon rubber, red	Fiberglass sheathed Silicon rubber, red	
	1.6 x 51 x 20000 mm	1.6 x 914 x 914 mm	Ø 17 x 15000 mm	Ø 20 x 15000 mm	
	-40...180 °C	-65...233 °C	-40...250 °C	-40...250 °C	
	Page 388	Page 388	Page 388	Page 388	

	BAM0232 BAM PT-XA-002-380-2-R15	BAM0233 BAM PT-XA-002-500-2-R15	BAM017E BKS-PT-07/16-SI-15	BAM0212 BAM PT-XA-004-070-T-R16	BAM017H BKS-PT-10/16-SI-15
	Silicone-fiberglass tube	Silicone-fiberglass tube	Silicone tube	Silicone tube	Silicone tube
	for cable guard, for weld protection	for cable guard, for weld protection	for cable guard, for weld protection	for cable guard, for weld protection	for cable guard, for weld protection
	Fiberglass sheathed Silicon rubber, red	Fiberglass sheathed Silicon rubber, red	Silicone 60 white, translucent	Silicone 60 white, translucent	Silicone 60 white, translucent
	Ø 45 x 15000 mm	Ø 57 x 15000 mm	Ø 10.2 x 15000 mm	Ø 10.2 x 16000 mm	Ø 13.2 x 15000 mm
	-40...250 °C	-40...250 °C	-60...260 °C	-40...200 °C	-60...260 °C
	Page 388	Page 388	Page 388	Page 388	Page 389

	BAM0213 BAM PT-XA-004-100-T-R16	BAM017L BKS-PT-13/16-SI-15	BAM0214 BAM PT-XA-004-130-T-R16	
Short description	Silicone tube	Silicone tube	Silicone tube	
Use	for cable guard, for weld protection	for cable guard, for weld protection	for cable guard, for weld protection	
Material	Silicone 60 white, trans-lucent	Silicone 60 white, trans-lucent	Silicone 60 white, trans-lucent	
Dimension	Ø 13.2 x 16000 mm	Ø 16.2 x 15000 mm	Ø 16.2 x 16000 mm	
Ambient temperature	-40...200 °C	-60...260 °C	-40...200 °C	
Productview	Page 388	Page 389	Page 388	

	BAM017Z BKS-PT-50/16-SI-07.5	BAM0217 BAM PT-XA-004-500-T-R16		
Short description	Silicone tube	Silicone tube		
Use	for cable guard, for weld protection	for cable guard, for weld protection		
Material	Silicone 60 white, trans-lucent	Silicone 60 white, trans-lucent		
Dimension	Ø 53.2 x 7500 mm	Ø 53.2 x 16000 mm		
Ambient temperature	-60...260 °C	-40...200 °C		
Productview	Page 389	Page 388		

	BAM017N BKS-PT-16/16-SI-15	BAM0215 BAM PT-XA-004-160-T-R16	BAM0216 BAM PT-XA-004-190-T-R16	BAM017R BKS-PT-19/16-SI-15	BAM017U BKS-PT-38/16-SI-07.5
	Silicone tube	Silicone tube	Silicone tube	Silicone tube	Silicone tube
	for cable guard, for weld protection	for cable guard, for weld protection	for cable guard, for weld protection	for cable guard, for weld protection	for cable guard, for weld protection
	Silicone 60 white, trans-lucent	Silicone 60 white, trans-lucent	Silicone 60 white, trans-lucent	Silicone 60 white, trans-lucent	Silicone 60 white, trans-lucent
	Ø 19.2 x 15000 mm	Ø 19.2 x 16000 mm	Ø 21.2 x 16000 mm	Ø 22.2 x 15000 mm	Ø 41.2 x 7500 mm
	-60...260 °C	-40...200 °C	-40...200 °C	-60...260 °C	-60...260 °C
	Page 389	Page 388	Page 388	Page 389	Page 389

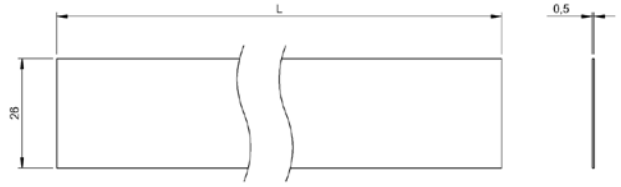

BAM0183

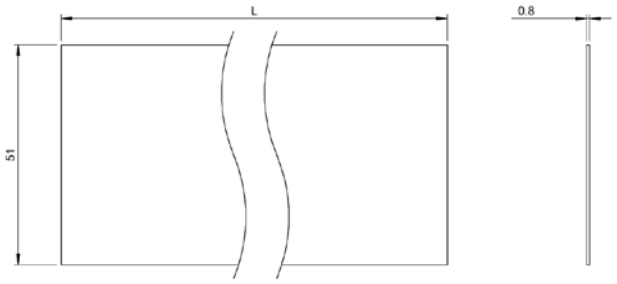

BAM0182

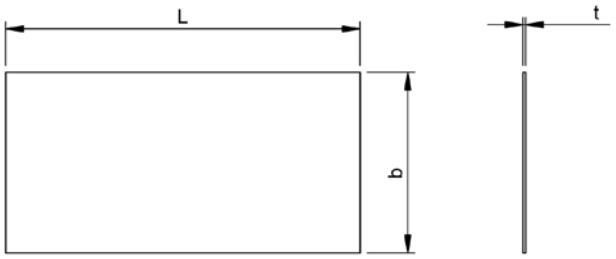

BAM021E, BAM021F

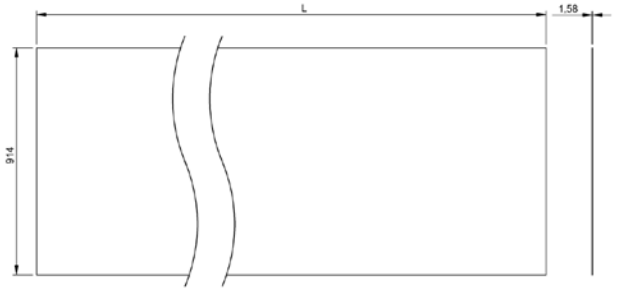

BAM02E3

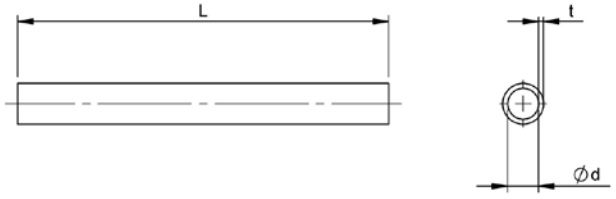

BAM022Z, BAM0230, BAM0231, BAM0232, BAM0233, BAM0212, BAM0213, BAM0214, BAM0215, BAM0216, BAM0217

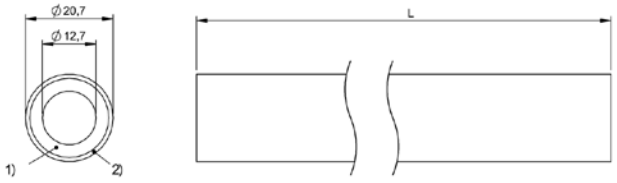

1) Fiberglass braided sleeve, 2) Red iron oxide flame protection

BAM01R2

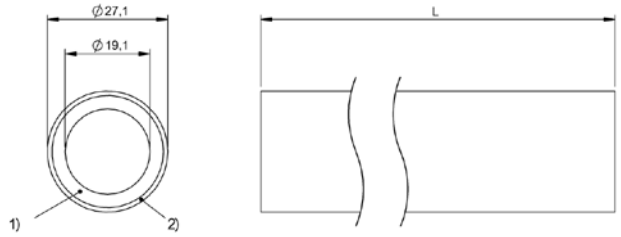

1) Fiberglass braided sleeve, 2) Red iron oxide flame protection

BAM01UY

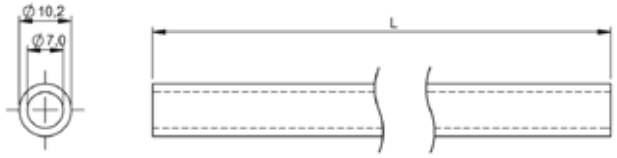

BAM017E

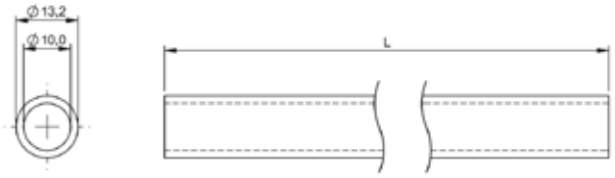

BAM017H

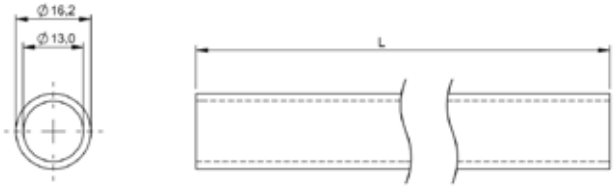

BAM017L

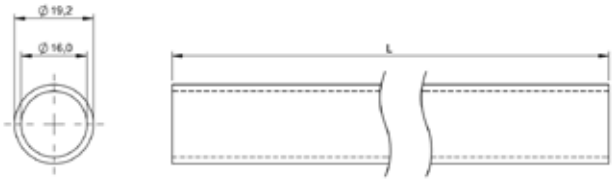

BAM017N

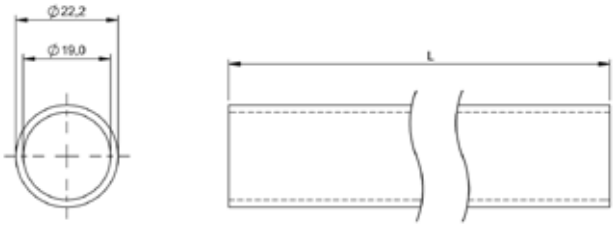

BAM017R

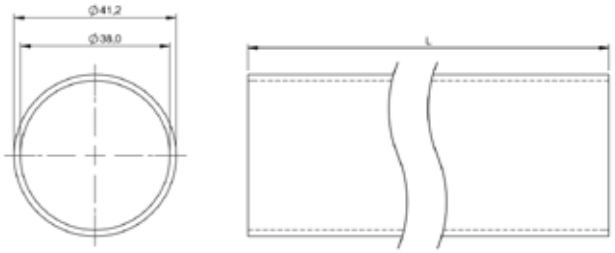

BAM017U

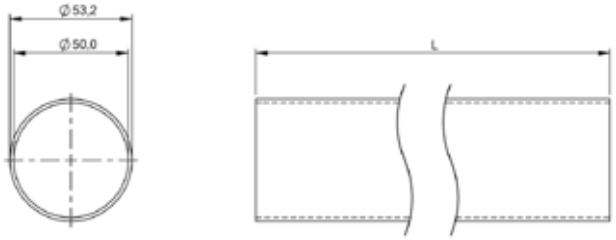

BAM017Z

	BAM02JE BES 08-FA-17	BAM009L BES 08-FA-49	BAM009M BES 08-FA-89	
Short description	Fixed stop	Fixed stop	Fixed stop	
Use	for inductive sensors Ø4, for inductive sensors BES M8	for inductive sensors Ø4, for inductive sensors BES M8	for inductive sensors Ø4, for inductive sensors BES M8	
Material	Stainless steel	Stainless steel	Stainless steel	
Dimension	Ø 8 x 28 mm	Ø 8 x 57 mm	Ø 8 x 97 mm	
Mounting	Screws M8	Screws M8	Screws M8	
Switching output	—	—	—	
Connection	—	—	—	
Ambient temperature	-25...100 °C	-25...100 °C	-25...100 °C	
Productview	Page 400	Page 400	Page 400	

	BAM00AZ BES 12-FA-70	BAM009N BES 08-FA-BS-4,0-G	BAM009P BES 08-FA-BS-4,0-W	BAM009R BES 08-FA-BS-8,0-G	BAM009T BES 08-FA-BS-8,0-W
	Fixed stop	Fixed stop	Fixed stop	Fixed stop	Fixed stop
	for inductive sensors Ø8, for inductive sensors BES M8	for inductive sensors Ø4, for inductive sensors BES M8	for inductive sensors Ø4, for inductive sensors BES M8	for inductive sensors Ø8, for inductive sensors BES M8	for inductive sensors BES M8
	Stainless steel	Aluminum anodized, red	Aluminum anodized, red	Aluminum anodized, red	Aluminum anodized, red
	Ø 12 x 78 mm	28 x 12 x 20 mm	31.8 x 12 x 20 mm	28 x 12 x 20 mm	31.8 x 12 x 20 mm
	Screws M12	Clamps	Clamps	Clamps	Clamps
	–	–	–	–	–
	–	–	–	–	–
	-25...100 °C	-25...100 °C	-25...100 °C	-25...100 °C	-25...100 °C
	Page 400	Page 400	Page 400	Page 400	Page 400

	BAM01AZ BAM FS-XE-001-M5-4	BAM019Y BAM FS-XE-003-M5-4	BAM019W BAM FS-XE-004-M8-4	
Short description	Positive stop tube switch	Positive stop tube switch	Positive stop tube switch	
Use	for inductive sensors BES M5, for inductive sensors Ø5	for inductive sensors BES M5, for inductive sensors Ø5	for inductive sensors BES M8	
Material	Stainless steel	Stainless steel	Stainless steel	
Dimension	Ø 8 x 35 mm	Ø 19 x 35 mm	Ø 19 x 53 mm	
Mounting	Screws M8	Screws M12	Screws M12	
Switching output	—	—	—	
Connection	—	—	—	
Ambient temperature	—	—	—	
Productview	Page 401	Page 401	Page 401	

	BAM01C0 BAM FS-XE-002-D4-4	SET0167 BAV BP-PH-00100-01	SET0168 BAV BP-PH-00100-02	SET017U BAV BP-PH-00100-11	SET016C BAV BP-PH-00102-01
	Positive stop tube switch	Plunger probe with chisel tip	Plunger probe with chisel tip	Plunger probe with chisel tip	Plunger probe with internal threads
	for inductive sensors Ø4	for positive stop plunger probe	for positive stop plunger probe	for positive stop plunger probe	for positive stop plunger probe
	Stainless steel	Brass Chrome-plated Steel Bronze Stainless steel Chrome-plated	Brass Chrome-plated Steel Bronze Stainless steel Chrome-plated	Brass Chrome-plated Steel Bronze Stainless steel Chrome-plated	Brass Chrome-plated Steel Bronze Stainless steel Chrome-plated
	Ø 13 x 47 mm	Ø 18 x 120.5 mm	Ø 18 x 125.6 mm	Ø 18 x 120.5 mm	Ø 18 x 120.5 mm
	Screws M8	Screws M18	Screws M18	Screws M18	Screws M18
	—	PNP normally open (NO)	PNP normally open (NO)	NPN normally open (NO)	PNP normally open (NO)
	—	Connector, M8x1-Male, 3-pin	Cable with connector, M12x1-Male, 4-pin, 0.20 m, PUR	Connector, M8x1-Male, 3-pin	Connector, M8x1-Male, 3-pin
	—	0...60 °C	0...60 °C	0...60 °C	0...60 °C
	Page 401	Page 401	Page 401	Page 401	Page 401

	SET016E BAV BP-PH-00102-02	SET0180 BAV BP-PH-00102-11	SET0181 BAV BP-PH-00102-12	
Short description	Plunger probe with internal threads	Plunger probe with internal threads	Plunger probe with internal threads	
Use	for positive stop plunger probe	for positive stop plunger probe	for positive stop plunger probe	
Material	Brass Chrome-plated Steel Bronze Stainless steel Chrome-plated	Brass Chrome-plated Steel Bronze Stainless steel	Brass Chrome-plated Steel Bronze Stainless steel Chrome-plated	
Dimension	Ø 18 x 125.6 mm	Ø 18 x 120.5 mm	Ø 18 x 125.6 mm	
Mounting	Screws M18	Screws M18	Screws M18	
Switching output	PNP normally open (NO)	NPN normally open (NO)	NPN normally open (NO)	
Connection	Cable with connector, M12x1-Male, 4-pin, 0.20 m, PUR	Connector, M8x1-Male, 3-pin	Cable with connector, M12x1-Male, 4-pin, 0.20 m, PUR	
Ambient temperature	0...60 °C	0...60 °C	0...60 °C	
Productview	Page 401	Page 401	Page 401	

	SET0169 BAV BP-PH-00101-01	SET016A BAV BP-PH-00101-02	SET017Y BAV BP-PH-00101-11	SET017Z BAV BP-PH-00101-12	SET015A BAV BP-PH-00093-01
	Plunger probe with flat tip	Plunger probe with flat tip	Plunger probe with flat tip	Plunger probe with flat tip	Plunger probe with round tip
	for positive stop plunger probe	for positive stop plunger probe	for positive stop plunger probe	for positive stop plunger probe	for positive stop plunger probe
	Brass Chrome-plated Steel Bronze Stainless steel Chrome-plated	Brass Chrome-plated Steel Bronze Stainless steel Chrome-plated	Brass Chrome-plated Steel Bronze Stainless steel Chro-me-plated	Brass Chrome-plated Steel Bronze Stainless steel Chrome-plated	Brass Chrome-plated Steel Bronze Stainless steel Chrome-plated
	Ø 18 x 120.5 mm	Ø 18 x 125.6 mm	Ø 18 x 120.5 mm	Ø 18 x 125.6 mm	Ø 18 x 120.5 mm
	Screws M18	Screws M18	Screws M18	Screws M18	Screws M18
	PNP normally open (NO)	PNP normally open (NO)	NPN normally open (NO)	NPN normally open (NO)	PNP normally open (NO)
	Connector, M8x1-Male, 3-pin	Cable with connector, M12x1-Male, 4-pin, 0.20 m, PUR	Connector, M8x1-Male, 3-pin	Cable with connector, M12x1-Male, 4-pin, 0.20 m, PUR	Connector, M8x1-Male, 3-pin
	0...60 °C	0...60 °C	0...60 °C	0...60 °C	0...60 °C
	Page 402	Page 402	Page 402	Page 402	Page 402

	SET015F BAV BP-PH-00093-02	SET017R BAV BP-PH-00093-11	SET017T BAV BP-PH-00093-12	
Short description	Plunger probe with round tip	Plunger probe with round tip	Plunger probe with round tip	
Use	for positive stop plunger probe	for positive stop plunger probe	for positive stop plunger probe	
Material	Brass Chrome-plated Steel Bronze Stainless steel Chrome-plated	Brass Chrome-plated Steel Bronze Stainless steel Chrome-plated	Brass Chrome-plated Steel Bronze Stainless steel Chrome-plated	
Dimension	Ø 18 x 125.6 mm	Ø 18 x 120.5 mm	Ø 18 x 125.6 mm	
Mounting	Screws M18	Screws M18	Screws M18	
Switching output	PNP normally open (NO)	NPN normally open (NO)	NPN normally open (NO)	
Connection	Cable with connector, M12x1-Male, 4-pin, 0.20 m, PUR	Connector, M8x1-Male, 3-pin	Cable with connector, M12x1-Male, 4-pin, 0.20 m, PUR	
Ambient temperature	0...60 °C	0...60 °C	0...60 °C	
Productview	Page 402	Page 402	Page 402	

	BAM025T BAM TG-AM-015-001	BAM02YU BAM TG-AM-015-006	BAM02JW BAM TG-AM-015-004	BAM02JY BAM TG-AM-015-005	BAM02JU BAM TG-AM-015-003
	Disc tip	Disc tip	Tip M8	Tip M10	Tip M4
	for positive stop plunger probe	for positive stop plunger probe	for positive stop plunger probe	for positive stop plunger probe	for positive stop plunger probe
	Stainless steel (1.7225) Zinc coated, light	Stainless steel (1.7225) Zinc coated, light	Stainless steel (1.7225) Zinc coated, light	Stainless steel (1.7225) Zinc coated, light	Stainless steel (1.7225) Zinc coated, light
	Ø 50.8 x 12 mm	Ø 25.4 x 12 mm	Ø 9.5 x 29 mm	Ø 9.5 x 29 mm	Ø 9.5 x 29 mm
	Screw M6	–	Screw M6	Screw M6	Screw M6
	–	–	–	–	–
	–	–	–	–	–
	0...60 °C	0...60 °C	0...60 °C	0...60 °C	0...60 °C
	Page 402	Page 402	Page 402	Page 402	Page 403

	BAM027T BAM TG-AM-015-002	BAM0260 BAM FS-XE-005-M8-2-01T	BAM025U BAM FS-XE-005-M8-2-01P	
Short description	Tip M6	Spare parts set for plunger probe	Spare parts set for plunger probe	
Use	for positive stop plunger probe	for positive stop plunger probe	for positive stop plunger probe	
Material	Stainless steel (1.7225) Zinc coated, light	Brass Chrome-plated Steel Bronze Stainless steel Chrome-plated	Brass Chrome-plated Steel Stainless steel Bronze Chrome-plated	
Dimension	Ø 9.5 x 29 mm	Ø 18 x 120.5 mm	Ø 18 x 125.6 mm	
Mounting	Screw M6	Screws	M8x1	
Switching output	—	—	—	
Connection	—	—	—	
Ambient temperature	0...60 °C	0...60 °C	0...60 °C	
Productview	Page 403	Page 403	Page 403	

	BAM025W BAM FS-XE-005-M8-2-01F	BAM022W BAM FS-XE-005-M8-2-01R			
	Spare parts set for plunger probe	Spare parts set for plunger probe			
	for positive stop plunger probe	for positive stop plunger probe			
	Brass Chrome-plated Steel Stainless steel Bronze Chrome-plated	Brass Chrome-plated Steel Bronze Stainless steel Chrome-plated			
	Ø 18 x 120.5 mm	Ø 18 x 125.3 mm			
	Screws	Screws			
	–	–			
	–	–			
	0...60 °C	0...60 °C			
	Page 403	Page 403			

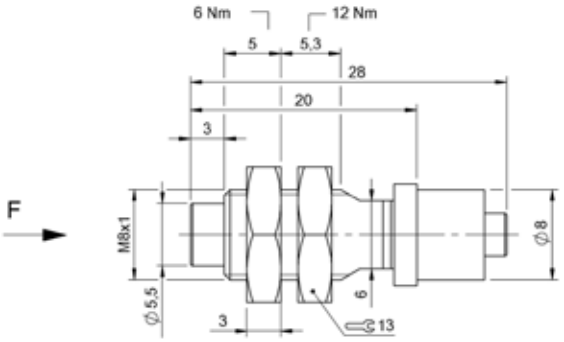

BAM02JE

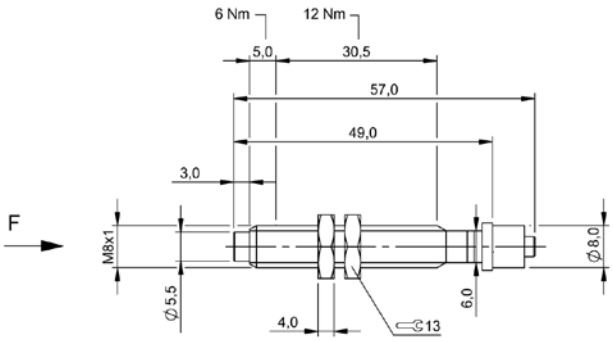

BAM009L

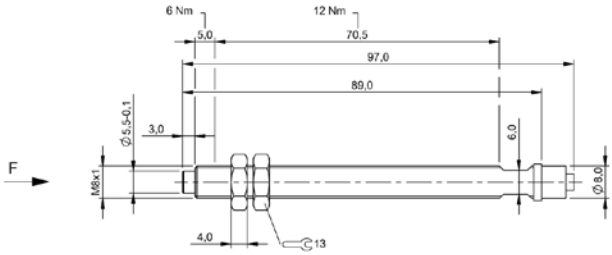

BAM009M

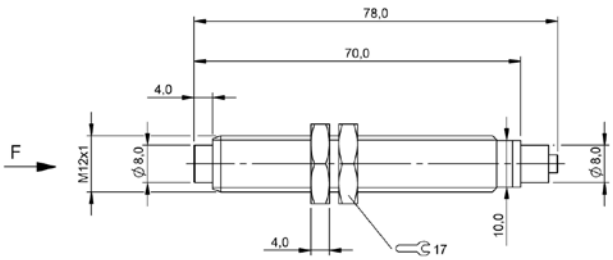

BAM00AZ

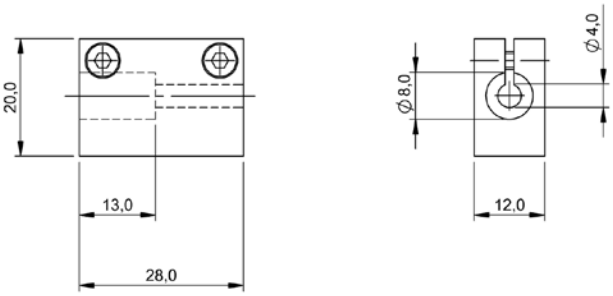

BAM009N

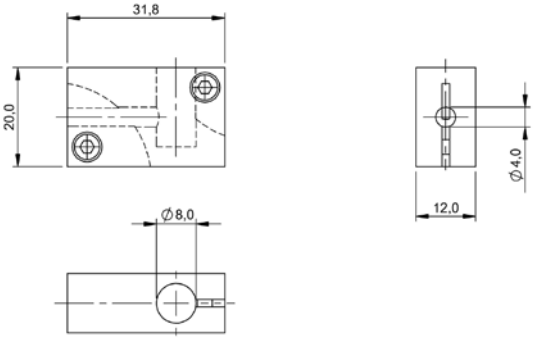

BAM009P

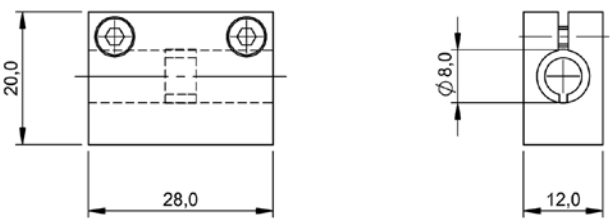

BAM009R

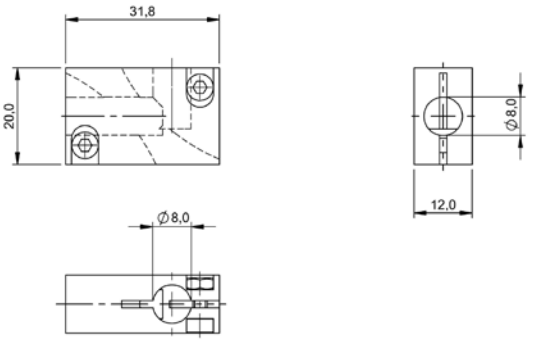

BAM009T

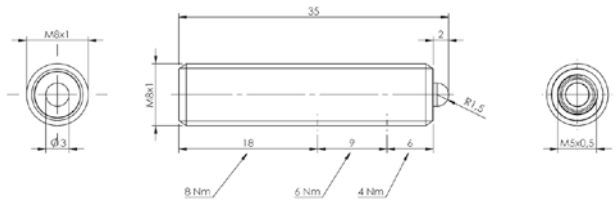

BAM01AZ

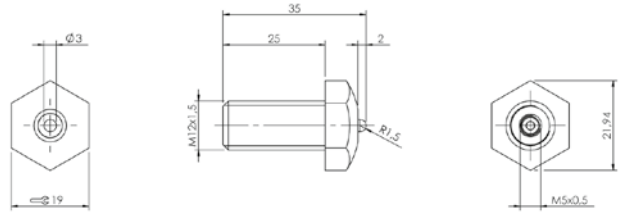

BAM019Y

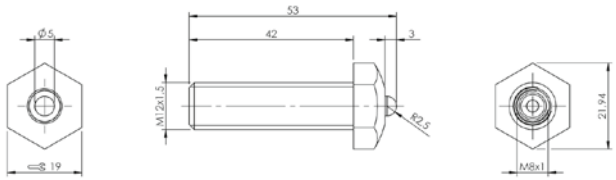

BAM019W

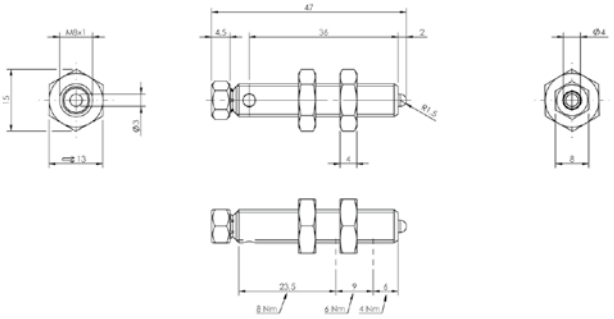

BAM01C0

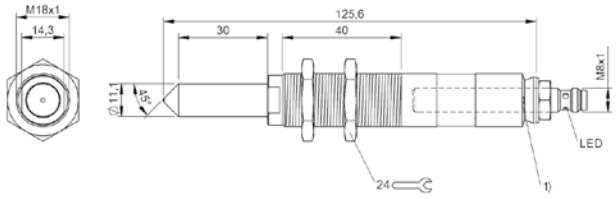

1) Leakage hole

SET0167, SET017U

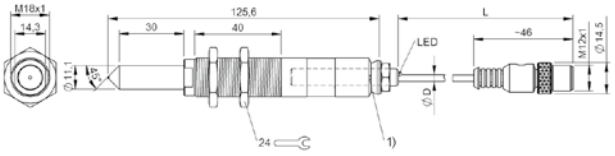

1) Leakage hole

SET0168

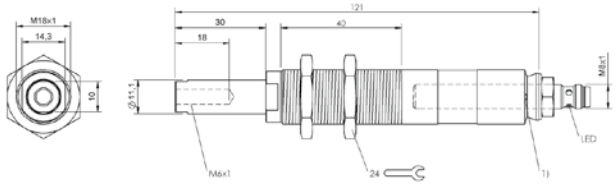

1) Leakage hole

SET016C, SET0180

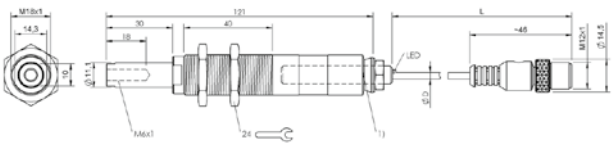

1) Leakage hole

SET016E, SET0181

Do you need more details? Our Product Finder at www.balluff.com provides you with product-specific information, including technical drawings, data sheets, user guides and more for each individual product. All items are available for download.

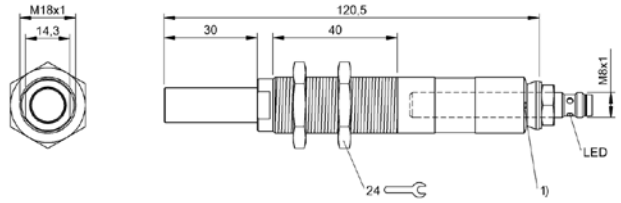

1) Leakage hole

SET0169, SET017Y

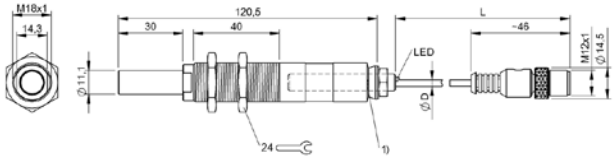

1) Leakage hole

SET016A, SET017Z

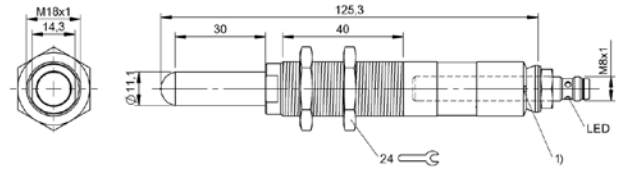

1) Leakage hole

SET015A, SET017R

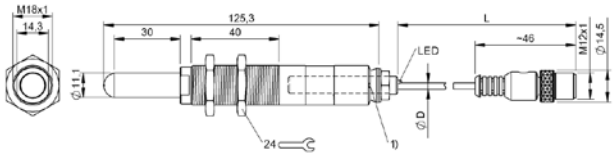

1) Leakage hole

SET015F, SET017T

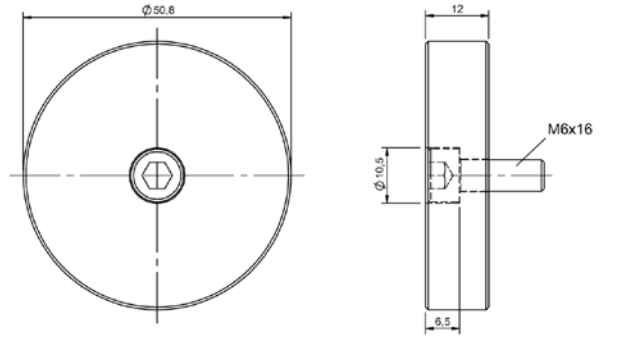

BAM025T

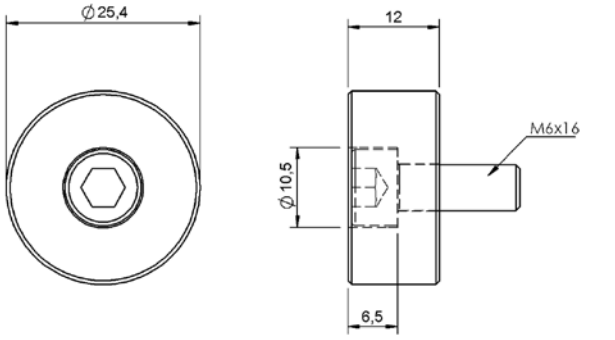

BAM02YU

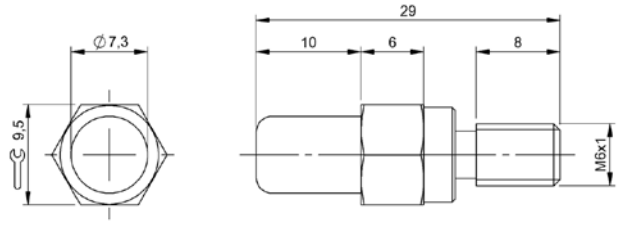

BAM02JW

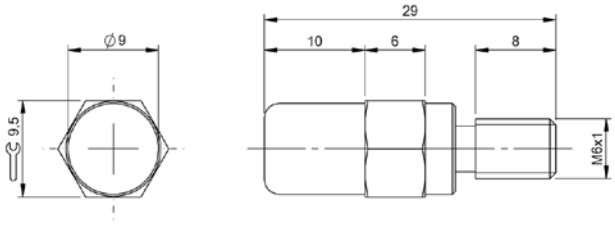

BAM02JY

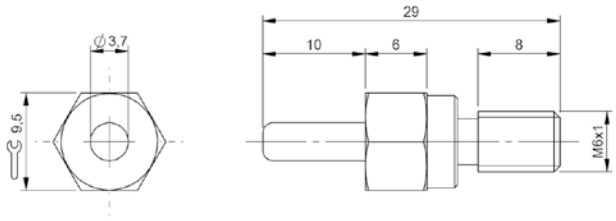

BAM02JU

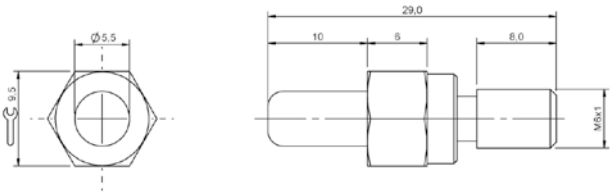

BAM027T

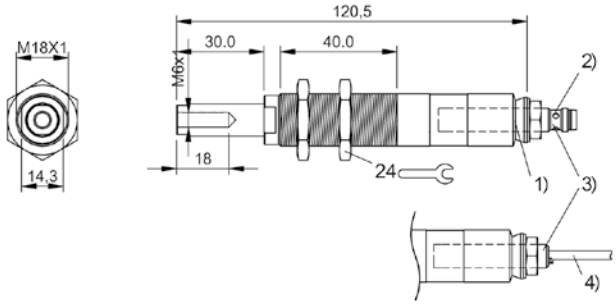

1) Leakage hole, 2) Detail of connector installation, 3) Not included in scope of delivery, 4) Cable attachment detail

BAM0260

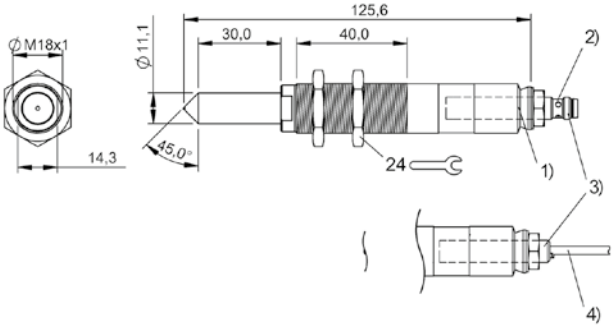

1) Leakage hole, 2) Detail of connector installation, 3) Not included in scope of delivery, 4) Cable attachment detail

BAM025U

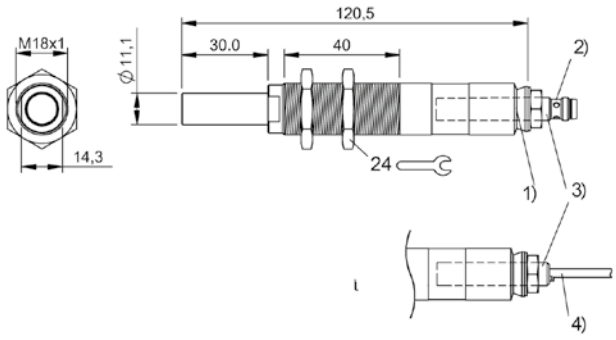

1) Leakage hole, 2) Detail of connector installation, 3) Not included in scope of delivery, 4) Cable attachment detail

BAM025W

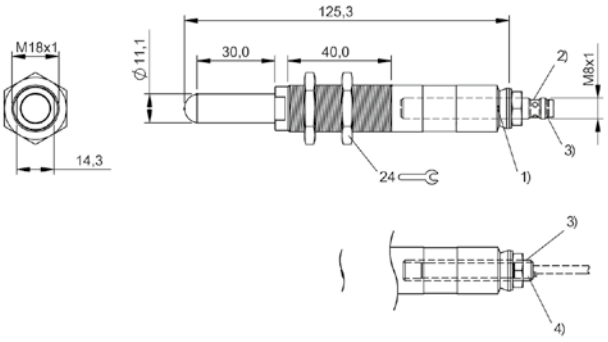

1) Leakage hole, 2) Detail of connector installation, 3) Included in the scope of delivery, 4) not installed, 5) Cable attachment detail

BAM022W

	BAM02R5 BAM PC-XE-028-M8-9	BAM009Z BES 08-SM-1	BAM00A0 BES 08-SM-1F	
Short description	Protective cap	Protective cap	Protective cap	
Use	For M08 sensors	For M08 sensors	For M08 sensors	
Material	Ceramic	PTFE	PTFE	
Dimension	Ø 38 x 20 mm	Ø 10 x 5 mm	Ø 10 x 9 mm	
Mounting	M8x1	Screws	Screws	
Productview	Page 372	Page 372	Page 372	

	BAM00EZ BES 18-SM-1	BAM00F0 BES 18-SM-2	BAM00F1 BES 18-SM-3	
Short description	Protective cap	Protective cap	Protective cap	
Use	For M18 sensors	For M18 sensors	For M18 sensors	
Material	PTFE	POM	PTFE	
Dimension	Ø 22.00 mm/ Ø 18.00 mm x 5.00 mm	Ø 21.50 mm/ Ø 18.00 mm x 9.30 mm	Ø 38.50 mm/ Ø 18.00 mm x 65.00 mm	
Mounting	Screws	Screws	Screws	
Productview	Page 373	Page 373	Page 373	

	BAM02KM BAM CS-XA-001-M12-5	BAM02R6 BAM PC-XE-028-M12-9	BAM00C2 BES 12-SM-2	BAM00EP BES 16-SM-2	BAM02R7 BAM PC-XE-028-M18-9
	Protective cap	Protective cap	Protective cap	Protective cap	Protective cap
	for M12 connector	For M12 sensors	For M12 sensors	For M16 sensors	for front-flush sensors M18, for inductive sensors BES M18
	Stainless steel	Ceramic	POM	PTFE	Ceramic
	Ø 13.5 x 12.5 mm	Ø 38 x 20 mm	Ø 16 x 10 mm	Ø 20 x 15 mm	Ø 38 x 20 mm
	Screws	M12x1	Screws	Screws	–
	Page 372	Page 372	Page 372	Page 372	Page 372

	BAM00H8 BES 22-SM-2	BAM012P BKS-23-CS-00	BAM02R8 BAM PC-XE-028-M30-9	BAM00HJ BES 30-SM-1	BAM00HK BES 30-SM-2
	Protective cap	Protective cap	Protective cap	Protective cap	Protective cap
	for M22 sensors	for inductive sensors BES M23	for front-flush sensors M30	For M30 sensors	For M30 sensors
	PTFE	Brass	Ceramic	POM	POM
	Ø 28 x 15 mm	Ø 26 x 11 mm	Ø 38 x 20 mm	Ø 34 x 5 mm	Ø 37 x 15 mm
	Screws	Screws	Screws	Screws	Screws
	Page 373	Page 373	Page 373	Page 373	Page 373

	BAM00HL BES 30-SM-3	BAM00HM BES 30-SM-5	BAM00JL BES 36-SM-2	
Short description	Protective cap	Protective cap	Protective cap	
Use	For M30 sensors	For M30 sensors	For M36 sensors	
Material	PTFE	PTFE	POM	
Dimension	Ø 41.3 x 73.4 mm	Ø 41.3 x 73.4 mm	Ø 42 x 15 mm	
Mounting	Screws	Screws	Screws	
Productview	Page 410	Page 410	Page 410	

	BAM02TU BAM CS-XA-001-M12-2				
	Protective cap				
	for processor units BIS U				
	Brass nickel plated				
	Ø 14.5 x 15 mm				
	Screws				
	Page 410				

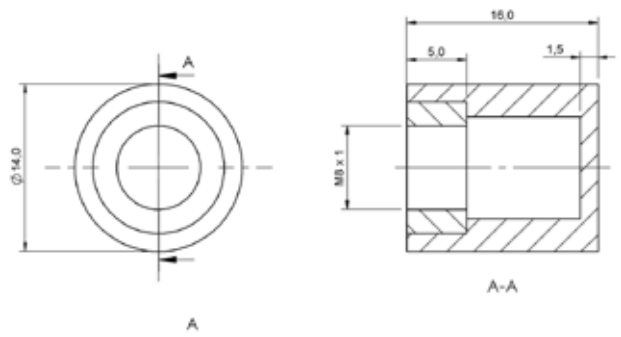

BAM02R5

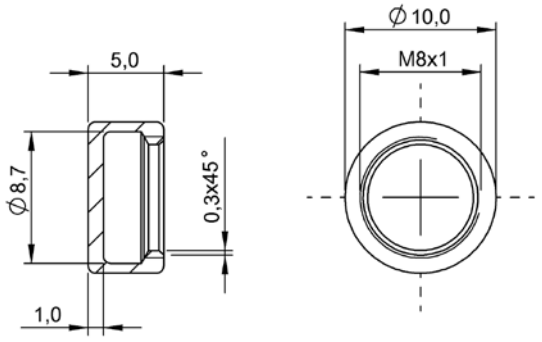

BAM009Z

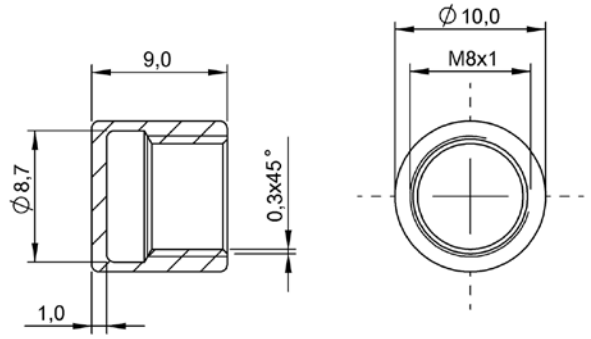

BAM00A0

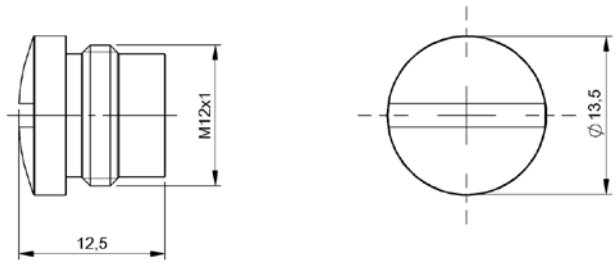

BAM02KM

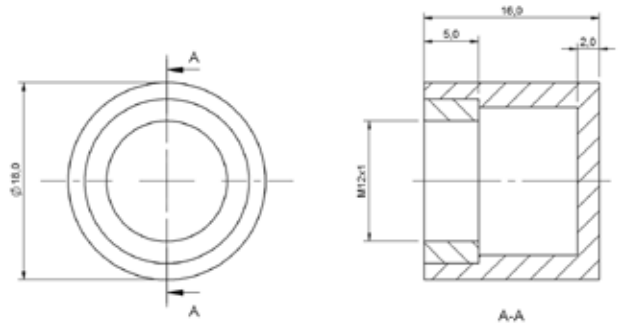

BAM02R6

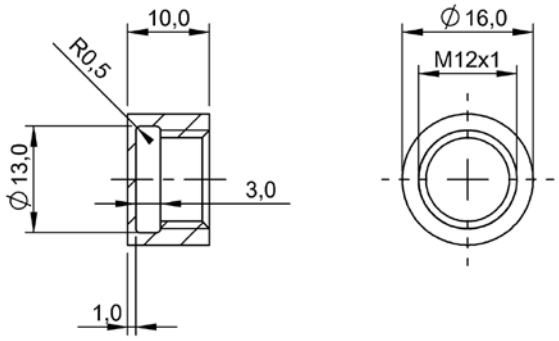

BAM00C2

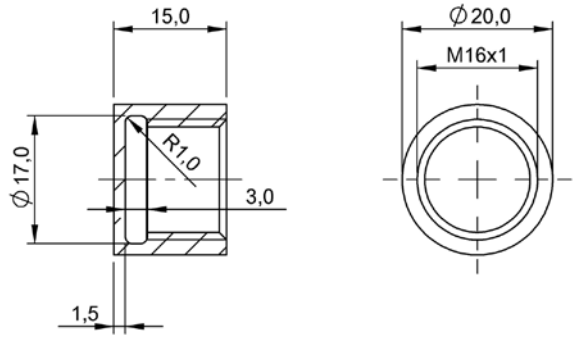

BAM00EP

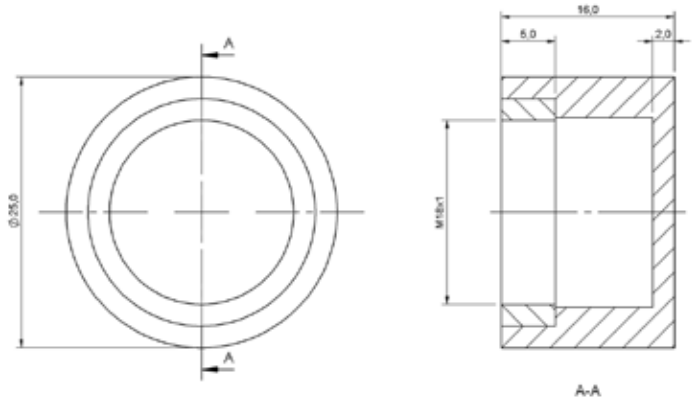

BAM02R7

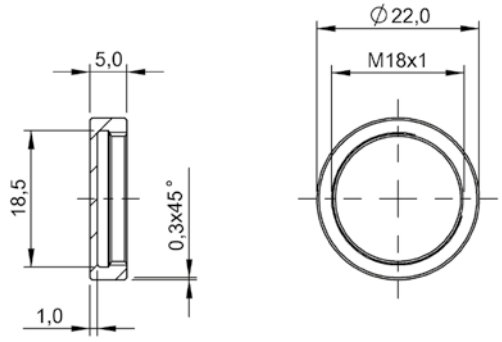

BAM00EZ

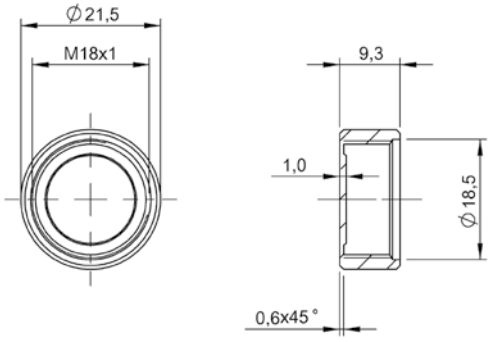

BAM00F0

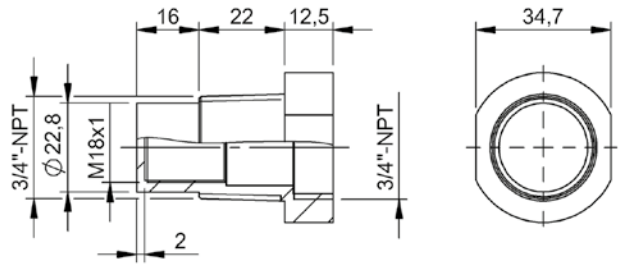

BAM00F1

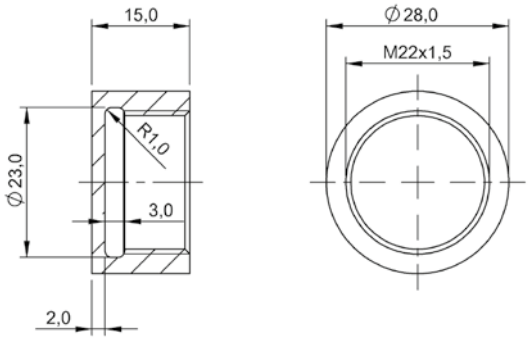

BAM00H8

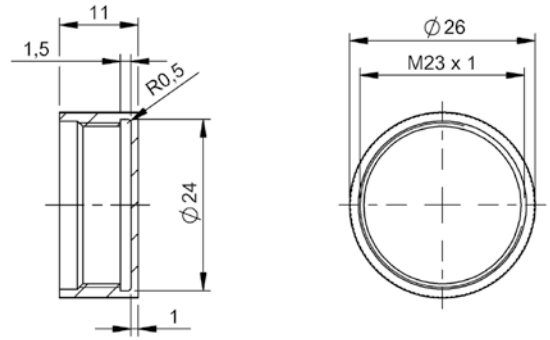

BAM012P

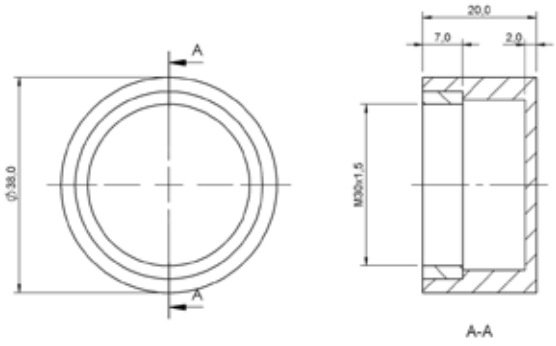

BAM02R8

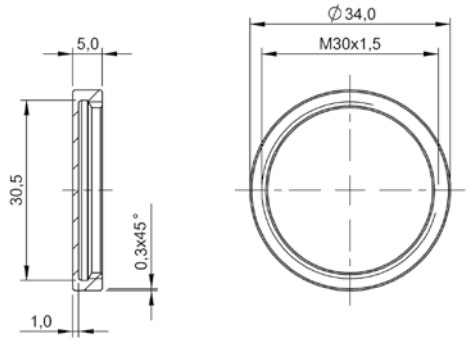

BAM00HJ

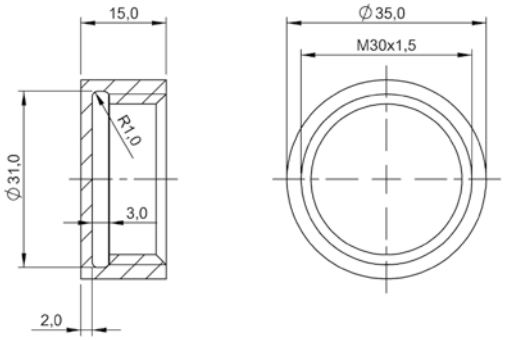

BAM00HK

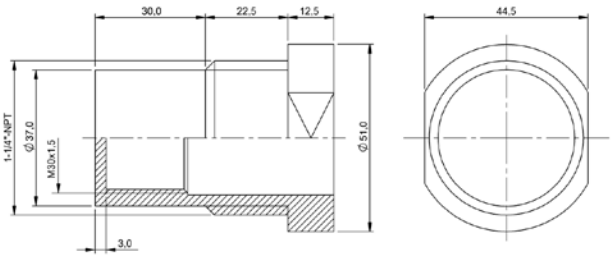

BAM00HL

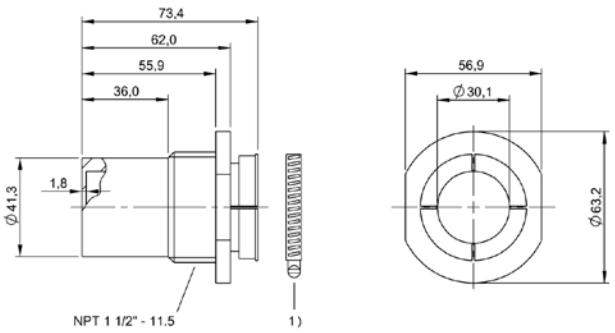

1) Hose clamp 8x0.6 on Ø43

BAM00HM

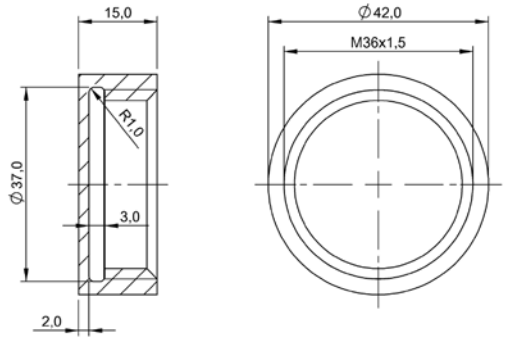

BAM00JL

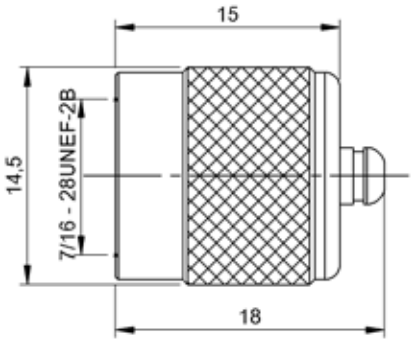

BAM02TU

	BAM029N BAM AN-AM-001-01-1	BAM00PY BOS 12-LT-1	
Short description	air tube / cooling	air tube / cooling	
Use	for protective housing BOS 23K, for protective housing BOS 50K	for photoelectric sensors BOS 12M	
Material	—	—	
Protection sheet material	—	—	
Dimension	62 x 17.3 x 21.2 mm	Ø 14 x 25 mm	
Mounting	Screws	Thread M12x1	
Ambient temperature	—	—	
Approval/Conformity	—	—	
Productview	Page 418	Page 418	

	BAM02WF BAM PC-XE-034-Q40-1	BAM01LJ BAM PC-US-007-M18-2/W	
Short description	Protective cover	Protective cover	
Use	for inductive sensors BES Q40, for inductive couplers BIC Q40	for ultrasonic sensors BUS M18	
Material	PA 6 Aluminum Anodized	Beryllium copper black coated	
Protection sheet material	—	—	
Dimension	106 x 103.2 x 65 mm	Ø 22 x 25 mm	
Mounting	Screws	Screws	
Ambient temperature	—	—	
Approval/Conformity	—	—	
Productview	Page 418	Page 418	

	BAM00R9 BOS 18-LT-1	BAM01LE BAM CS-XA-004-U7/8-A	BAM01LF BAM CS-XA-005-U7/8-A	BAM01YN BAM CS-XA-008-M12-4
	air tube / cooling	Protective cover	Protective cover	Protective cover
	for photoelectric sensors BOS 18K, for photoelectric sensors BOS 18M	BNI, BPI	BNI, BPI	for M12 connector
	—	PA	PA	Brass nickel plated
	—	—	—	—
	Ø 22 x 30 mm	Ø 27 x 150 mm	Ø 27 x 150 mm	15 × 10.5 mm
	Thread M18x1	Screws	Screws	Screws
	—	—	—	—
	—	—	—	—
	Page 418	Page 418	Page 418	Page 418

	BAM024W BAM PC-VS-017-1	BAM02NA BAM PC-VS-023-1	BAM02W0 BAM PC-VS-023-1-01	BAM029L BAM PC-OS-024-23K-1
	Protective cover for optics	Protective cover for optics	Protective cover for optics	Protective housing
	for BVS …-E	for BVS SC-..	for BVS SC-..	for photoelectric sensors BOS 23K
	Stainless steel Aluminum	Aluminum anodized, black	Aluminum anodized, black	—
	Glass ceramic	Luxacryl/2h	Luxacryl/2h	Glass ceramic
	64 x 46 x 60 mm	Ø 45 x 54 mm	Ø 45 x 83 mm	84.1 x 107 x 124.5 mm
	Screws	Screws	Screws	Screws, Clamps
	—	—	—	-5...70 °C, cooled max. 160 °C, min. 0 °C (water 8°C, 2l/min)
	—	—	—	CE, ATEX, WEEE
	Page 419	Page 419	Page 419	Page 419

	BAM029M BAM PC-OS-025-23K-1	BAM029K BAM PC-OS-026-23K-1	
Short description	Protective housing	Water connection for protective housing	
Use	for photoelectric sensors BOS 23K	for protective housing BOS 23K	
Material	—	—	
Protection sheet material	PMMA	—	
Dimension	84.1 x 107 x 124.5 mm	3 x 70.7 x 45.7 mm	
Mounting	Screws, Clamps	Screws	
Ambient temperature	-5...90 °C, uncooled	—	
Approval/Conformity	—	—	
Productview	Page 419	Page 419	

	BAM01Y5 BAM PC-XO-005-08M-4	BAM01Y6 BAM PC-XO-005-12M-4	
Short description	Protective nut	Protective nut	
Use	for photoelectric sensors BOS 08M	for photoelectric sensors BOS 12M	
Material	Stainless steel Glass	Stainless steel Glass	
Protection sheet material	—	—	
Dimension	Ø 12 x 10 mm	Ø 17 x 10 mm	
Mounting	Screws	Screws	
Ambient temperature	—	—	
Approval/Conformity	—	—	
Productview	Page 420	Page 420	

BAM029C BAM PC-OS-024-50K-1
Protective housing
for photoelectric sensors BOS 50K
–
Glass ceramic
89.1 x 133 x 135.7 mm
Screws, Clamps
-5...70 °C, cooled max. 160 °C, min. 0 °C (water 8°C, 2l/min)
CE, ATEX, WEEE
Page 419

BAM02H4 BAM PC-OS-025-50K-1
Protective housing
for photoelectric sensors BOS 50K
–
PMMA
89.1 x 133 x 135.7 mm
Screws, Clamps
-5...90 °C, uncooled
–
Page 419

BAM029P BAM PC-OS-026-50K-1
Water connection for protective housing
for protection cover optics BOS 50K
–
–
3 x 80.7 x 49.7 mm
Screws
–
–
Page 419

BAM01RR BAM PC-VS-008-1
Protective housing
for Vision sensor BVS
Aluminum Painted Glass
–
80 x 175 x 58 mm
Screws
–
–
Page 419

BAM01NC BAM PC-XO-005-18M-4
Protective nut
for photoelectric sensors BOS 18M
Stainless steel Glass
–
Ø 22 x 13 mm
Screws
–
–
Page 420

BAM00RL BOS 18-SM-1
Protective nut
for photoelectric sensors BOS 18M
POM
Glass
Ø 22 x 16 mm
Screws
–
–
Page 420

BAM01L8 BAM PC-XO-006-23K-1
Protective cover for optics
for photoelectric sensors BOS 23K
Aluminum Anodized Glass
–
22.5 x 59.3 x 34.3 mm
Screws
–
–
Page 420

BAM01YL BAM PC-XO-006-23K-G/RK
Protective cover for optics
for protection cover optics BOS 23K
Glass
–
58 x 3 x 19.9 mm
Screws
–
–
Page 420

	BAM01C1 BAM CS-XA-001-M8-C	BAM01C2 BAM CS-XA-002-M12-A	
Short description	Protective nut	Protective nut	
Use	for junction blocks M8	BNI M12	
Material	PC ABS	PC ABS (UL certified)	
Protection sheet material	—	—	
Dimension	Ø 9.1 x 8.5 mm	Ø 14 x 13.2 mm	
Mounting	Screws	Screws	
Ambient temperature	—	—	
Approval/Conformity	—	—	
Productview	Page 420	Page 420	

	BAM0114 BKS-12-CS-01	BAM0115 BKS-12-CS-02	BAM012T BKS-7/8-CS-00-A	
	Protective nut	Port cover	Port cover	
	for M12 connector	for active and passive junction blocks	for active and passive junction blocks	
	Brass nickel plated	PC/ABS	Aluminum Anodized Nickel-plated brass	
	–	–	–	
	Ø 13.5 x 12 mm	Ø 12 x 11.9 mm	Ø 0.9 „ x 0.8 ″	
	Screws	M12x1	7/8“-16	
	–	–	–	
	–	–	–	
	Page 421	Page 421	Page 421	

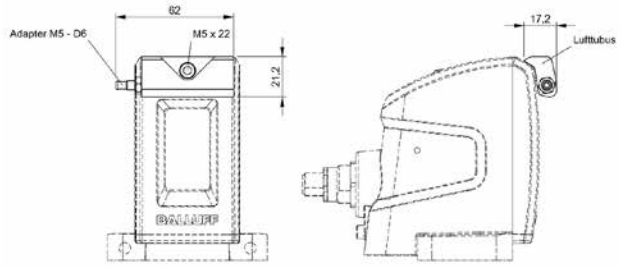

BAM029N

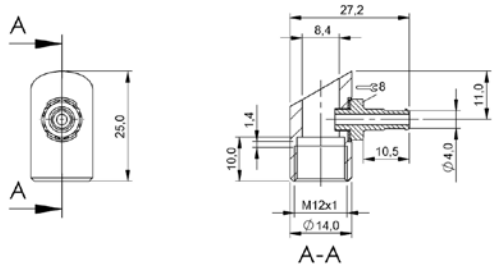

BAM00PY

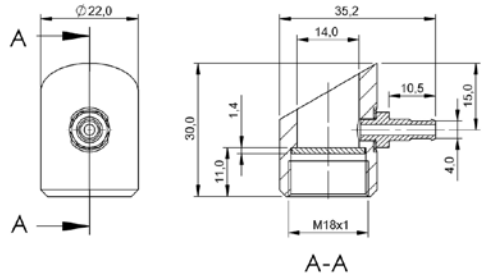

BAM00R9

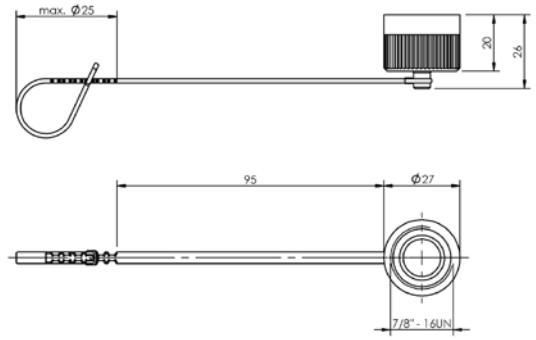

BAM01LE

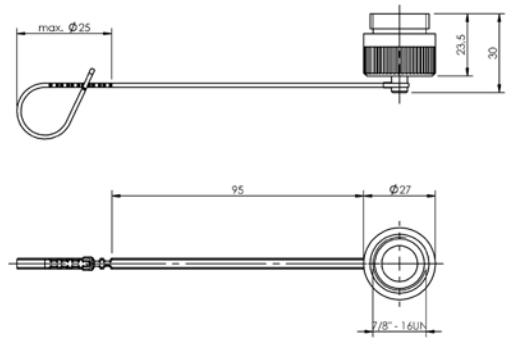

BAM01LF

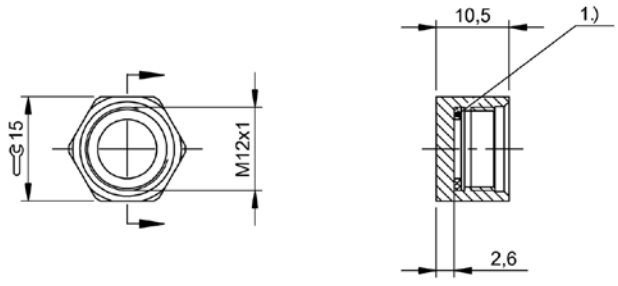

1) Sealing ring

BAM01YN

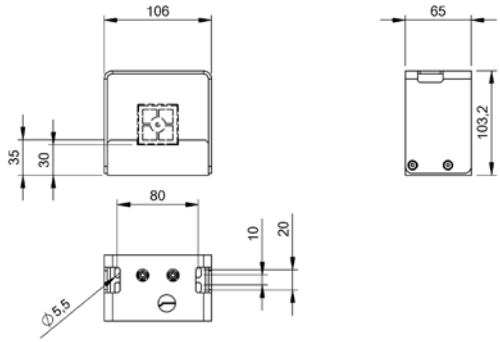

BAM02WF

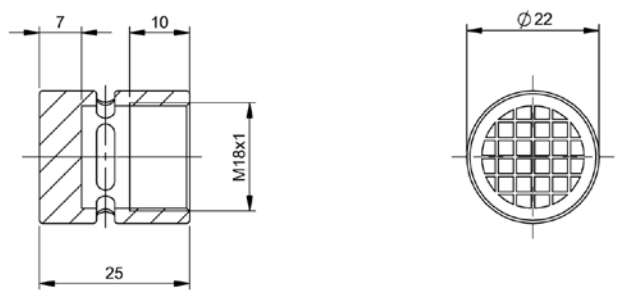

BAM01LJ

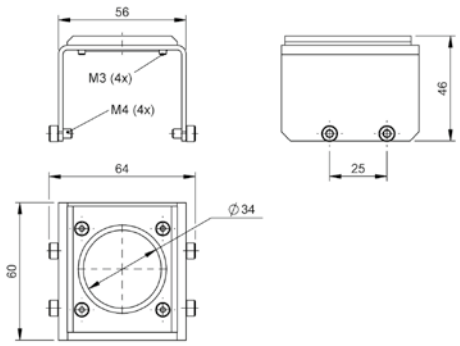

BAM024W

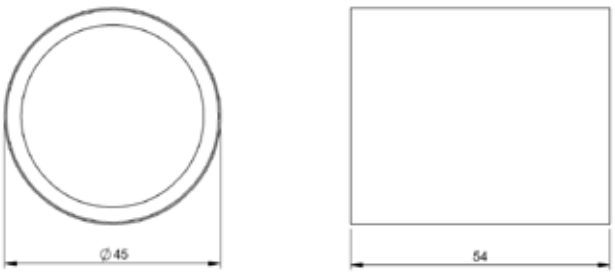

BAM02NA

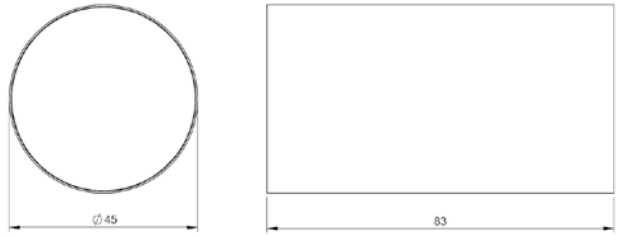

BAM02W0

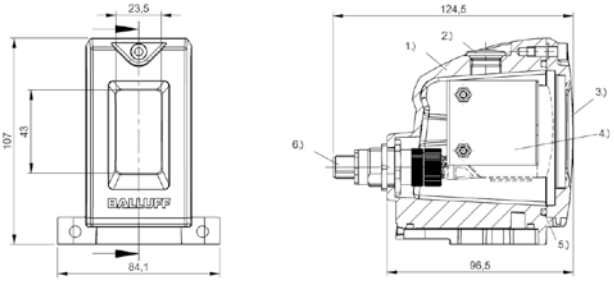

1) Housing, 2) Sensor setting access, 3) Cover, 4) Mounting plate, 5) Sealing ring, 6) Pass-through

BAM029L, BAM029M

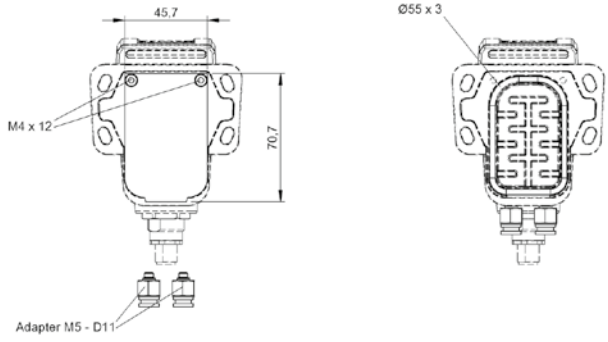

BAM029K

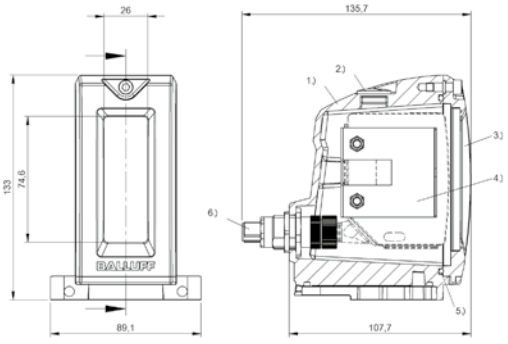

1) Housing, 2) Sensor setting access, 3) Cover, 4) Mounting plate, 5) Sealing ring, 6) Pass-through

BAM029C, BAM02H4

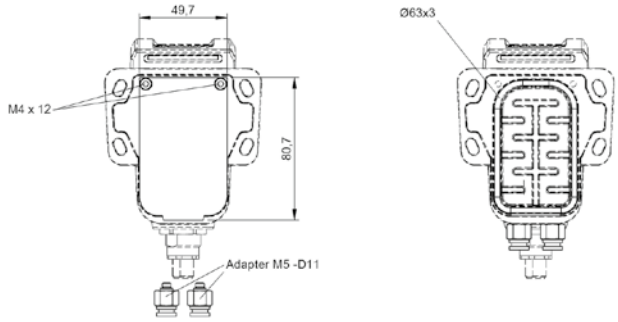

BAM029P

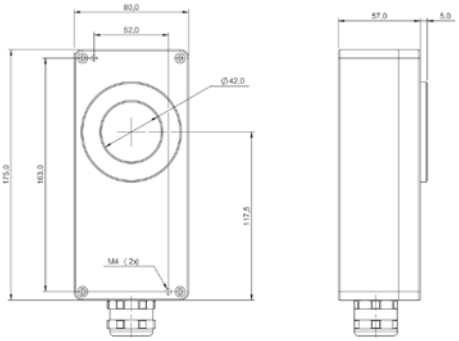

BAM01RR

Do you need more details? Our Product Finder at www.balluff.com provides you with product-specific information, including technical drawings, data sheets, user guides and more for each individual product. All items are available for download.

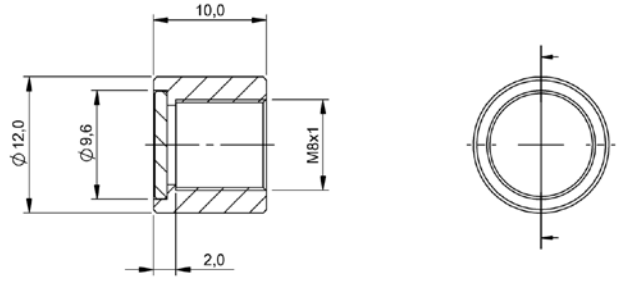

BAM01Y5

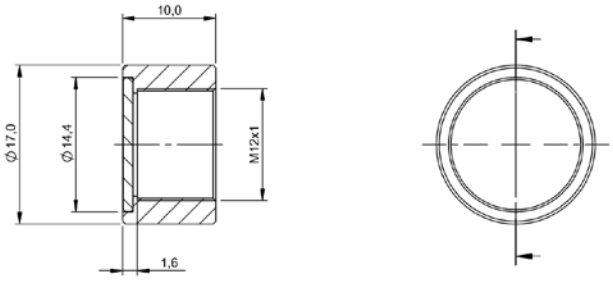

BAM01Y6

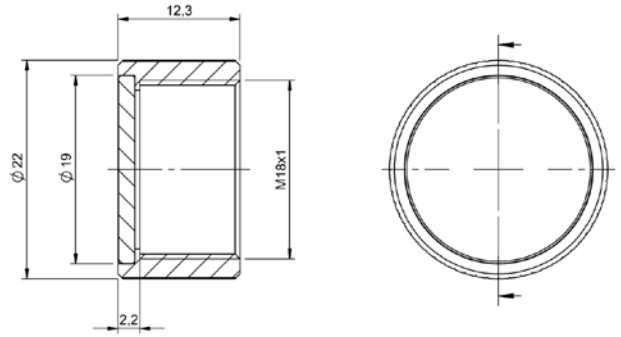

BAM01NC

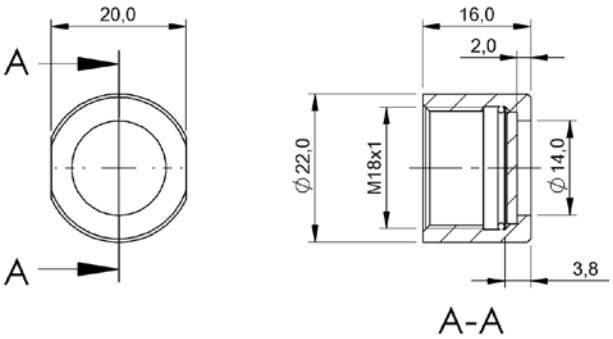

BAM00RL

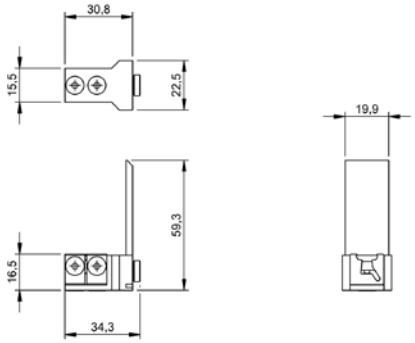

BAM01L8

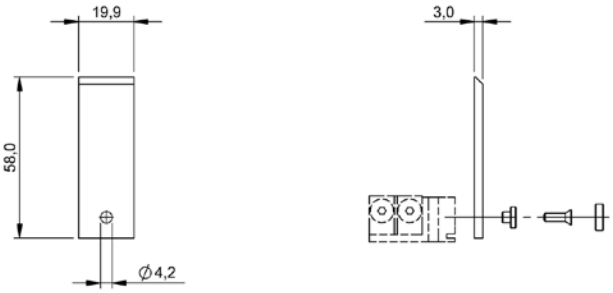

BAM01YL

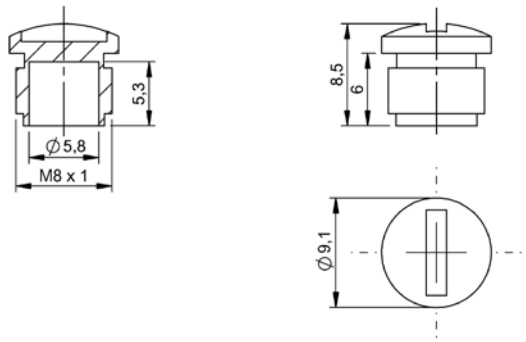

BAM01C1

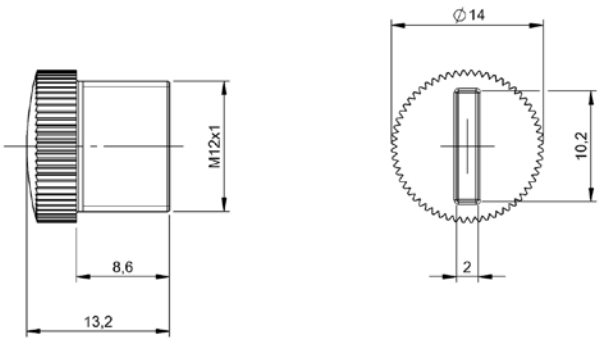

BAM01C2

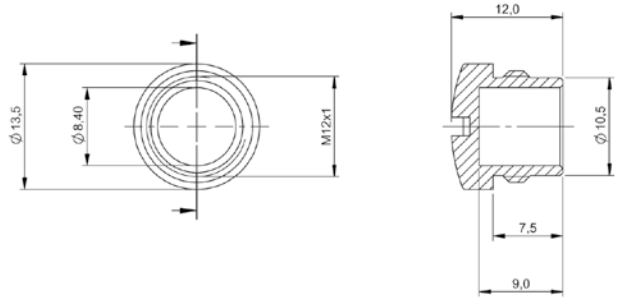

BAM0114

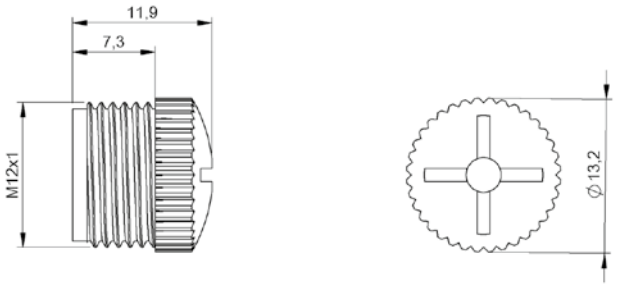

BAM0115

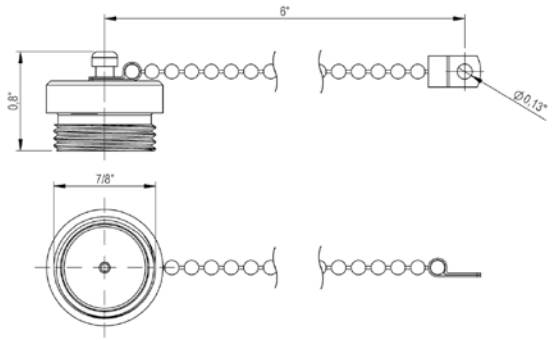

BAM012T

	BAM0206 BAM FK-VS-002-03-1
Short description	Focusing ring lock
Use	for Vision sensor BVS
Application	For locking the set focus
Material	Aluminum anodized
Mounting	Screw M4

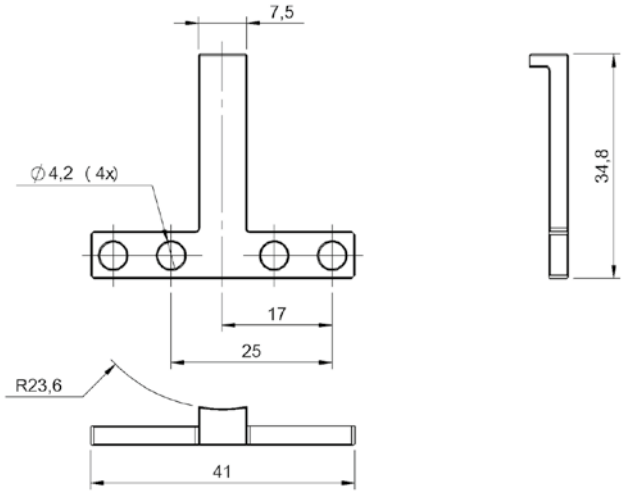

BAM0206

	BAM015U BESA-08-CM	BAM015W BESA-12-CM	
Short description	Collision Protection	Collision Protection	
Use	for inductive sensors BES M8	for inductive sensors BES M12	
Material	POM anodized Aluminum	POM anodized Aluminum	
Dimension	Ø 16 x 22.1 mm	Ø 22 x 21 mm	
Mounting	Screws M16	Screws M22	
Ambient temperature	-45...85 °C	-45...85 °C	
Productview	Page 426	Page 426	

	BAM015Y BESA-18-CM	BAM015Z BESA-30-CM	BAM00NU BFO 04-FS-1	
	Collision Protection	Collision Protection	Metal corrugated tubes	
	for inductive sensors BES M18	for inductive sensors BES M30	for fibre optics BFO M4	
	POM anodized Aluminum	POM anodized Aluminum	Brass nickel plated Steel	
	Ø 30 x 30 mm	Ø 47 x 37.3 mm	Ø 12 x 2000 mm	
	Screws M30	Screws M47	Screw M3	
	-45...85 °C	-45...85 °C	—	
	Page 426	Page 426	Page 426	

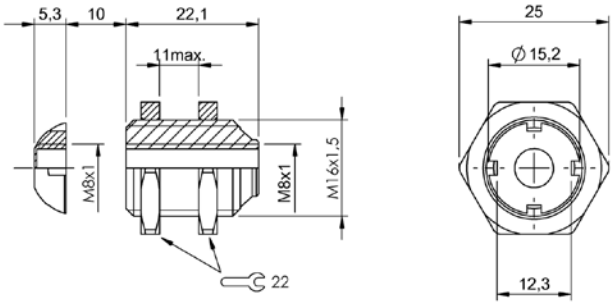

BAM015U

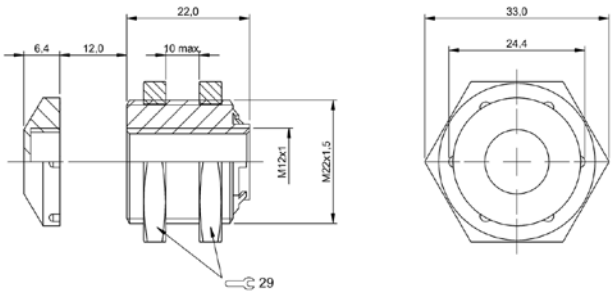

BAM015W

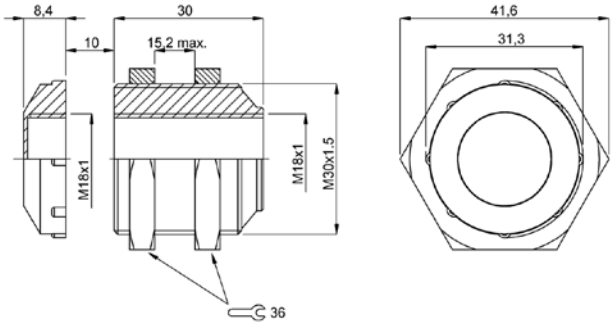

BAM015Y

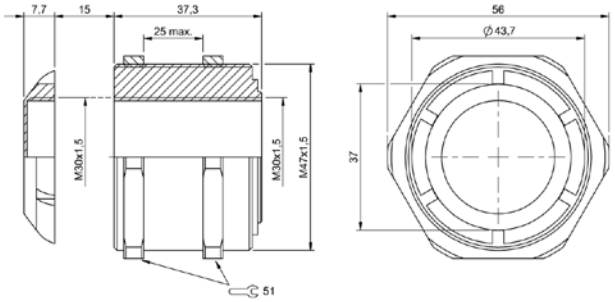

BAM015Z

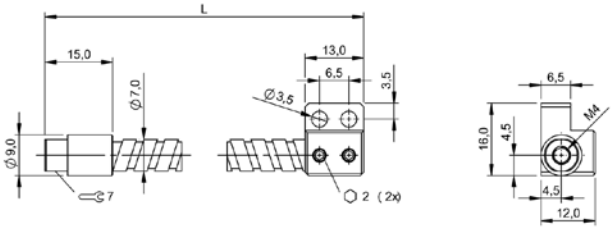

BAM00NU

Versatile and flexible mounting solutions

FASTENING TECHNOLOGY

With our assembly systems and brackets, you can adapt the sensors and equipment to your particular task.

Simple to install and adjust, these provide – in addition to attachment – exact positioning, even under difficult conditions. Balluff mounting solutions are distinguished by high-quality materials and exact processing.

The most important benefits

- Flexible and versatile
- Compatible and universal
- Excellent price/performance ratio

	SET011L BAV BP-PH-00064-01	SET011M BAV BP-PH-00065-01	SET01NU BAV BP-PH-00180-01	
Principle of operation	Mounting system	Mounting system	—	
Use	for mounting system BMS	for mounting system BMS	for holding rods with Ø12 mm, for mounting system BMS	
Material	Aluminum Plastic	Aluminum Anodized Die-cast zinc	Aluminum Anodized Die-cast zinc	
Dimension	150 × 150 mm	150 × 150 mm	150 × 150 mm	
Mounting	Screws, clamps	Screws, clamps	Screws, clamps	
Additional features	—	—	—	
Approval/Conformity	—	—	—	
Productview	Page 444	Page 444	Page 444	

	BAM0275 BMS CU-M-D12-B040-00	BAM02JT BMS CU-M-D12-B040-02	BAM03EU BMS CU-M-D12-E038-01	
Principle of operation	Mounting system	Mounting system	Mounting system	
Use	for mounting system BMS, for holding rods with Ø12 mm	for mounting system BMS, for holding rods with Ø12 mm	for holding rods with Ø12 mm, for monitor holder BMS, for mounting system BMS	
Material	Zinc chrome plated, matte	Zinc chrome plated, matte	Stainless steel	
Dimension	60 x 30 x 36 mm	60 x 30 x 42.8 mm	30 x 37 x 50 mm	
Mounting	Screws, clamps	Screws, clamps	Screws, Clamps	
Additional features	—	—	—	
Approval/Conformity	—	—	Ecolab	
Productview	Page 445	Page 445	Page 445	

	SET01U1 BAV BP-PH-00214-01	SET01KE BAV DG-PH-00096-01	BAM033K BMS AD-M-004-X19/MIS-D	BAM024R BMS CCJ-M-D12-B-01	BAM024P BMS CU-M-D12-B028-00
	Holding system	–	Mounting system	Mounting system	Mounting system
	for holding rods with Ø12 mm, for mounting system BMS	for holding rods with Ø30 mm, for mounting system BMS	for monitor holder BMS, for quick-change plate BVS	for mounting system BMS, for holding rods with Ø12 mm	for mounting system BMS, for holding rods with Ø12 mm
	Stainless steel	Aluminum Cast aluminum	Aluminum anodized, natural	Zinc chrome plated, matte	Zinc chrome plated, matte
	400 x 600 mm	310 × 510 mm	6 x 116 x 116 mm	45.5 x 36 x 30 mm	64 x 30 x 36 mm
	Screws, clamps	Screws, clamps	Screws	Screws, clamps	Screws, clamps
	–	–	–	–	–
	Ecolab	–	–	–	–
	Page 444	Page 444	Page 444	Page 444	Page 444

	BAM03EY BMS CU-M-D12-E038-02	BAM033U BMS CU-M-D30-E040-00	BAM002J BMS CU-P-D12-A040-00	BAM034K BMS CUJ-M-D30-E057-00	BAM034L BMS CUJ-M-D30-E060-01
	Mounting system	Mounting system	Mounting system	Mounting system	Mounting system
	for holding rods with Ø12 mm, for monitor holder BMS, for mounting system BMS	for holding rods with Ø30 mm, for mounting system BMS	for holding rods with Ø12 mm, for holding rods with 10x10 mm	for mounting system BMS, for monitor holder BMS	for mounting system BMS, for monitor holder BMS
	Stainless steel	Cast aluminum	POM	Aluminum	Aluminum
	37 x 40.5 x 50 mm	60 x 50 x 60 mm	56 x 30 x 40 mm	75 x 75 x 108 mm	40 x 74 x 108 mm
	Screws, Clamps	Screws, clamps	Screws, clamps	Screws, Clamps	Screws, Clamps
	–	–	–	–	–
	Ecolab	–	–	–	–
	Page 445	Page 445	Page 445	Page 445	Page 445

	BAM002Y BMS CUJ-P-D12-R040-00	BAM0044 BMS CU-M-D12-I060-01	BAM01CH BMS CU-M-D12-I060-02
Principle of operation	Mounting system	Mounting system	Mounting system
Use	for mounting system BMS, for holding rods with Ø12 mm	for mounting system BMS	for mounting system BMS
Material	PA	Stainless steel (1.4301)	Stainless steel (1.4301)
Dimension	50 x 65 x 35 mm	76.4 x 10 x 30 mm	76.4 x 10 x 30 mm
Mounting	Screws, clamps	Screws, clamps	Screws, clamps
Additional features	—	—	—
Approval/Conformity	—	—	—
Productview	Page 446	Page 446	Page 446

	BAM03AN BAM IA-XA-033-04-R	BAM032T BAM IA-XA-031-200-R	BAM0031 BMS CS-M-D12-IZ
Principle of operation	Cable Spacer	Cable ties	Mounting system
Use	for 2x cables D5,5-6,9 mm + 2x cables D9,3-11,6 mm	for cable fastener	for mounting system BMS, for holding rods with Ø12 mm
Material	PP	PP	Zinc
Dimension	53.9 x 62.6 mm	21 x 1.5 x 200 mm	Ø 27 x 37 mm
Mounting	—	—	Screws, clamps
Additional features	—	—	—
Approval/Conformity	—	—	—
Productview	Page 447	Page 447	Page 447

	BAM03CF BAM IA-XA-034-M08-A-4	BAM03CH BAM IA-XA-034-M12-A-5	BAM03AK BAM IA-XA-033-01-R	BAM03AL BAM IA-XA-033-02-R	BAM03AM BAM IA-XA-033-03-R
	Modular mounting clip for connector	Modular mounting clip for connector	Cable Spacer	Cable Spacer	Cable Spacer
	for M8 connector	for M12 connector	for 4x cables D4,3-5,4 mm	for 4x cables D5,5-6,9 mm	for 2x cables D5,5-6,9 mm + 2x cables D7,7-8 mm
	PPO schwarz	PPO schwarz	PP	PP	PP
	15 x 17 x 19 mm	20 x 21 x 19 mm	43.2 x 61.6 mm	43.9 x 61.6 mm	52.4 x 61.6 mm
	Screw M4	Screw M5	–	–	–
	–	–	–	–	–
	–	–	–	–	–
	Page 446	Page 446	Page 446	Page 446	Page 446

	BAM003Y BMS CS-M-D12-IZ-01	BAM035N BMS CS-M-D12-IZ-02	BAM035A BMS CS-M-D30-BZ-03	BAM002Z BMS CC-M-D12-B-00	BAM035P BMS CC-M-D12-B-03
	Mounting system	Mounting system	Mounting system	Mounting system	Mounting system
	for mounting system BMS, for holding rods with Ø12 mm	for mounting system BMS, for holding rods with Ø12 mm	for mounting system BMS, for holding rods with Ø30 mm	for mounting system BMS, for holding rods with Ø12 mm	for mounting system BMS, for holding rods with Ø12 mm
	Stainless steel (1.4301)	Chrome-plated zinc, matt	Cast aluminum	Aluminum Anodized	Chrome-plated zinc, matt
	Ø 27 x 37 mm	Ø 27 x 39.1 mm	Ø 30 x 59 mm	55 x 20 x 20 mm	55 x 20 x 20 mm
	Screws, clamps	Clamps	Screws, clamps	Screws, clamps	Clamps
	–	–	–	–	–
	Ecolab	–	–	–	–
	Page 447	Page 447	Page 447	Page 447	Page 447

	BAM03EY BMS CC-M-D12-E-01	BAM033W BMS CC-M-D30-E-00	BAM033Y BMS CC-M-D30-E-01	
Principle of operation	Mounting system	Mounting system	Mounting system	
Use	for holding rods with Ø12 mm, for monitor holder BMS, for mounting system BMS	for holding rods with Ø30 mm, for mounting system BMS	for holding rods with Ø30 mm, for holding rods with Ø12 mm, for mounting system BMS	
Material	Stainless steel	Cast aluminum	Cast aluminum	
Dimension	25.5 x 25.5 x 64 mm	40 × 98 mm	40 × 84 mm	
Mounting	Clamps, Screws	Screws, clamps	Screws, clamps	
Additional features	—	—	—	
Approval/Conformity	Ecolab	—	—	
Productview	Page 447	Page 448	Page 448	

	BAM003W BMS KIT-V1	BAM021Y BMS RS-M-D12-0100-00	BAM002R BMS RS-M-D12-0150-00	
Principle of operation	Mounting kit equipped	Mounting system	Mounting system	
Use	for mounting system BMS	for mounting system BMS	for mounting system BMS	
Material	Aluminum Die-cast zinc Stainless steel Plastic	Aluminum Anodized	Aluminum Anodized	
Dimension	390 x 135 x 510 mm	Ø 12 x 100 mm	Ø 12 x 150 mm	
Mounting	—	Clamps	Clamps	
Additional features	—	—	—	
Approval/Conformity	—	—	—	
Productview	—	Page 448	Page 448	

	BAM003U BMS CC-P-D10-A-00	BAM002M BMS CC-P-D12-A-00	BAM01CW BMS CS-M-D12-BX08-07	BAM0343 BMS CSJ-M-D30-EX19-02	BAM003T BMS CASE-01
	Mounting system	Mounting system	Mounting system	Mounting system	Mounting kit empty
	for holding rods with Ø10 mm, for holding rods with 8x8 mm, for mounting system BMS	for holding rods with Ø12 mm, for holding rods with 10x10 mm, for mounting system BMS	for holding rods with Ø12 mm, for fork sensor BGL, for photoelectric sensors BOS 2K, for photoelectric sensors BOS 6K	for mounting system BMS, for connection plate VESA 75/100	for mounting system BMS
	POM	POM	Aluminum Anodized	PA 6.6 GF30	Aluminum Anodized
	55 x 22 x 22 mm	55 x 22 x 22 mm	37 x 20 x 30 mm	Ø 60 x 190.5 mm	390 x 135 x 510 mm
	Screws, clamps	Screws, clamps	Screws, clamps	Screws, clamps	—
	—	—	—	max. load capacity 10 Kg (static), Latches in 15° increments, 60° free swivel range	—
	—	—	—	—	—
	Page 448	Page 448	Page 448	Page 448	—

	BAM021T BMS RS-M-D12-0200-00	BAM002T BMS RS-M-D12-0250-00	BAM021W BMS RS-M-D12-0300-00	BAM021U BMS RS-M-D12-0750-00	BAM002U BMS RS-M-D12-1000-00
	Mounting system	Mounting system	Mounting system	Mounting system	Mounting system
	for mounting system BMS	for mounting system BMS	for mounting system BMS	for mounting system BMS	for mounting system BMS
	Aluminum Anodized	Aluminum Anodized	Aluminum Anodized	Aluminum Anodized	Aluminum Anodized
	Ø 12 x 200 mm	Ø 12 x 250 mm	Ø 12 x 300 mm	Ø 12 x 750 mm	Ø 12 x 1000 mm
	Clamps	Clamps	Clamps	Clamps	Clamps
	—	—	—	—	—
	—	—	—	—	—
	Page 448	Page 448	Page 448	Page 448	Page 448

	BAM033Z BMS RS-M-D30-0300-01	BAM0340 BMS RS-M-D30-0500-01	BAM0341 BMS RS-M-D30-1000-01	
Principle of operation	Mounting system	Mounting system	Mounting system	
Use	for mounting system BMS	for mounting system BMS	for mounting system BMS	
Material	Aluminum Anodized	Aluminum Anodized	Aluminum Anodized	
Dimension	Ø 30 x 300 mm	Ø 30 x 500 mm	Ø 30 x 1000 mm	
Mounting	Clamps	Clamps	Clamps	
Additional features	—	—	—	
Approval/Conformity	—	—	—	
Productview	Page 448	Page 449	Page 449	

	BAM003J BMS AD-M-003-D12/IZ	BAM0041 BMS CZ-M-D12-I-001	BAM003A BMS BS-M-D12-0250-01	
Principle of operation	Mounting system	Beam deflector	Mounting system	
Use	for mounting system BMS	for cleaning of sensors and reflectors	For BOS R-14 reflectors, for reflectors BOS R-1/R-9, for reflectors BOS R-22/R-26	
Material	Aluminum Anodized	Aluminum Anodized Plastic	Aluminum Anodized	
Dimension	Ø 30 x 10 mm	190 × 30 mm	Ø 12 x 250 mm	
Mounting	Clamps	Clamps	Clamps	
Additional features	—	—	—	
Approval/Conformity	—	—	—	
Productview	Page 449	Page 449	Page 449	

	BAM0045 BMS RS-S-D12-0150-00	BAM0046 BMS RS-S-D12-0300-00	BAM03F0 BMS RS-S-D12-0400-00	BAM03F1 BMS RS-S-D12-0600-00	BAM03F2 BMS RS-S-D12-0800-00
	Mounting system	Mounting system	Mounting system	Mounting system	Mounting system
	for mounting system BMS	for mounting system BMS	for mounting system BMS	for mounting system BMS	for mounting system BMS
	Stainless steel (1.4301)	Stainless steel (1.4301)	Stainless steel	Stainless steel	Stainless steel
	Ø 12 x 150 mm	Ø 12 x 300 mm	Ø 12 x 400 mm	Ø 12 x 600 mm	Ø 12 x 800 mm
	Clamps	Clamps	Clamps	Clamps	Clamps
	–	–	–	–	–
	Ecolab	Ecolab	Ecolab	Ecolab	Ecolab
	Page 449	Page 449	Page 449	Page 449	Page 449

	BAM033T BMS BS-M-D12-0250-05	BAM0035 BMS CR-M-D12-IS-03	BAM0042 BMS CR-M-D12-IS-04	BAM0034 BMS CR-M-D12-IU-02	BAM003N BMS CR-M-D12-IU-05
	Mounting system	Mounting system	Mounting system	Mounting system	Mounting system
	for reflectors -025-S023…, for reflectors -026-S012…, for reflectors -027-S004…, for photoelectric sensors BOS 6K	For BOS R-11 reflectors	for photoelectric sensors BOS 21M, For BOS R-9 reflectors	For BOS R-1 reflectors, For BOS R-2 reflectors, For BOS R-3 reflectors	For BOS R-1 reflectors
	–	Stainless steel	Stainless steel	Stainless steel	Stainless steel
	Ø 12 x 250 mm	93 x 34.5 x 85 mm	61.5 x 34 x 59 mm	Ø 33 x 39 mm	Ø 84 x 92.5 mm
	Screws, clamps	Clamps	Clamps	Clamps	Clamps
	–	–	–	–	–
	–	–	Ecolab	–	–
	Page 450	Page 450	Page 450	Page 450	Page 450

	BAM002L BMS CR-P-D12-AU-00	BAM0039 BMS BS-M-D12-0250-02	BAM003F BMS BS-M-D12-0250-03	
Principle of operation	Mounting system	Mounting system	Mounting system	
Use	for holding rods with Ø12 mm, for holding rods with 10x10 mm, for all reflectors with Ø20mm	for photoelectric sensors BOS Q08M, for inductive sensors BES, for photoelectric sensors BOS 2K, for photoelectric sensors BOS 5K, for photoelectric sensors BOS 6K	for photoelectric fork sensors BGL 5A, for photoelectric fork sensors BGL 10A, for photoelectric fork sensors BGL 20A, for photoelectric fork sensors BGL 30A, for photoelectric fork sensors BGL 50A	
Material	POM	Aluminum Anodized	Aluminum Anodized	
Dimension	60 x 30 x 30 mm	Ø 12 x 250 mm	Ø 12 x 250 mm	
Mounting	Screws	Clamps	Screws, clamps	
Additional features	—	—	—	
Approval/Conformity	—	—	—	
Productview	Page 450	Page 450	Page 450	

	BAM003H BMS BS-M-D12-0400-04	BAM0043 BMS CS-M-D12-B21K-04	BAM01AW BMS CS-M-D12-B23K-05	BAM003C BMS CS-M-D12-BX05-02	BAM0040 BMS CS-M-D12-BX06-03
	Mounting system	Mounting system	Mounting system	Mounting system	Mounting system
	for photoelectric fork sensors BGL 80A/120A, for photoelectric fork sensors BGL 180A/220A	for photoelectric sensors BOS 21M	for photoelectric sensors BOS 23K, for photoelectric sensors BOS 26K	for photoelectric sensors BOS 21M, for photoelectric sensors BOS 23K, for photoelectric sensors BOS 25K, for photoelectric sensors BOS 26K, for photoelectric sensors BOS 50K, for photoelectric sensors BOS 64K, for photoelectric distance sensors BOD 63M, for photoelectric distance sensors BOD 66M, For BOS R-9 reflectors, For BOS R-22 reflectors, For BOS R-34 reflectors, For BOS R-36 reflectors, For BOS R-44 reflectors, For BOS R-46 reflectors	for photoelectric sensors BOS 2K, for photoelectric sensors BOS 5K, for photoelectric sensors BOS 6K
	Aluminum Anodized	Zinc nickel plated	Stainless steel	Aluminum Anodized	Stainless steel
	Ø 12 x 400 mm	88 x 20 x 56 mm	93 x 30 x 55 mm	120 x 5 x 60 mm	79 x 23 x 28 mm
	Clamps	Clamps	Clamps	Screws, clamps	Screws, clamps
	–	–	–	–	–
	–	–	Ecolab	–	Ecolab
	Page 451	Page 451	Page 451	Page 451	Page 451

	BAM01AY BMS CS-M-D12-BX07-06	BAM01F3 BMS CS-M-D12-BX10-08	BAM01F2 BMS CS-M-D12-BX11-09	
Principle of operation	Mounting system	Mounting system	Mounting system	
Use	Mounting bracket for BIS M-400x, for photoelectric sensors BOS 50K, For BOS R-11 reflectors	for angle sensors BWL, for fork sensor BGL	for line light BVS, for background lights BVS, for angle sensors BWL D	
Material	Stainless steel (1.4571)	Stainless steel	Stainless steel	
Dimension	93 x 34.5 x 85 mm	61 x 34 x 36 mm	185 x 21 x 34 mm	
Mounting	Screws, clamps	Screws, clamps	Screws, clamps	
Additional features	—	—	—	
Approval/Conformity	—	—	—	
Productview	Page 451	Page 451	Page 451	

	BAM0032 BMS CS-M-D12-ID18-01	BAM003L BMS CS-M-D12-ID24-01	BAM0033 BMS CS-M-D12-ID30-01	
Principle of operation	Mounting system	Mounting system	Mounting system	
Use	For M18 sensors	For M24 sensors	For M30 sensors	
Material	Stainless steel	Stainless steel	Stainless steel	
Dimension	Ø 28 x 34 mm	Ø 35 x 41.5 mm	Ø 42 x 47 mm	
Mounting	Clamps	Clamps	Clamps	
Additional features	—	—	—	
Approval/Conformity	Ecolab	Ecolab	Ecolab	
Productview	Page 452	Page 452	Page 452	

BAM0277 BMS CS-M-D12-BX17-11
Mounting system
for line light BVS
Stainless steel
75 x 3 x 44 mm
Screws
–
–
Page 452

BAM024T BMS CS-M-D12-BZ
Mounting system
for mounting system BMS, for holding rods with Ø12 mm
Zinc chrome plated, matte
45.5 x 24 x 30 mm
Screws, clamps
–
–
Page 452

BAM0036 BMS CS-M-D12-ID08-01
Mounting system
For M08 sensors
Stainless steel
Ø 28 x 34 mm
Clamps
–
Ecolab
Page 452

BAM0037 BMS CS-M-D12-ID12-01
Mounting system
For M12 sensors
Stainless steel
Ø 28 x 34 mm
Clamps
–
Ecolab
Page 452

BAM003K BMS CS-M-D12-ID16-01
Mounting system
For M16 sensors
Stainless steel
Ø 33 x 36.5 mm
Clamps
–
Ecolab
Page 452

BAM003M BMS CS-M-D12-ID36-01
Mounting system
For M36 sensors
Stainless steel
Ø 48 x 54 mm
Clamps
–
Ecolab
Page 453

BAM003P BMS CS-M-D12-IQ40-02
Mounting system
for capacitive sensors BCS Q40, for inductive sensors BES Q40, for inductive couplers BIC Q40
Stainless steel
102 x 40 x 60 mm
Screws, clamps
–
–
Page 453

BAM003R BMS CS-M-D12-IQ40-03
Mounting system
for capacitive sensors BCS Q40, for inductive sensors BES Q40, for inductive couplers BIC Q40
Stainless steel
121 x 3 x 60 mm
Screws, clamps
–
–
Page 453

BAM01UL BMS CS-M-D12-IX14-01
Mounting system
for capacitive sensors BCS Q40, for inductive sensors BES Q40
Stainless steel
39 x 16 x 34 mm
Clamps
–
–
Page 453

BAM002K BMS CS-P-D12-AD08-00
Mounting system
for sensors Ø8 mm, For M08 sensors, for holding rods with Ø12 mm, for holding rods with 10x10 mm
POM
60 x 30 x 30 mm
Clamps
–
–
Page 453

	BAM002N BMS CS-P-D12-AD12-00	BAM002P BMS CS-P-D12-AD18-00		
Principle of operation	Mounting system	Mounting system		
Use	for sensors Ø12 mm, For M12 sensors, for holding rods with Ø12 mm, for holding rods with 10x10 mm	for sensors Ø18 mm, For M18 sensors, for holding rods with Ø12 mm, for holding rods with 10x10 mm		
Material	POM	POM		
Dimension	60 x 30 x 30 mm	60 x 30 x 30 mm		
Mounting	Clamps	Clamps		
Additional features	—	—		
Approval/Conformity	—	—		
Productview	Page 453	Page 453		

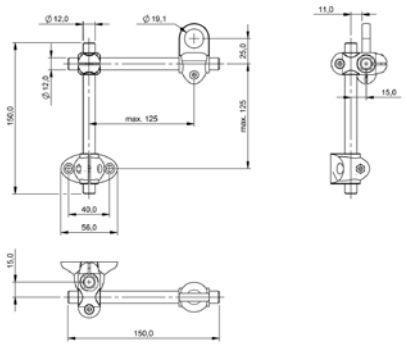

SET011L

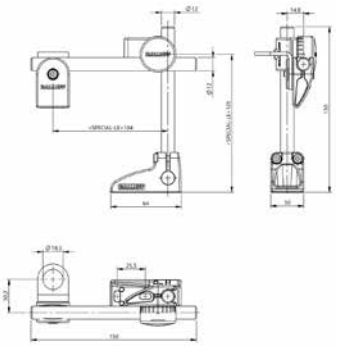

SET011M

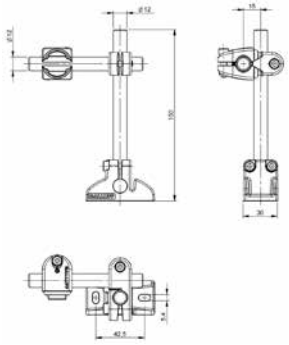

SET01NU

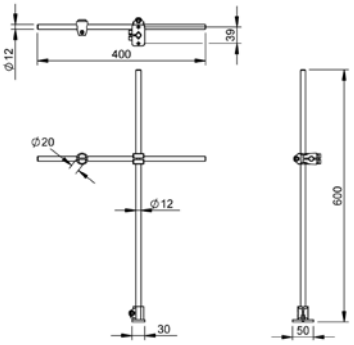

SET01U1

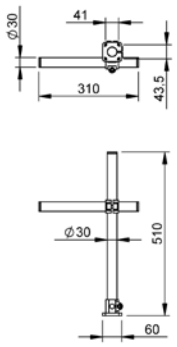

SET01KE

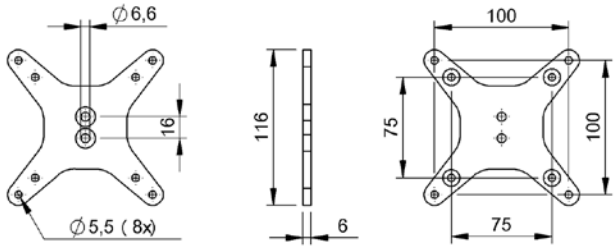

BAM033K

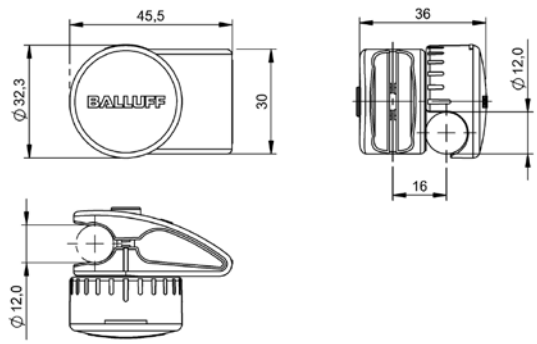

BAM024R

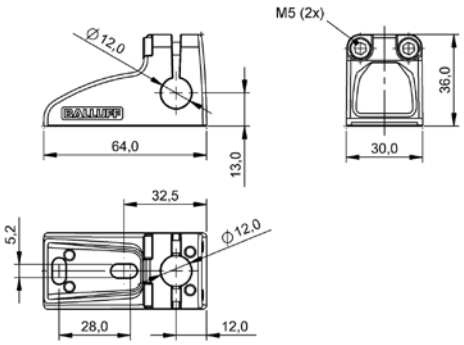

BAM024P

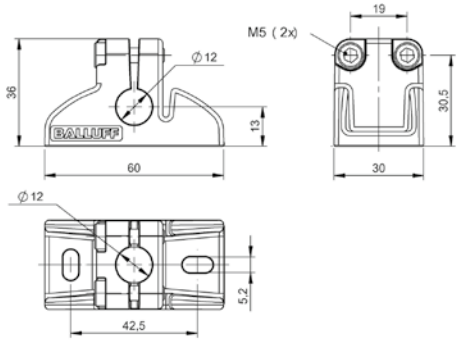

BAM0275

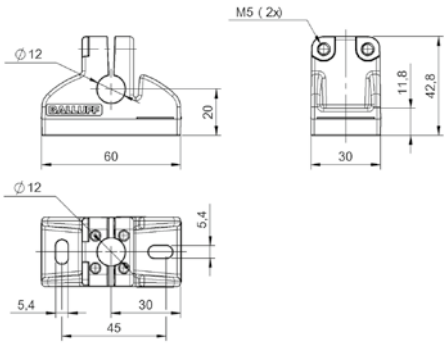

BAM02JT

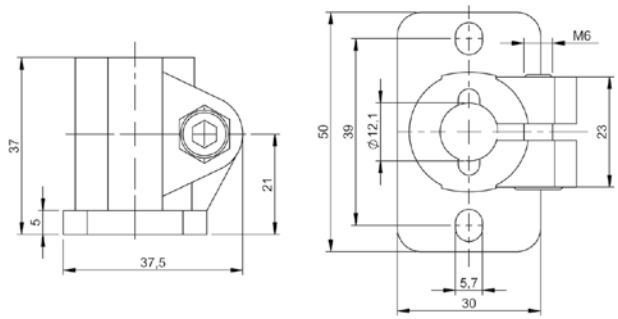

BAM03EU

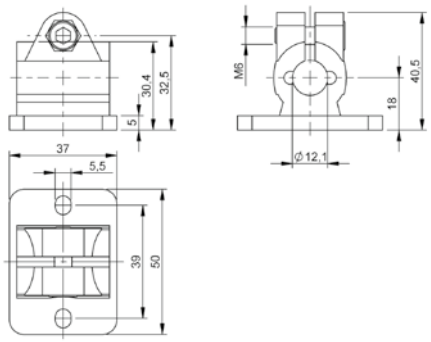

BAM03EW

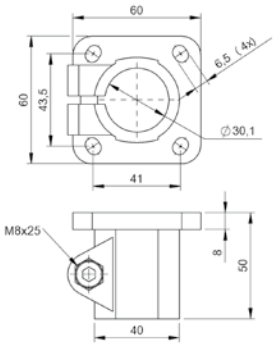

BAM033U

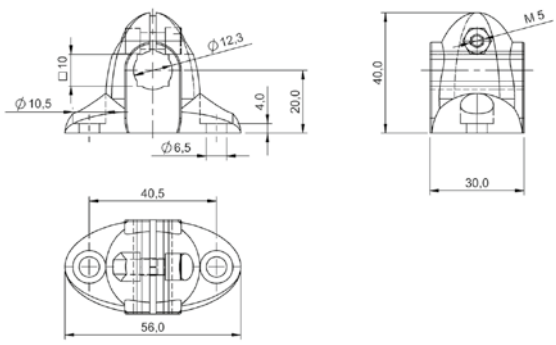

BAM002J

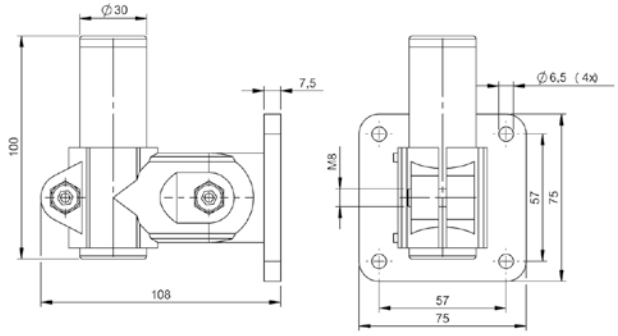

BAM034K

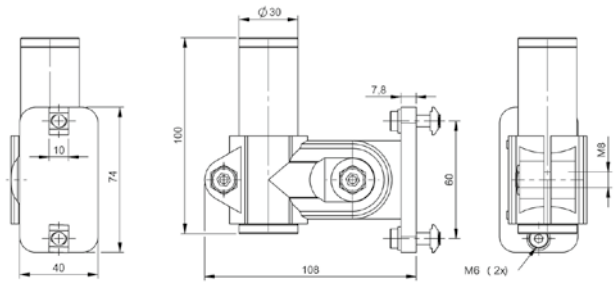

BAM034L

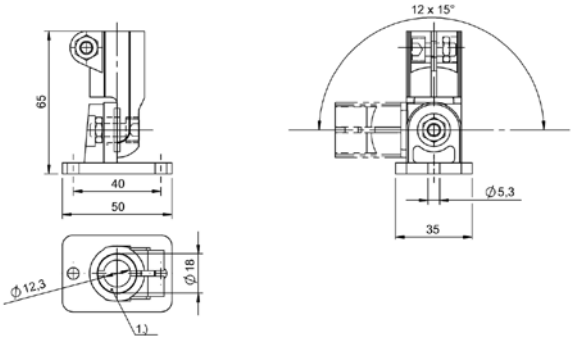

1) Reducing sleeve

BAM002Y

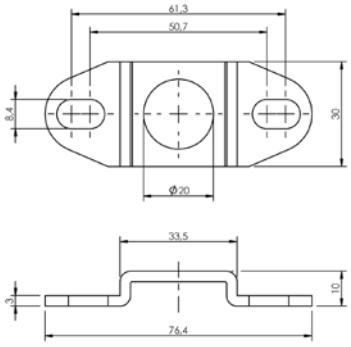

BAM0044

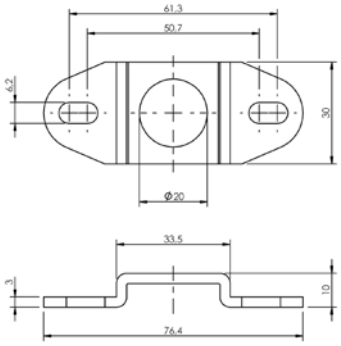

BAM01CH

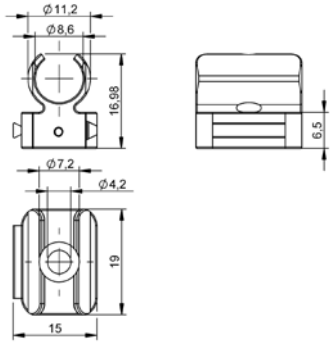

BAM03CF

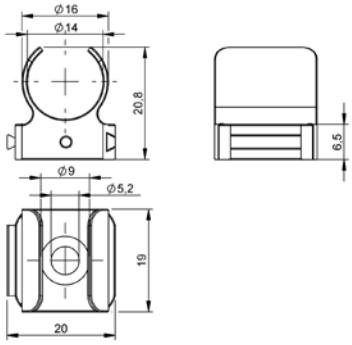

BAM03CH

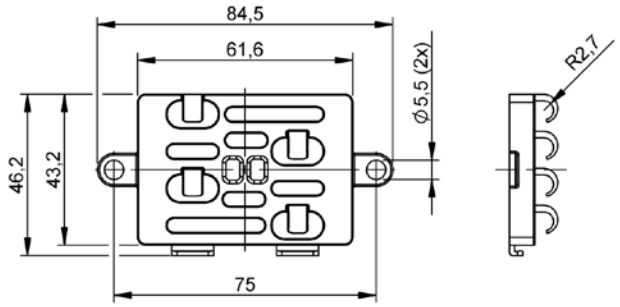

BAM03AK

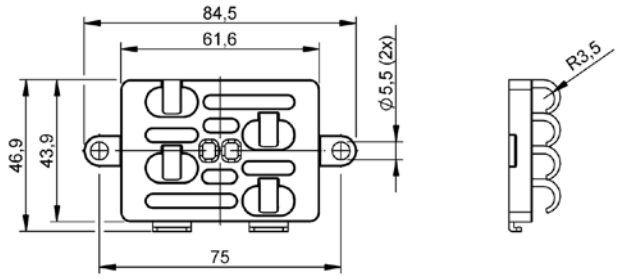

BAM03AL

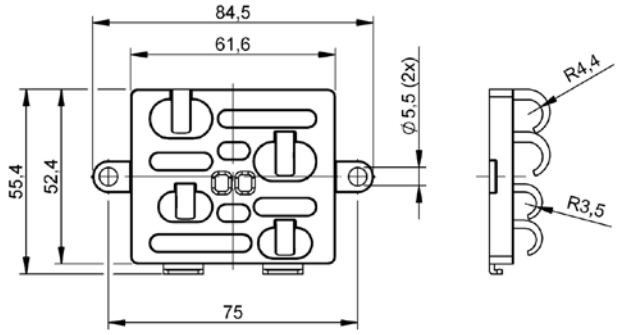

BAM03AM

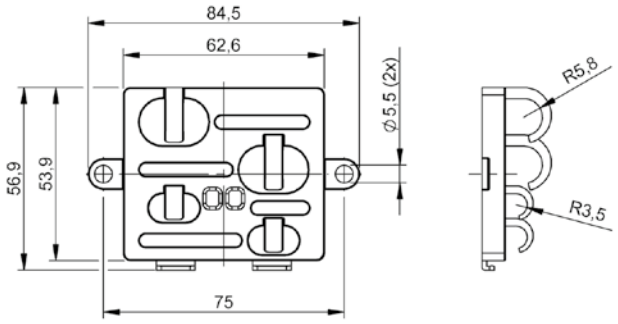

BAM03AN

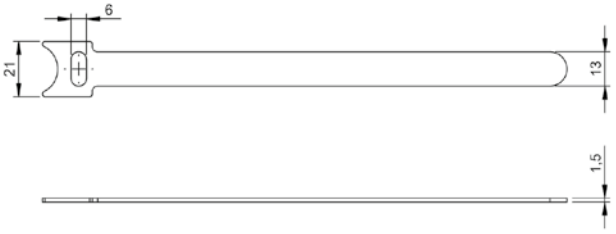

BAM032T

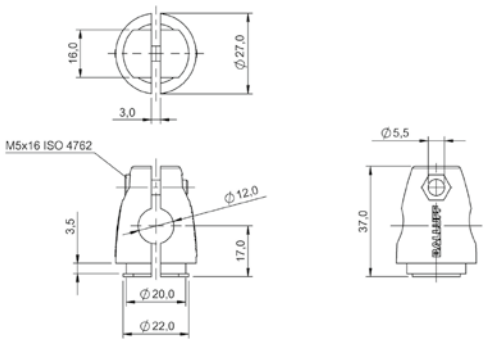

BAM0031, BAM003Y

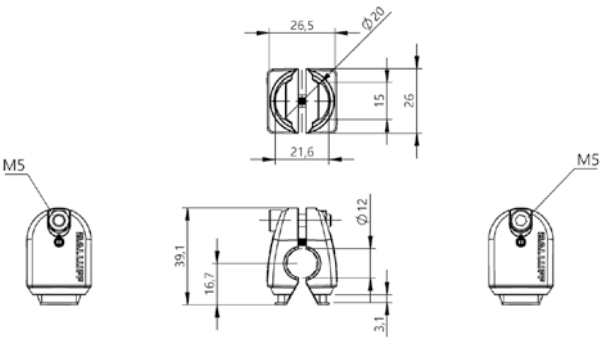

BAM035N

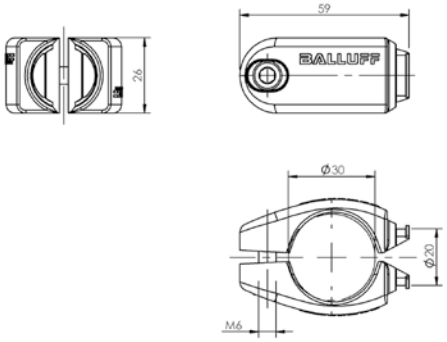

BAM035A

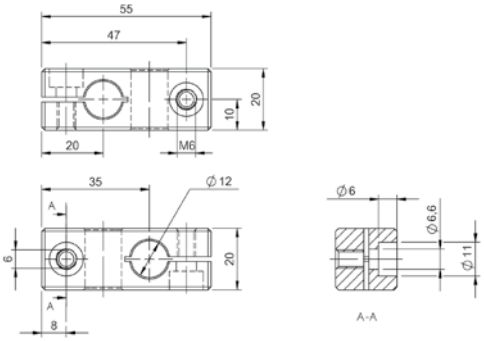

BAM002Z

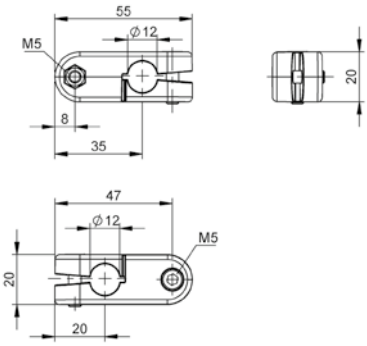

BAM035P

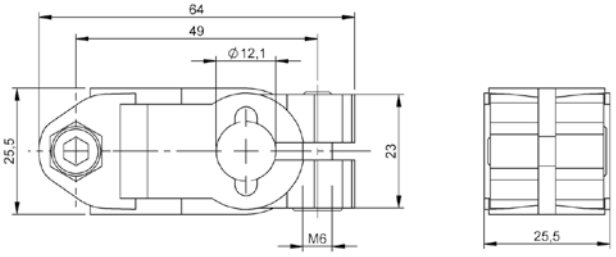

BAM03EY

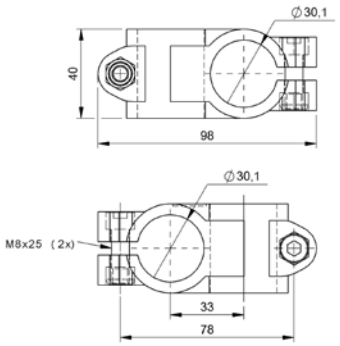

BAM033W

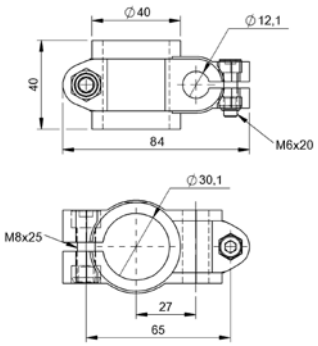

BAM033Y

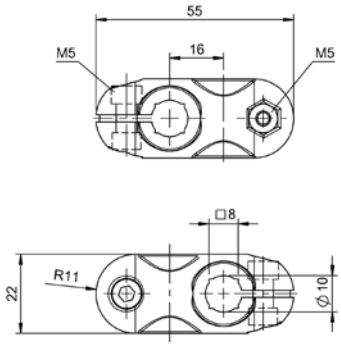

BAM003U

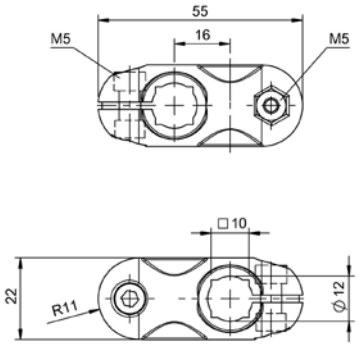

BAM002M

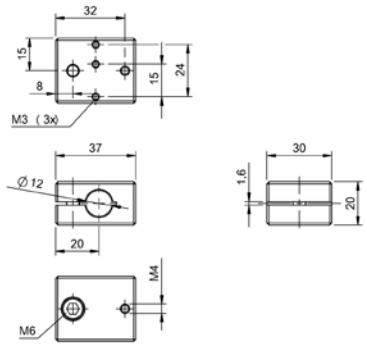

BAM01CW

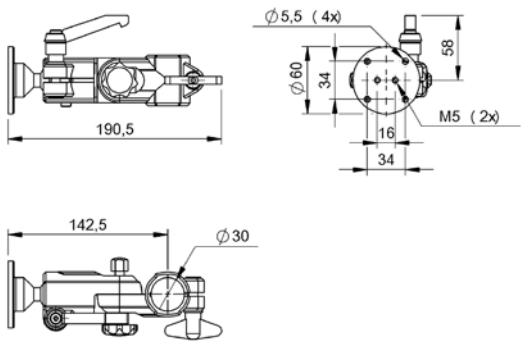

BAM0343

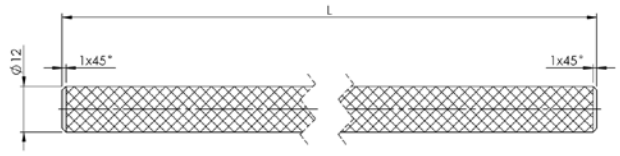

BAM021Y, BAM002R, BAM021T, BAM002T, BAM021W, BAM021U, BAM002U

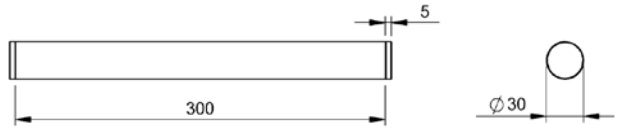

BAM033Z

BAM0340

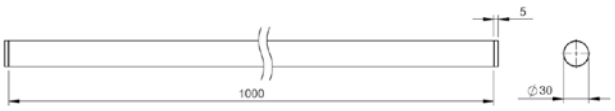

BAM0341

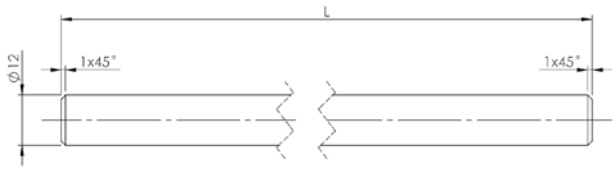

BAM0045, BAM0046

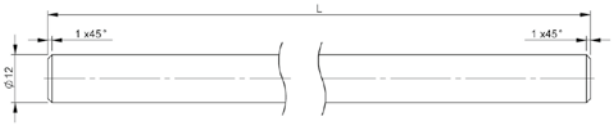

BAM03F0, BAM03F1, BAM03F2

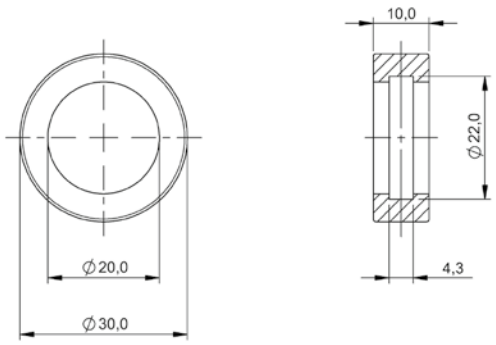

BAM003J

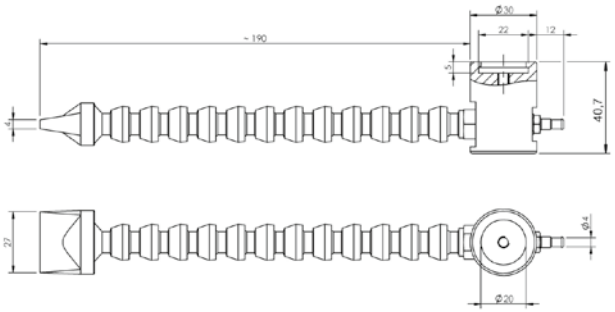

BAM0041

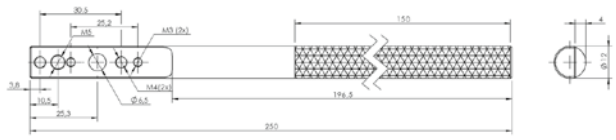

BAM003A

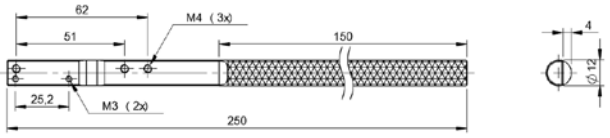

BAM033T

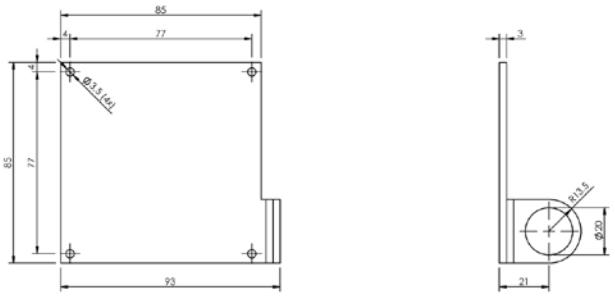

BAM0035

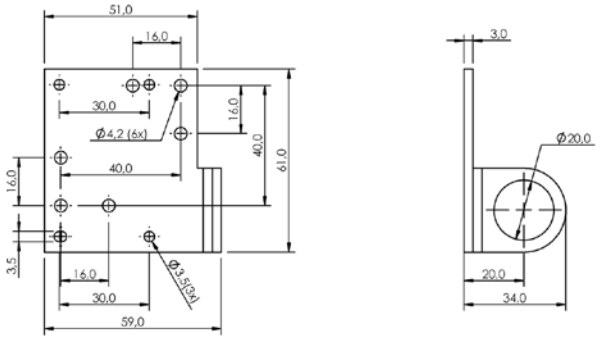

BAM0042

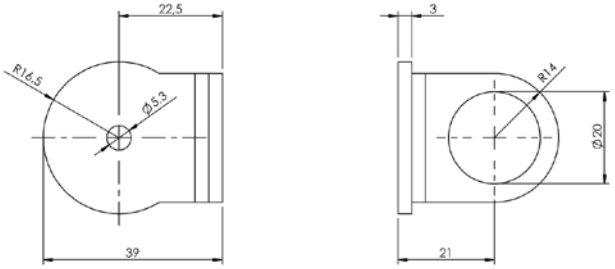

BAM0034

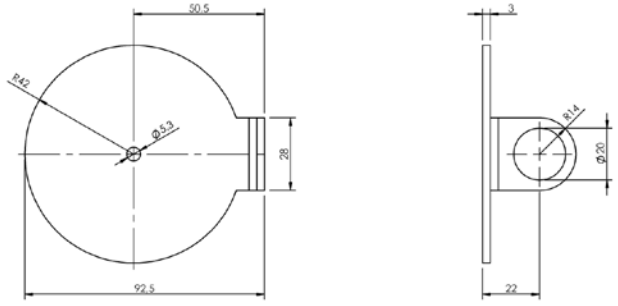

BAM003N

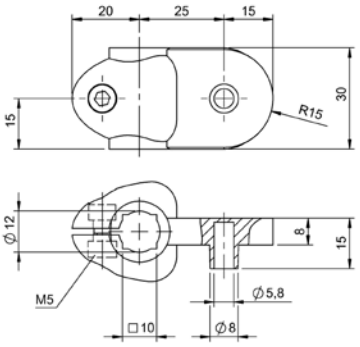

BAM002L

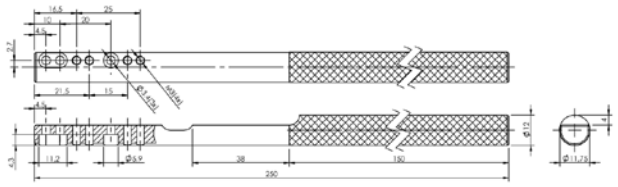

BAM0039

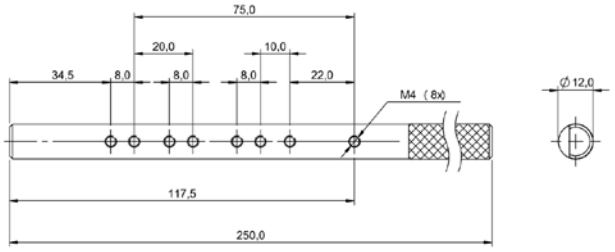

BAM003F

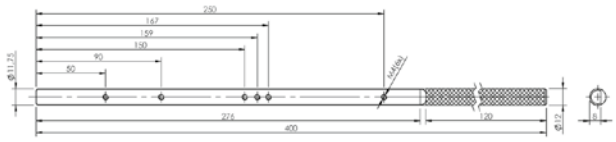

BAM003H

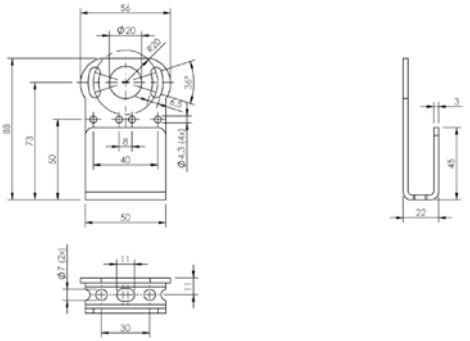

BAM0043

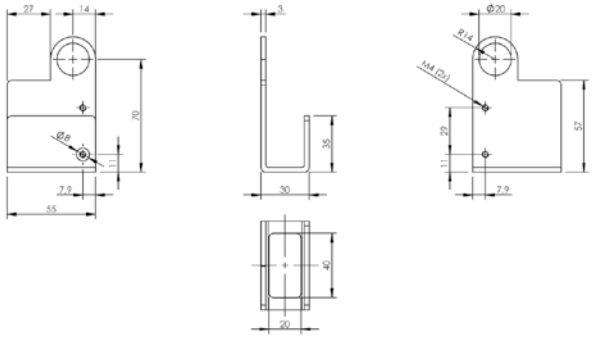

BAM01AW

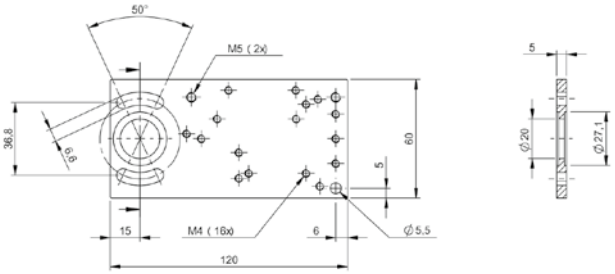

BAM003C

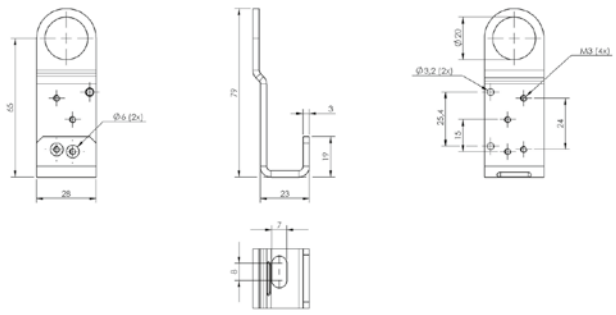

BAM0040

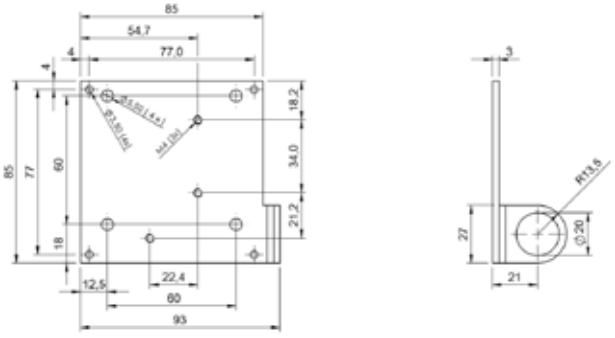

BAM01AY

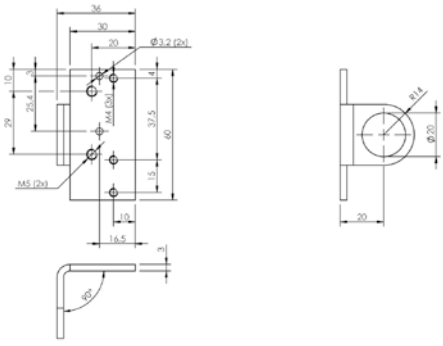

BAM01F3

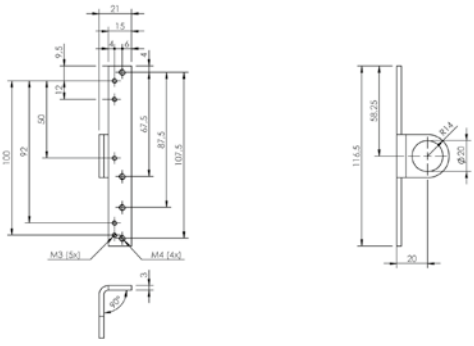

BAM01F2

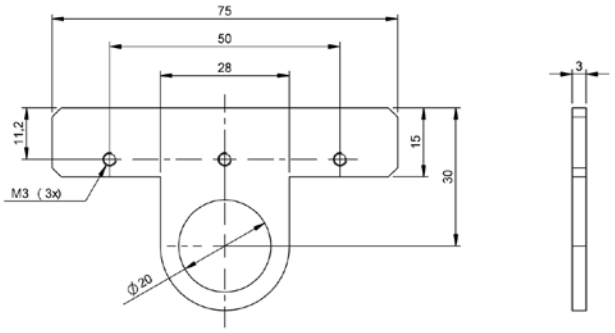

BAM0277

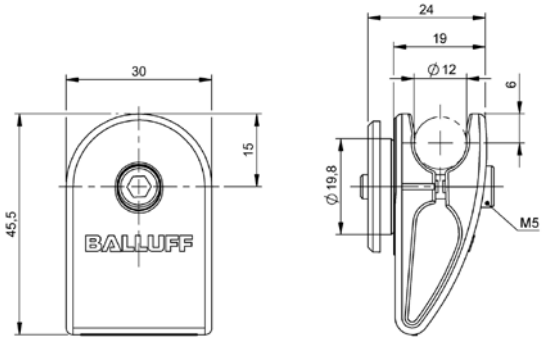

BAM024T

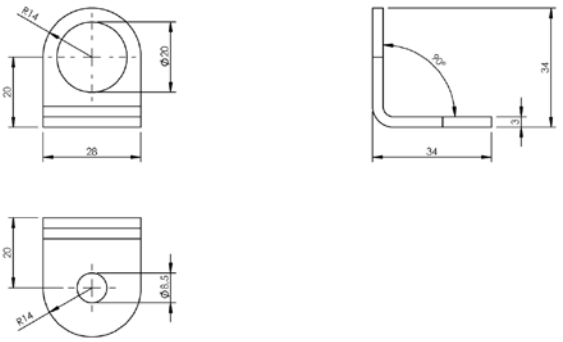

BAM0036

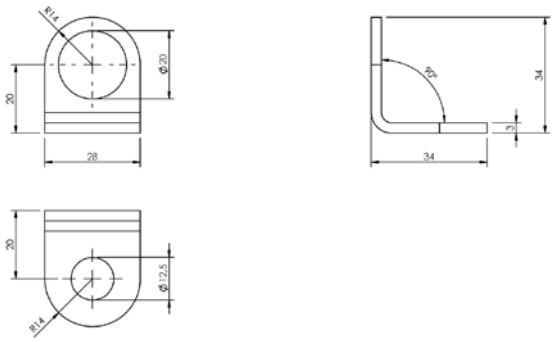

BAM0037

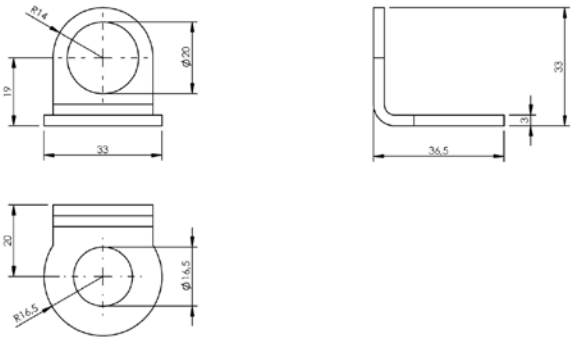

BAM003K

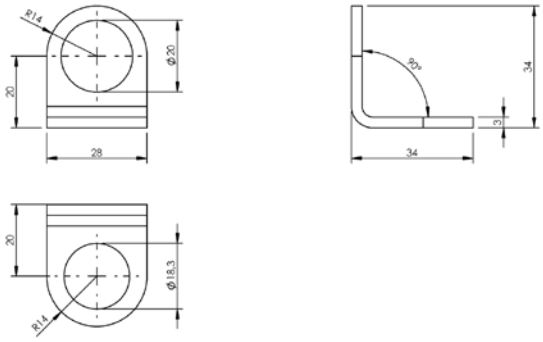

BAM0032

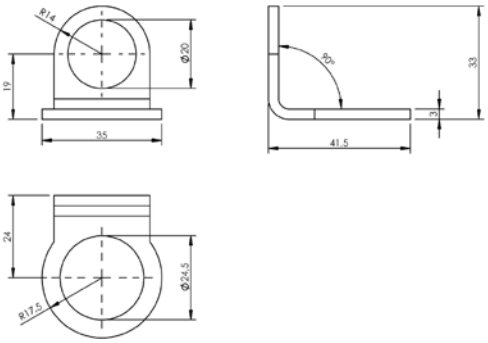

BAM003L

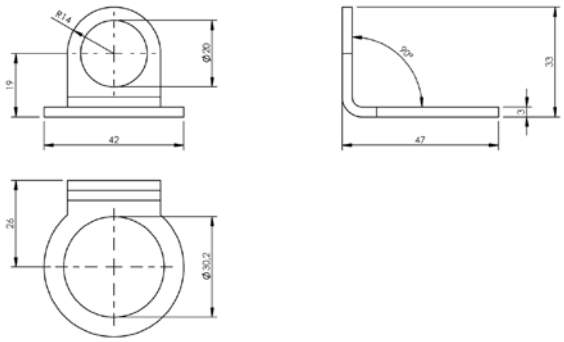

BAM0033

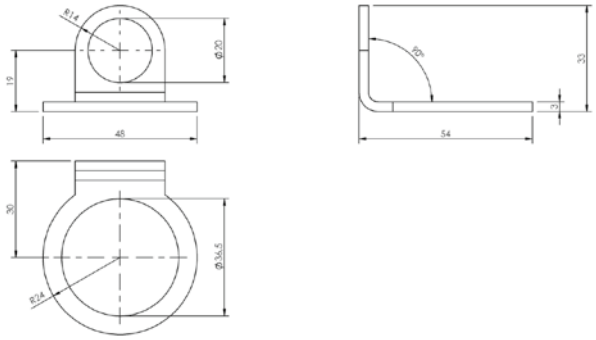

BAM003M

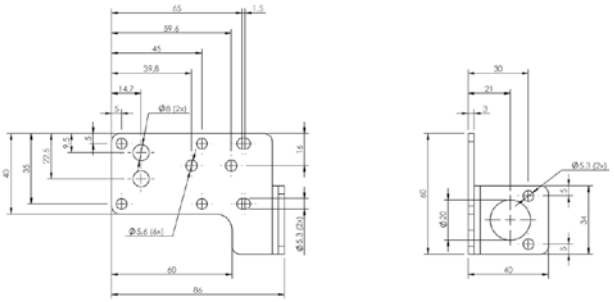

BAM003P

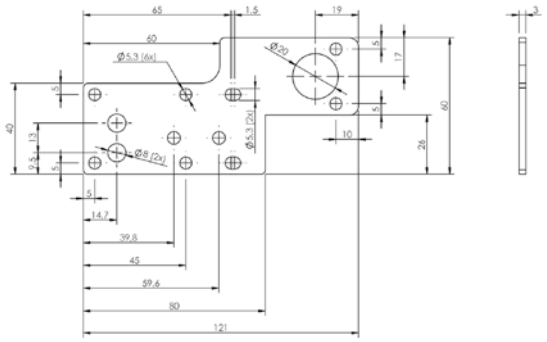

BAM003R

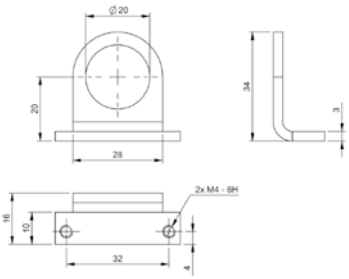

BAM01UL

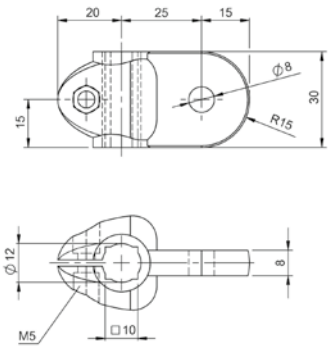

BAM002K

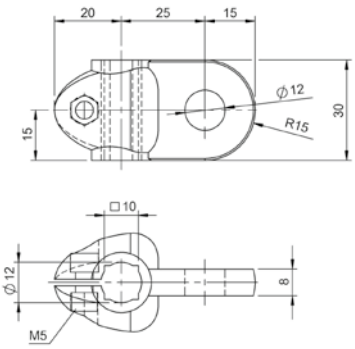

BAM002N

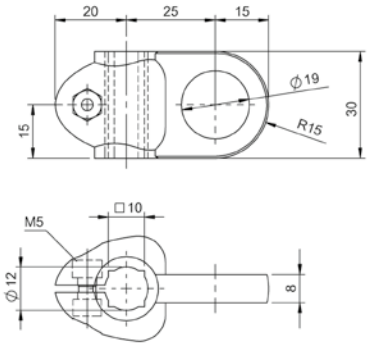

BAM002P

	BAM0099 BES 05,0-KH-2S	BAM0313 BAM MC-XA-023-D08,0-2-FS	BAM0318 BAM MC-XA-023-D08,0-2-FXL/W	
Use	For sensors Ø5 mm, for M05 sensors, fastening length 30 mm and longer	For M08 sensors, for sensors Ø8 mm, fastening length 32 mm and longer	For M08 sensors, for sensors Ø8 mm, fastening length 50 mm and longer	
Material	Stainless steel (1.4104)	Brass nickel plated	Brass, PTFE coated	
Dimension	Ø 13 x 24 mm	Ø 19.5 x 28 mm	Ø 19.5 x 48 mm	
Mounting	Screws, terminals	Screws, terminals	Screws, terminals	
Additional features	—	—	Weld immune	
Productview	Page 460	Page 460	Page 460	

	BAM00AR BES 08,0-KH-6S	BAM01UT BAM MC-XA-020-D12,0-2-FS/W	BAM0247 BAM MC-XA-023-D12,0-2-FM/W	
Use	For sensors Ø8 mm, for M08 sensors, fastening length 32 mm and longer	For sensors Ø12 mm, for M12 sensors, fastening length 32 mm and longer	For sensors Ø12 mm, for M12 sensors, fastening length 36 mm and longer	
Material	Stainless steel (1.4305)	Brass, PTFE coated	Brass, PTFE coated	
Dimension	Ø 17 x 32 mm	Ø 22 x 34 mm	Ø 23 x 34 mm	
Mounting	Screws, terminals	Screws, terminals	Screws, terminals	
Additional features	—	Weld immune	Weld immune	
Productview	Page 460	Page 460	Page 461	

	BAM0310 BAM MC-XA-023-D08,0-4-FS/W	BAM00AE BES 08,0-KH-2L	BAM00AH BES 08,0-KH-2S	BAM00AK BES 08,0-KH-2S/W	BAM00AL BES 08,0-KH-3L
	For M08 sensors, for sensors Ø8 mm, fastening length 32 mm and longer	For sensors Ø8 mm, for M08 sensors, fastening length 50 mm and longer	For sensors Ø8 mm, for M08 sensors, fastening length 32 mm and longer	For sensors Ø8 mm, for M08 sensors, fastening length 32 mm and longer	For M08 sensors, for sensors Ø8 mm, fastening length 50 mm and longer
	Stainless steel (1.4104), coated, PTFE	Brass nickel plated	Brass nickel plated	Brass, PTFE coated	PBT nickel plated
	Ø 19.5 x 28 mm	Ø 17 x 48.5 mm	Ø 17 x 32 mm	Ø 17 x 32 mm	Ø 17 x 48.5 mm
	Screws, terminals	Screws, terminals	Screws, terminals	Screws, terminals	Screws, terminals
	Weld immune	—	—	Weld immune	—
	Page 460	Page 460	Page 460	Page 460	Page 460

	BAM0246 BAM MC-XA-023-D12,0-2-FS	BAM024E BAM MC-XA-024-D12,0-2-FM/W	BAM024F BAM MC-XA-024-D12,0-2-FXL/W	BAM00CY BES 12,0-KH-2L	BAM00CZ BES 12,0-KH-2L/W
	For sensors Ø12 mm, for M12 sensors, fastening length 32 mm and longer	For sensors Ø12 mm, for M12 sensors, fastening length 40 mm and longer	For sensors Ø12 mm, for M12 sensors, fastening length 50 mm and longer	For sensors Ø12 mm, for M12 sensors, fastening length 46 mm and longer	For sensors Ø12 mm, for M12 sensors, fastening length 46 mm and longer
	Brass nickel plated	Brass, PTFE coated	Brass, PTFE coated	Brass nickel plated	Brass, PTFE coated
	Ø 23 x 30.5 mm	Ø 23 x 38 mm	Ø 23 x 48.5 mm	Ø 22 x 44.5 mm	Ø 22 x 44.5 mm
	Screws, terminals	Screws, terminals	Screws, terminals	Screws, terminals	Screws, terminals
	—	Weld immune	Weld immune	—	Weld immune
	Page 461	Page 461	Page 461	Page 461	Page 461

	BAM00E0 BES 12,0-KH-2S	BAM00E1 BES 12,0-KH-2S/W	BAM00E2 BES 12,0-KH-3L	
Use	For sensors Ø12 mm, for M12 sensors, fastening length 36 mm and longer	For sensors Ø12 mm, for M12 sensors	For M12 sensors, f astening length 46 mm and longer	
Material	Brass nickel plated	Brass, PTFE coated	PBT	
Dimension	Ø 22 x 34 mm	Ø 22 x 34 mm	Ø 22 x 44.5 mm	
Mounting	Screws, terminals	Screws, terminals	Screws, terminals	
Additional features	—	Weld immune	—	
Productview	Page 461	Page 461	Page 461	

	BAM00FR BES 18,0-KH-2M	BAM00FT BES 18,0-KH-2S	BAM00FW BES 18,0-KH-2S/W	
Use	For sensors Ø18 mm, for M18 sensors, fastening length 50 mm and longer	For sensors Ø18 mm, for M18 sensors, fastening length 36 mm and longer	For sensors Ø18 mm, for M18 sensors, fastening length 40 mm and longer	
Material	Brass nickel plated	Brass nickel plated	Brass, PTFE coated	
Dimension	Ø 30 x 48.5 mm	Ø 30 x 36 mm	Ø 30 x 36 mm	
Mounting	Screws, terminals	Screws, terminals	Screws, terminals	
Additional features	—	—	Weld immune	
Productview	Page 462	Page 462	Page 462	

	BAM022L BAM MC-XA-023-D18,0-2-FL	BAM022K BAM MC-XA-023-D18,0-2-FS	BAM022M BAM MC-XA-024-D18,0-2-FM/W	BAM00FN BES 18,0-KH-2L	BAM00FP BES 18,0-KH-2L/W
	For sensors Ø18 mm, for M18 sensors, fastening length 50 mm and longer	For sensors Ø18 mm, for M18 sensors, fastening length 40 mm and longer	For sensors Ø18 mm, for M18 sensors, fastening length 50 mm and longer	For sensors Ø18 mm, for M18 sensors, fastening length 50 mm and longer	For sensors Ø18 mm, for M18 sensors, fastening length 60 mm and longer
	Brass nickel plated	Brass nickel plated	Brass coated, PTFE LCP	Brass nickel plated	Brass, PTFE coated
	Ø 32 x 48.5 mm	Ø 32 x 36 mm	Ø 32 x 46 mm	Ø 30 x 58 mm	Ø 30 x 58 mm
	Screws, terminals	Screws, terminals	Screws, terminals	Screws, terminals	Screws, terminals
	–	–	Weld immune	–	Weld immune
	Page 461	Page 462	Page 462	Page 462	Page 462

	BAM00FY BES 18,0-KH-3L	BAM0264 BAM MC-XA-023-D30,0-2-FS	BAM0265 BAM MC-XA-023-D30,0-2-FXL	BAM024C BAM MC-XA-023-D30,0-2-FXL/W	BAM024H BAM MC-XA-024-D30,0-2-FM/W
	For M18 sensors, fastening length 60mm and longer	For sensors Ø30 mm, for M30 sensors, fastening length 40 mm and longer	For sensors Ø30 mm, for M30 sensors, fastening length 60 mm and longer	For sensors Ø30 mm, for M30 sensors, fastening length 60 mm and longer	For sensors Ø30 mm, for M30 sensors, fastening length 50 mm and longer
	PBT	Brass nickel plated	Brass nickel plated	Brass, PTFE coated	Brass, PTFE coated
	Ø 30 x 59.5 mm	Ø 45 x 36 mm	Ø 45 x 58 mm	Ø 45 x 58 mm	Ø 45 x 48 mm
	Screws, terminals	Screws, terminals	Screws, terminals	Screws, terminals	Screws, terminals
	–	–	–	Weld immune	Weld immune
	Page 462	Page 462	Page 462	Page 462	Page 463

	BAM00J4 BES 30,0-KH-2L	BAM00J5 BES 30,0-KH-2L/W	BAM00J6 BES 30,0-KH-2S	
Use	For sensors Ø30 mm, for M30 sensors, fastening length 60 mm and longer	For sensors Ø30 mm, for M30 sensors, fastening length 60 mm and longer	For sensors Ø30 mm, for M30 sensors, fastening length 36 mm and longer	
Material	Brass nickel plated	Brass, PTFE coated	Brass nickel plated	
Dimension	Ø 41 x 58 mm	Ø 41 x 58 mm	Ø 41 x 36 mm	
Mounting	Screws, terminals	Screws, terminals	Screws, terminals	
Additional features	—	Weld immune	—	
Productview	Page 463	Page 463	Page 463	

	BAM00J7 BES 30,0-KH-2S/W				
	For sensors Ø30 mm, for M30 sensors, fastening length 36 mm and longer				
	Brass, PTFE coated				
	Ø 41 x 36 mm				
	Screws, terminals				
	Weld immune				
	Page 463				

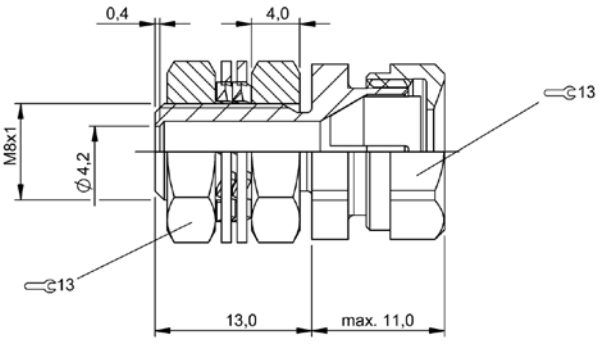

BAM0099

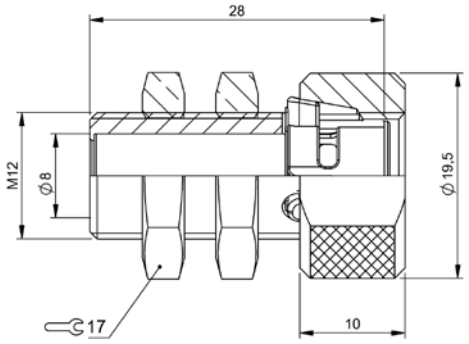

BAM0313, BAM0310

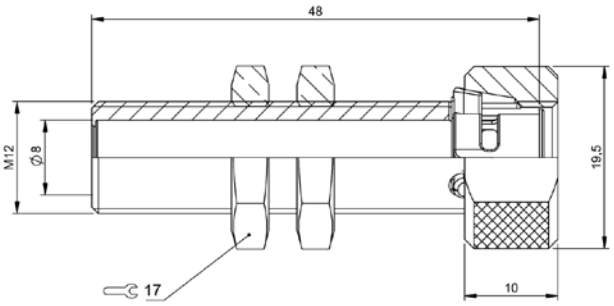

BAM0318

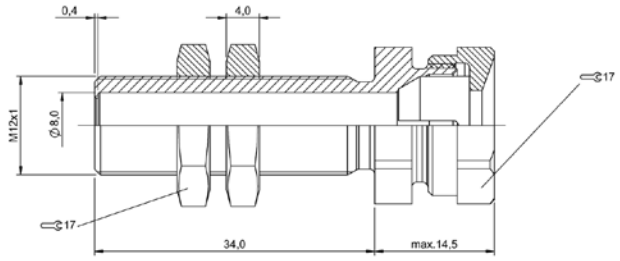

BAM00AE

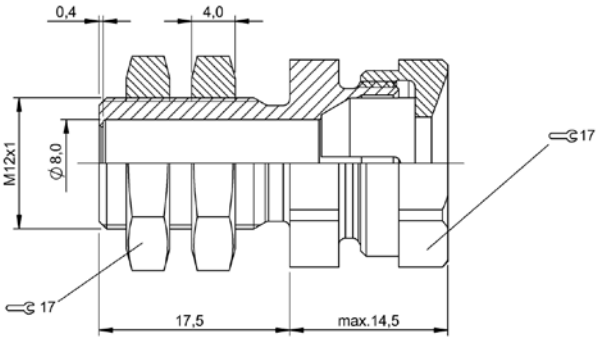

BAM00AH, BAM00AK

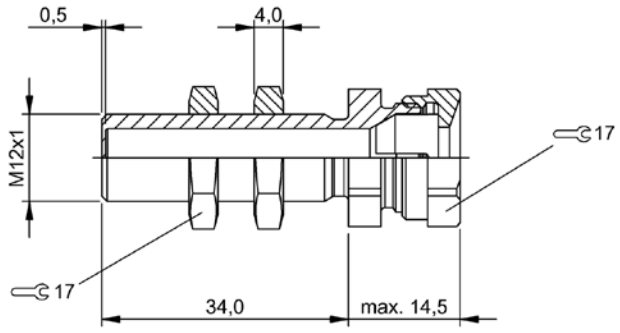

BAM00AL

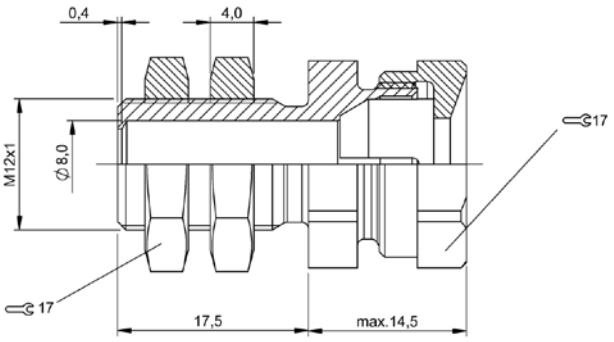

BAM00AR

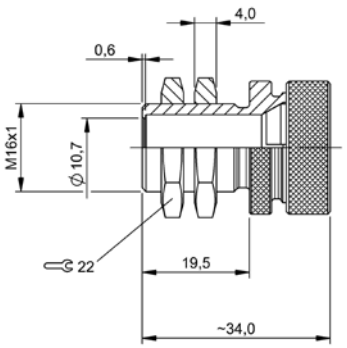

BAM01UT

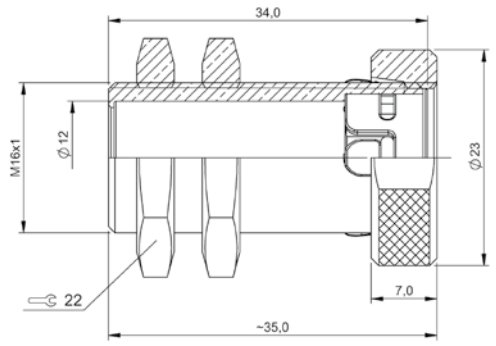

BAM0247

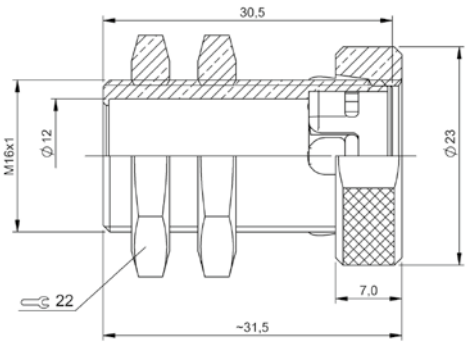

BAM0246

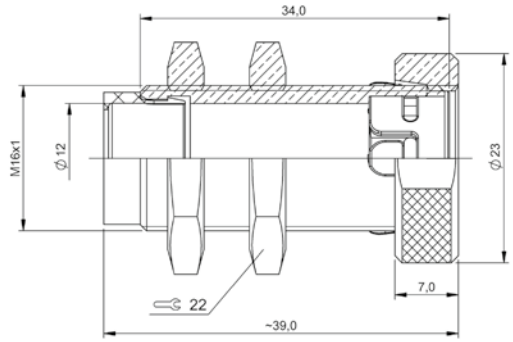

BAM024E

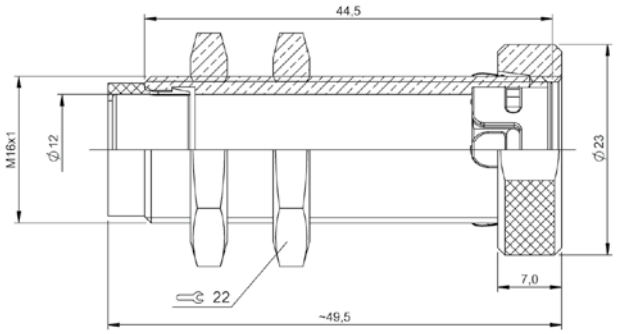

BAM024F

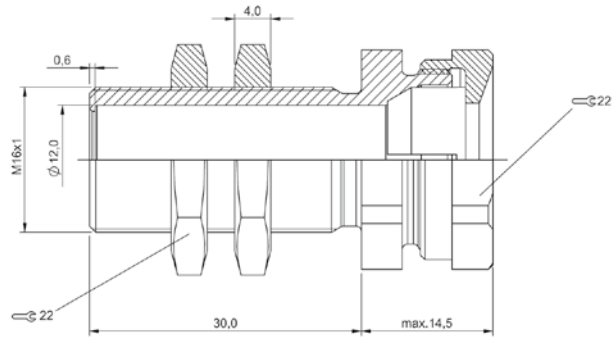

BAM00CY, BAM00CZ

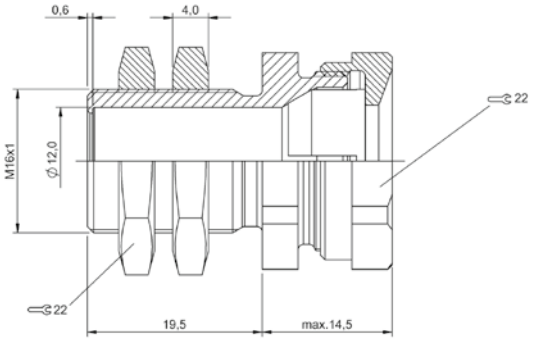

BAM00E0, BAM00E1

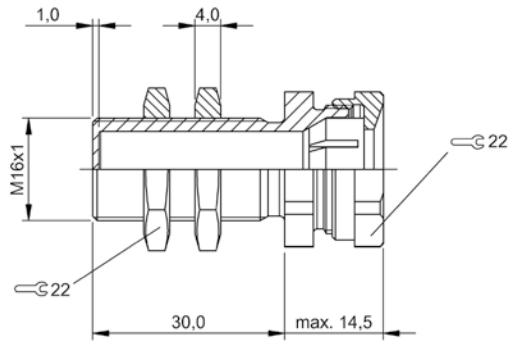

BAM00E2

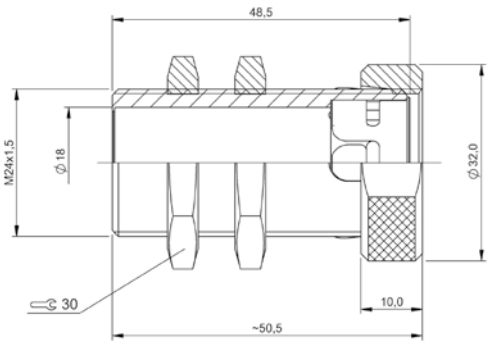

BAM022L

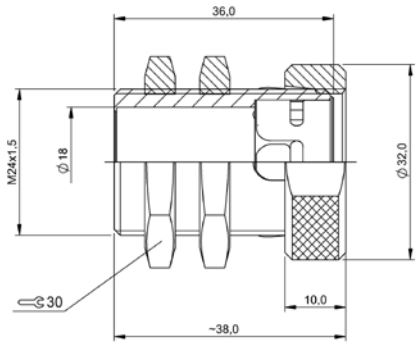

BAM022K

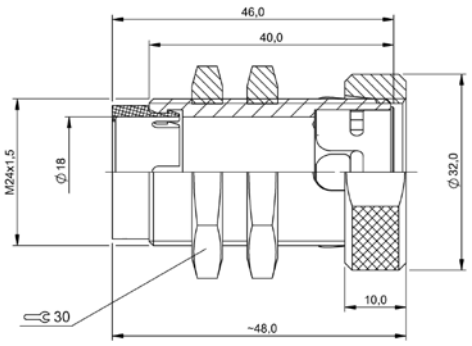

BAM022M

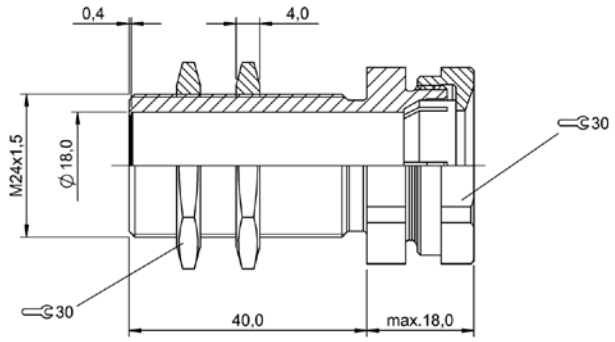

BAM00FN, BAM00FP

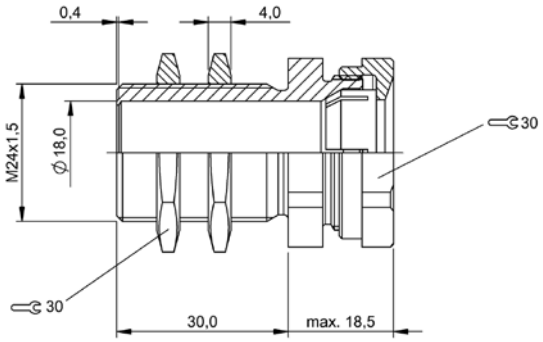

BAM00FR

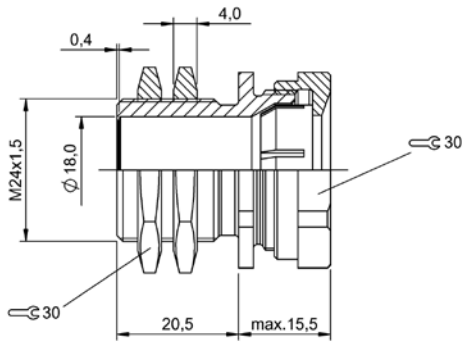

BAM00FT, BAM00FW

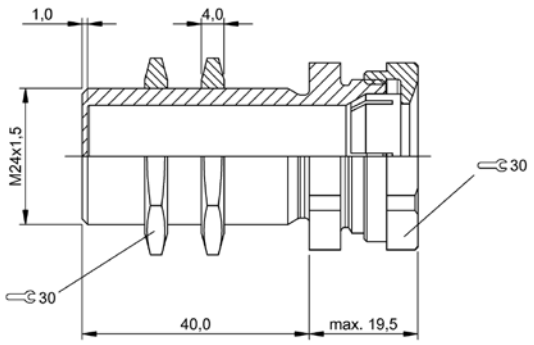

BAM00FY

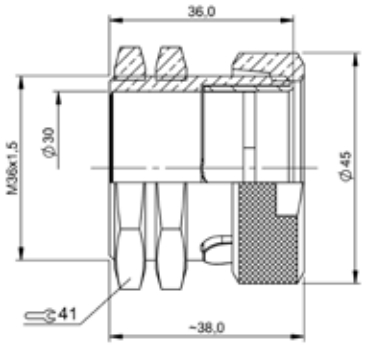

BAM0264

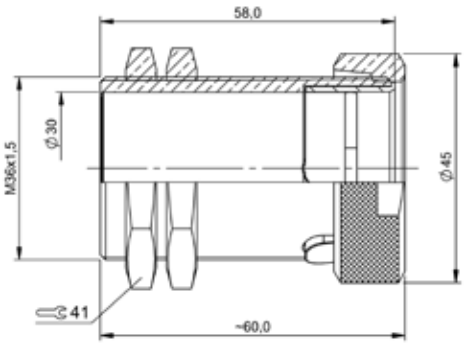

BAM0265, BAM024C

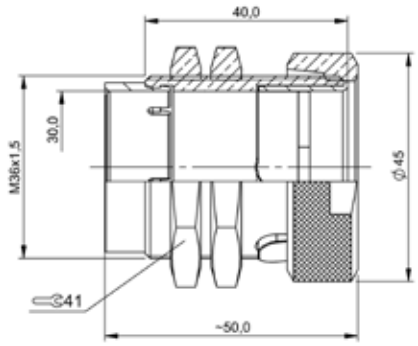

BAM024H

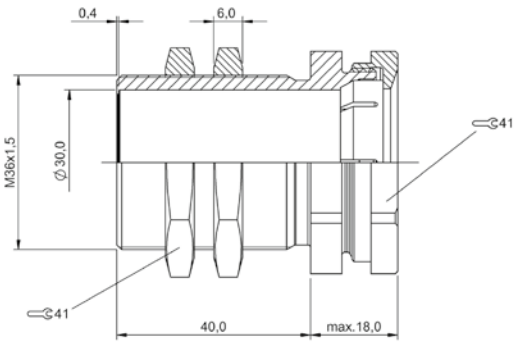

BAM00J4, BAM00J5

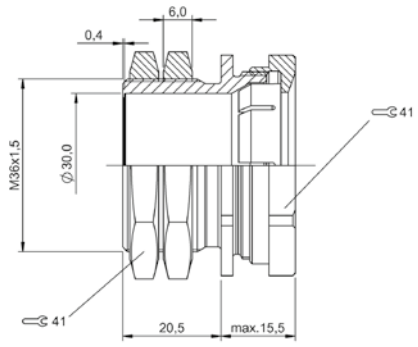

BAM00J6, BAM00J7

	BAM02P1 BAM MC-CS-043-R08-R-01	BAM02P2 BAM MC-CS-043-R08-R-02	BAM037T BAM MC-XA-054-D02,0-4	
Use	for capacitive sensors BCS R08	for capacitive sensors BCS R08	for sensors and fiber optics Ø2	
Material	PP	PP	Brass nickel plated	
Dimension	22 x 10 x 35 mm	75 x 9.4 x 54 mm	8 x 10 mm	
Mounting	Screws, terminals	Screws, terminals	Screws, terminals	
Ambient temperature	-25...85 °C	-25...85 °C	-25...85 °C	
Approval/Conformity	—	—	—	
Productview	Page 466	Page 466	Page 466	

	BAM000W BAM MC-XA-002-D06,5-2	BAM000Y BAM MC-XA-002-D08,0-2	BAM0349 BAM MC-XA-049-D18,0-5	
Use	for sensors Ø6.5 mm	for sensors Ø8 mm	for ultrasonic sensors BUS, for sensors Ø18 mm	
Material	Brass nickel plated	Brass nickel plated	Stainless steel (1.4404) Silicon SI 70/101	
Dimension	8 × 11 mm	10 × 12 mm	Ø 30 x 25.5 mm	
Mounting	Screws, terminals	Screws, terminals	Screws, terminals	
Ambient temperature	-25...85 °C	-25...85 °C	-20...80 °C	
Approval/Conformity	—	—	EHEDG conformal	
Productview	Page 467	Page 467	Page 467	

	BAM000T BAM MC-XA-002-D03,0-2	BAM037U BAM MC-XA-054-D03,0-4	BAM000U BAM MC-XA-002-D04,0-2	BAM037W BAM MC-XA-054-D04,0-4	BAM037Y BAM MC-XA-054-D05,0-4
	for sensors and fiber optics Ø3	for sensors and fiber optics Ø3	for sensors and fiber optics Ø4	for sensors and fiber optics Ø4	for sensors and fiber optics Ø5
	Brass nickel plated	Brass nickel plated	Brass nickel plated	Brass nickel plated	Brass nickel plated
	5 × 7 mm	8 x 10 mm	6 x 7 mm	8 x 10 mm	8 x 10 mm
	Screws, terminals	Screws, terminals	Screws, terminals	Screws, terminals	Screws, terminals
	-25...85 °C	-25...85 °C	-25...85 °C	-25...85 °C	-25...85 °C
	—	—	—	—	—
	Page 466	Page 466	Page 466	Page 466	Page 466

	BAM034A BAM MC-XA-049-D30,0-5				
	for ultrasonic sensors BUS, for sensors Ø30 mm				
	Stainless steel (1.4404) Silicon SI 70/101				
	Ø 50 x 40 mm				
	Screws, terminals				
	-20...80 °C				
	EHEDG conformal				
	Page 467				

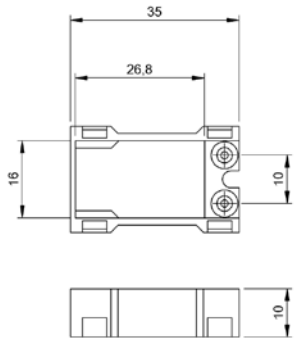

BAM02P1

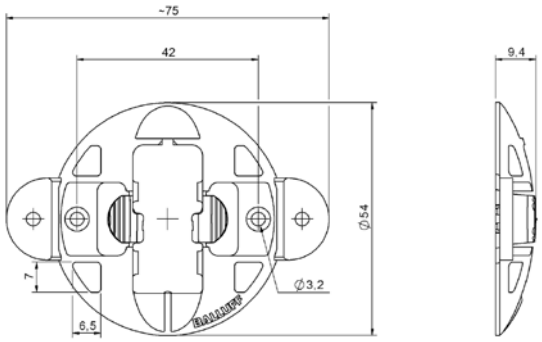

BAM02P2

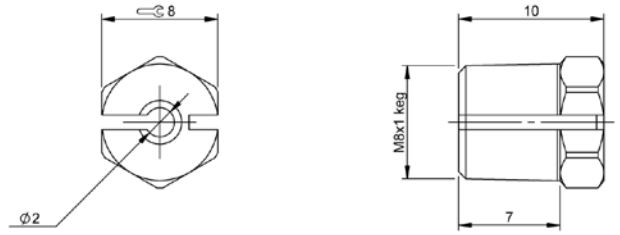

BAM037T

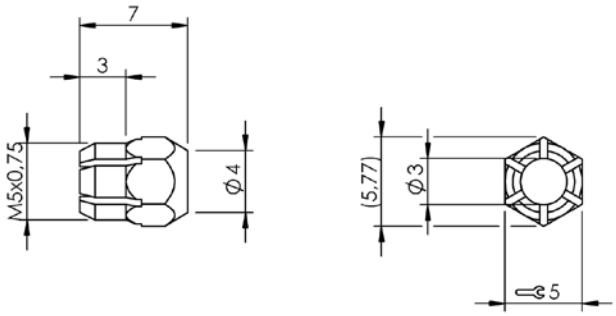

BAM000T

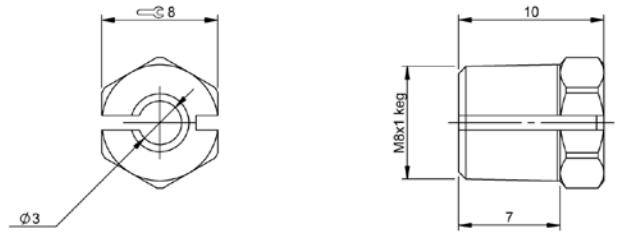

BAM037U

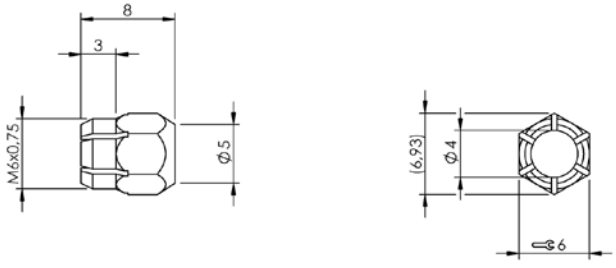

BAM000U

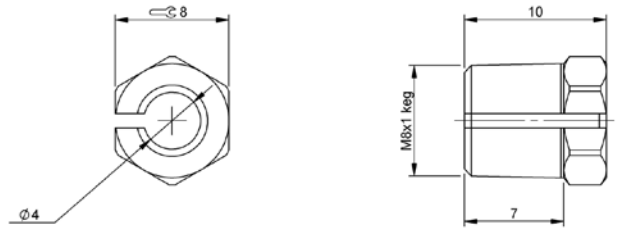

BAM037W

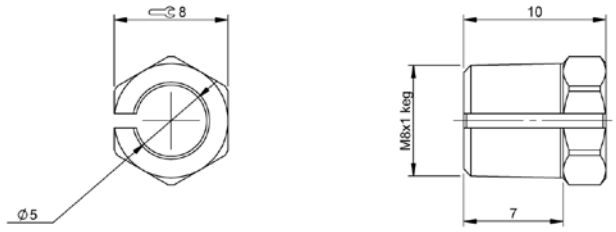

BAM037Y

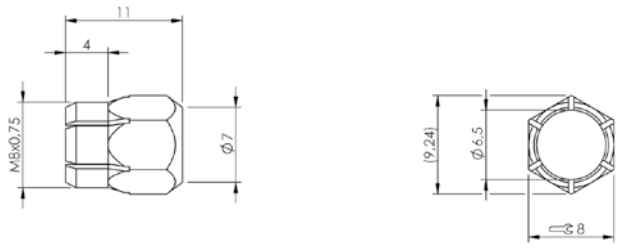

BAM000W

BAM000Y

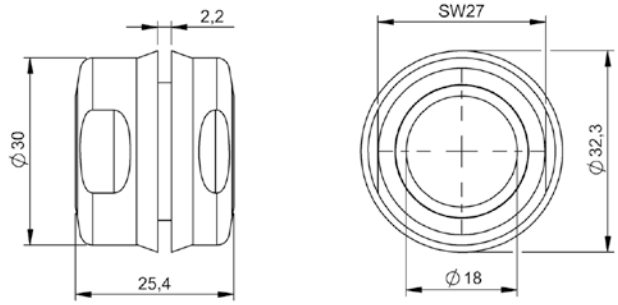

BAM0349

BAM034A

	BAM009A BES 06,5-BS-1	BAM0269 BAM MC-XA-027-D08,0-1	BAM00A2 BES 08,0-BS-1	
Version	Mounting clamp	Mounting clamp	Mounting clamp	
Use	for sensors Ø6.5 mm	for sensors Ø8 mm	for sensors Ø8 mm	
Material	PA 6	Aluminum Anodized	PA 6	
Dimension	27 x 12 x 16 mm	12 x 15 x 27 mm	27 x 12 x 16 mm	
Mounting	Screws, clamps	Screws, clamps	Screws, clamps	
Approval/Conformity	—	—	—	
Productview	Page 478	Page 478	Page 478	

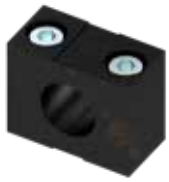

	BAM00F2 BES 18,0-BS-1	BAM00F3 BES 18,0-BS-2	BAM0327 BAM MC-XA-027-D20,0-1	
Version	Mounting clamp	Mounting clamp	Mounting clamp	
Use	for sensors Ø18 mm and M18, for read/write heads Ø18 mm	for sensors Ø18 mm and M18	for machine light Ø20 mm, for line laser Ø20 mm	
Material	PA 6	PBT	Aluminum anodized, natural	
Dimension	36 x 12 x 26 mm	20 x 32 x 40 mm	15 x 30 x 40 mm	
Mounting	Screws, clamps	Screws, clamps	Screws, clamps	
Approval/Conformity	—	—	—	
Productview	Page 479	Page 479	Page 479	

	BAM0218 BAM MC-XA-027-D12,0-1	BAM00C4 BES 12,0-BS-1	BAM00EM BES 14,5-BS-1	BAM00ET BES 16,0-BS-1	BAM0219 BAM MC-XA-027-D18,0-1
	Mounting clamp	Mounting clamp	Mounting clamp	Mounting clamp	Mounting clamp
	for sensors Ø12 mm, for M12 sensors	for sensors Ø12 mm, for read/write heads Ø12 mm	for sensors Ø14.5 mm, for read/write heads Ø14.5 mm, for RFID system BIS C-300	for sensors Ø16 mm, for read/write heads Ø16 mm	for sensors Ø18 mm, for M18 sensors
	Aluminum Anodized	PA 6	PA 6	PA 6	Aluminum Anodized
	12 x 20 x 32 mm	32 x 12 x 20 mm	32 x 12 x 20 mm	36 x 12 x 26 mm	12 x 26 x 36 mm
	Screws, clamps	Screws, clamps	Screws, clamps	Screws, clamps	Screws, clamps
	–	–	–	–	–
	Page 478	Page 478	Page 478	Page 478	Page 478

	BAM0377 BAM MC-XA-053-D20,0-1	BAM00H7 BES 20,0-BS-1	BAM01U0 BAM MC-XA-017-D30,0-1	BAM00HN BES 30,0-BS-1	BAM035Y BAM FS-AM-011-D45,0-4
	Mounting clamp	Mounting clamp	Mounting clamp	Mounting clamp	Holder
	for machine light Ø20 mm, for line laser Ø20 mm	for sensors Ø20 mm	for sensors Ø30 mm, for M30 sensors	for sensors Ø30 mm, for M30 sensors, for read/write heads Ø30 mm	for machine light Ø45 mm, for mounting cuff Ø45mm
	Aluminum anodized, natural	PA 6	Aluminum Anodized	PA 6 GF	Stainless steel
	15 x 29 x 35 mm	45 x 15 x 30 mm	15 x 46 x 64 mm	55 x 18 x 39 mm	1.5 x 40 x 76 mm
	Screws, clamps	Screws, clamps	Screws, clamps	Screws, clamps	Clamps
	–	–	–	Ecolab	–
	Page 479	Page 479	Page 479	Page 479	Page 479

	BAM0379 BAM MC-XA-050-D45,0-1	BAM0360 BAM MC-XE-051-D45,0-3	BAM035Z BAM MC-XE-052-D45,0-1	
Version	Installation set	Mounting clamp	Installation set	
Use	for machine light Ø45 mm	for machine light Ø45 mm	for machine light Ø45 mm	
Material	Aluminum, anodized, natura	Steel, Zinc plated EPDM	Aluminum, anodized, natural	
Dimension	34 x 62.3 x 50 mm	16 x 62.5 x 80 mm	20 x 56 x 50 mm	
Mounting	Screws, clamps	Clamps	Clamps	
Approval/Conformity	—	—	—	
Productview	Page 480	Page 480	Page 480	

	BAM00JW BES Q40-HW-1	BAM00JY BES Q40-HW-2	BAM00JZ BES Q40-HW-3	
Version	Holder	Mounting block	Mounting block	
Use	for inductive sensors BES Q40	for capacitive sensors BCS Q40, for inductive sensors BES Q40, for inductive couplers BIC Q40	For processors BIS C-324, for capacitive sensors BCS Q40, for inductive sensors BES Q40, for inductive couplers BIC Q40	
Material	Aluminum Anodized	Die-cast zinc	Aluminum Anodized	
Dimension	61.5 x 5 x 35 mm	40 x 25 x 40 mm	22 x 40 x 40 mm	
Mounting	Screws	Screws, clamps	Screws, clamps	
Approval/Conformity	—	—	—	
Productview	Page 481	Page 481	Page 481	

	BAM00P0 BF0 08,0-KB-1	BAM02WA BAM MB-XE-031-Q40-A	BAM034N BAM MB-XE-031-Q40-A-01	BAM01TM BAM MC-XA-016-Q40-1	BAM026J BAM MC-XA-032-Q40-1
	Mounting block	Holder	Holder	Holder	Holder
	for sensors Ø8 mm	for inductive couplers BIC Q40, for inductive sensors BES Q40	for capacitive sensors BCS Q40, for inductive sensors BES Q40	for capacitive sensors BCS Q40, for Unicompact sensors, for inductive sensors BES Q40, for inductive couplers BIC Q40	for capacitive sensors BCS Q40, for inductive sensors BES Q40, for inductive couplers BIC Q40
	Aluminum	PA 6	PA 6	Aluminum Anodized Plastic	Aluminum Anodized
	16 x 20 x 12 mm	40 x 30 x 62.7 mm	40 x 30 x 65 mm	100 x 5 x 40 mm	50 x 5 x 80 mm
	Screw M3	Screws	Screws	Screws	Screws
	—	—	—	—	—
	Page 480	Page 480	Page 480	Page 480	Page 480

	BAM00K3 BES R04-MF-01	BAM02Y5 BAM MB-XA-029-D30,0-5	BAM0158 BES 516-MB-08	BAM0159 BES 516-MB-12	BAM015A BES 516-MB-18
	Holder	Mounting bracket	Mounting bracket	Mounting bracket	Mounting bracket
	for inductive sensors BES R04	for sensors Ø30 mm, for temperature sensor BTS M30	For M08 sensors	For M12 sensors	For M18 sensors
	Stainless steel	Stainless steel (1.4404)	Stainless steel	Stainless steel	Stainless steel
	4 x 16.2 x 9 mm	50 x 63 x 108 mm	29 x 34 x 76 mm	29 x 34 x 76 mm	29 x 34 x 76 mm
	Screws	Clamps	Screws	Screws	Screws
	—	—	CE, EAC, WEEE	CE, EAC, WEEE	CE, EAC, WEEE
	Page 481	Page 481	Page 481	Page 481	Page 481

	BAM015C BES 516-MB-30	BAM0092 BES 03,0-KB-3	BAM0094 BES 04,0-KB-1	
Version	Mounting bracket	Mounting block	Mounting block	
Use	For M30 sensors	for sensors and fiber optics Ø3	for sensors and fiber optics Ø4	
Material	Stainless steel	PA 6	PA 6	
Dimension	48 x 55 x 108 mm	16 x 12 x 20 mm	17 x 12 x 9 mm	
Mounting	Screws	Screws, clamps	Screws, clamps	
Approval/Conformity	CE, EAC, WEEE	—	—	
Productview	Page 482	Page 482	Page 482	

	BAM009F BES 06,5-KB-7	BAM00A4 BES 08,0-KB-10/W	BAM00A5 BES 08,0-KB-3	
Version	Mounting block	Mounting block	Mounting block	
Use	for sensors Ø6.5 mm	for sensors Ø8 mm, for M08 sensors	for sensors Ø8 mm, for M08 sensors	
Material	Aluminum Anodized	Steel galvanized	PA 6	
Dimension	16 x 12 x 20 mm	35 x 12.7 x 28.6 mm	16 x 12 x 20 mm	
Mounting	Screws, clamps	Screws, clamps	Screws, clamps	
Approval/Conformity	—	—	—	
Productview	Page 483	Page 483	Page 483	

	BAM0095 BES 04,0-KB-3	BAM0097 BES 05,0-KB-1	BAM0098 BES 05,0-KB-3	BAM009C BES 06,5-KB-1	BAM009E BES 06,5-KB-3
	Mounting block	Mounting block	Mounting block	Mounting block	Mounting block
	for sensors and fiber optics Ø4	for sensors Ø5 mm, for M05 sensors	for sensors Ø5 mm, for M05 sensors	for sensors Ø6.5 mm	for sensors Ø6.5 mm
	PA 6	PA 6	PA 6	PA 6	PA 6
	16 x 12 x 20 mm	17 x 12 x 9 mm	16 x 12 x 20 mm	17 x 12 x 9 mm	16 x 12 x 20 mm
	Screws, clamps	Screws, clamps	Screws, clamps	Screws, clamps	Screws, clamps
	–	–	–	–	–
	Page 482	Page 482	Page 482	Page 482	Page 482

	BAM00A6 BES 08,0-KB-3-F	BAM00AA BES 08,0-KB-7	BAM00AW BES 08,1-KB-4-F	BAM00C6 BES 12,0-KB-10/W	BAM00C7 BES 12,0-KB-2
	Mounting clamp with positive stop	Mounting block	Mounting clamp with positive stop	Mounting block	Mounting block
	for sensors Ø8 mm, for M08 sensors	for sensors Ø8 mm, for M08 sensors	for sensors Ø8 mm, for M08 sensors	for sensors Ø12 mm, for M12 sensors	for sensors Ø12 mm, for M12 sensors
	PA 6	Aluminum Anodized	Aluminum	Steel galvanized	PA 6
	16 x 12 x 20 mm	16 x 12 x 20 mm	28 x 30 x 12 mm	38.1 x 19 x 34.9 mm	40 x 16 x 40 mm
	Screws, clamps	Screws, clamps	Screws, clamps	Screws, clamps	Screws, clamps
	–	–	–	–	–
	Page 483	Page 483	Page 483	Page 483	Page 483

	BAM00C9 BES 12,0-KB-3	BAM00CA BES 12,0-KB-3-F	BAM00CF BES 12,0-KB-4-F	
Version	Mounting block	Mounting clamp with positive stop	Mounting clamp with positive stop	
Use	for sensors Ø12 mm, for M12 sensors	for sensors Ø12 mm, for M12 sensors	for sensors Ø12 mm, for M12 sensors	
Material	PA 6	PA 6	Aluminum Anodized	
Dimension	40 x 18 x 30 mm	40 x 18 x 30 mm	35 x 16 x 28 mm	
Mounting	Screws, clamps	Screws, clamps	Screws, clamps	
Approval/Conformity	—	—	—	
Productview	Page 484	Page 484	Page 484	

	BAM00FC BES 18,0-KB-4-F	BAM00FE BES 18,0-KB-5-F	BAM00T3 BOS 18,0-KB-1	
Version	Mounting clamp with positive stop	Mounting clamp with positive stop	Mounting clamp with ball joint	
Use	for sensors Ø18 mm, for M18 sensors	for sensors Ø18 mm, for M18 sensors	For M18 sensors	
Material	Aluminum Anodized	PC	PA GF	
Dimension	40 x 22 x 28 mm	30 x 24 x 29 mm	32.5 x 66 x 57.2 mm	
Mounting	Screws, clamps	Clamps	Screws, clamps	
Approval/Conformity	—	—	—	
Productview	Page 485	Page 485	Page 485	

BAM00EK BES 12.0-KB-9S
Mounting block
for sensors Ø12 mm, for M12 sensors
Aluminum
31.8 x 18 x 38.1 mm
Screws, clamps
–
Page 484

BAM01KM BOS 12,0-KB-1
Mounting clamp with ball joint
For M12 sensors
PA
32.5 x 66 x 57.2 mm
Screws, clamps
–
Page 484

BAM00F5 BES 18,0-KB-10/W
Mounting block
for sensors Ø18 mm, for M12 sensors
Steel galvanized
38.1 x 25.4 x 38.1 mm
Screws, clamps
–
Page 484

BAM00F7 BES 18,0-KB-3
Mounting block
for sensors Ø18 mm, for M18 sensors
PA 6
40 x 24 x 30 mm
Screws, clamps
–
Page 484

BAM00F8 BES 18,0-KB-3-F
Mounting clamp with positive stop
for sensors Ø18 mm, for M18 sensors
PA 6
40 x 24 x 30 mm
Screws, clamps
–
Page 484

BAM00HR BES 30,0-KB-10/W
Mounting block
for sensors Ø30 mm, for M30 sensors
Steel galvanized
44.5 x 38.1 x 60 mm
Screws, clamps
–
Page 485

BAM00HU BES 30,0-KB-3-F
Mounting clamp with positive stop
for sensors Ø30 mm, for M30 sensors
PA 6
54 x 36 x 30 mm
Screws, clamps
–
Page 485

BAM00HW BES 30,0-KB-4-F
Mounting clamp with positive stop
for sensors Ø30 mm, for M30 sensors
Aluminum Anodized
56 x 34 x 34 mm
Screws, clamps
–
Page 485

BAM00HY BES 30,0-KB-5-F
Mounting clamp with positive stop
for sensors Ø30 mm, for M30 sensors
PC
35 x 35 x 41 mm
Clamps
–
Page 485

BAM00TN BOS 30,0-KB-1
Mounting clamp with ball joint
For M30 sensors
PA GF
32.5 x 66 x 57.2 mm
Screws, clamps
–
Page 485

	BAM02UE BAM MC-XA-014-Q08-2	BAM00NJ BES Q08-KH-2	BAM01AU BES Q08-KH-3	
Version	Holder	Holder	Holder	
Use	for photoelectric sensors BOS Q08M	for photoelectric sensors BOS Q08M	for photoelectric sensors BOS Q08M	
Material	Brass White bronze	Copper Zinc plated	Copper Zinc plated	
Dimension	13.5 x 14 x 65 mm	17.6 x 12.1 x 61.5 mm	17.6 x 12.1 x 60 mm	
Mounting	Minitec Profile	Item Profile 8mm slot	Bosch profile 10 mm slit	
Approval/Conformity	—	—	—	
Productview	Page 486	Page 486	Page 486	

	BAM009U BES 08-HW-1	BAM00C0 BES 12-HW-1	BAM00EY BES 18-HW-1	BAM00HH BES 30-HW-1	
	Mounting bracket	Mounting bracket	Mounting bracket	Mounting bracket	
	For M08 sensors, for positive stop M8	For M12 sensors, for positive stop M12	For M18 sensors, for positive stop M18	For M30 sensors, for positive stop M30	
	Aluminum	Aluminum	Aluminum	Aluminum	
	25 x 30 x 30 mm	25 x 30 x 30 mm	30 x 40 x 40 mm	40 x 40 x 60 mm	
	Screws	Screws	Screws	Screws	
	—	—	—	—	
	Page 486	Page 486	Page 486	Page 486	

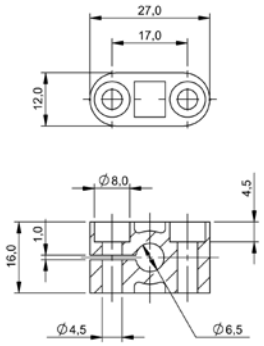

BAM009A

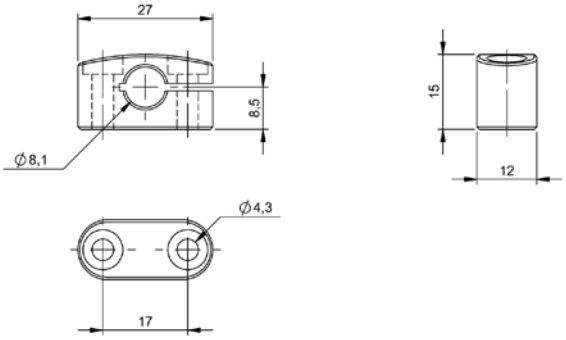

BAM0269

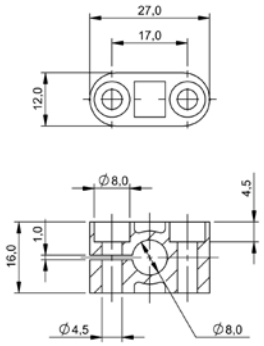

BAM00A2

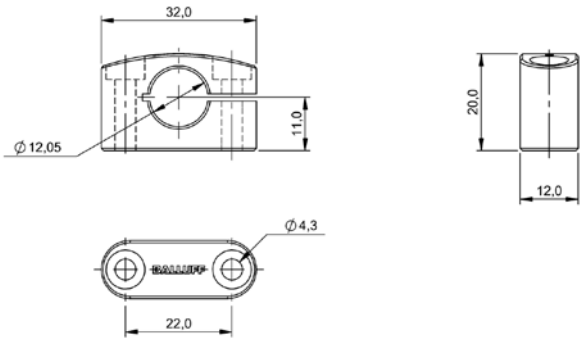

BAM0218

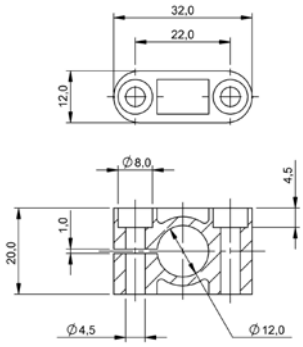

BAM00C4

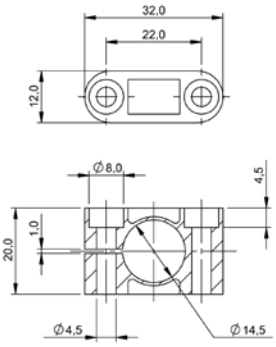

BAM00EM

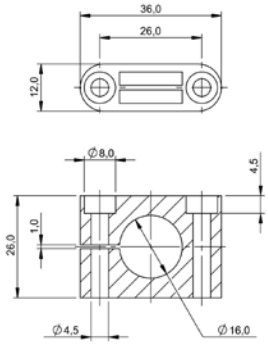

BAM00ET

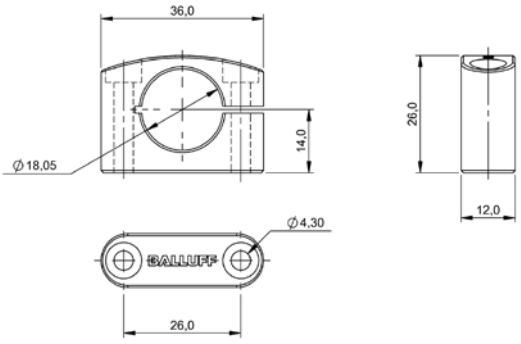

BAM0219

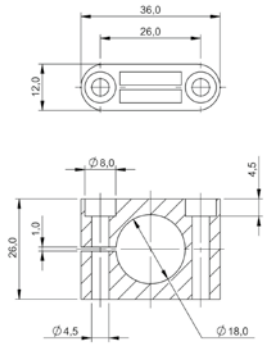

BAM00F2

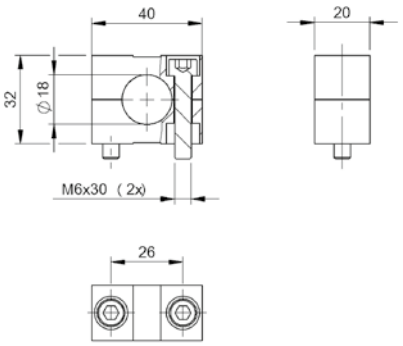

BAM00F3

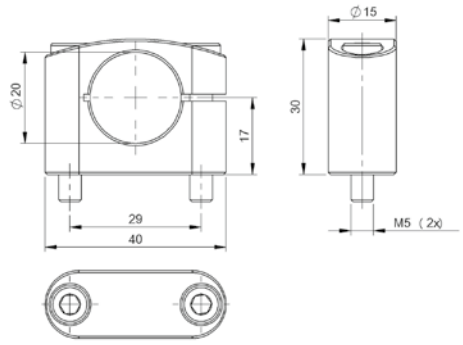

BAM0327

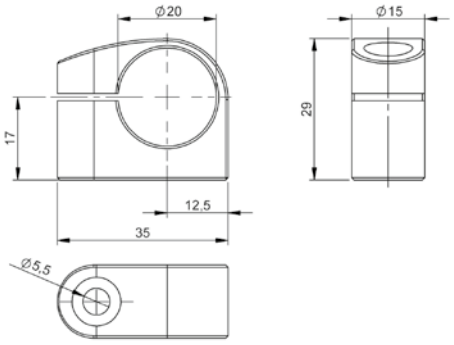

BAM0377

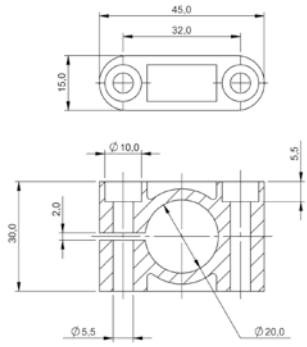

BAM00H7

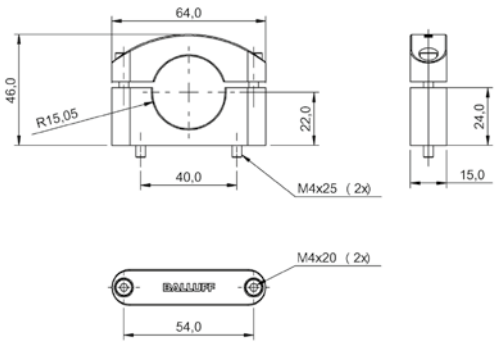

BAM01U0

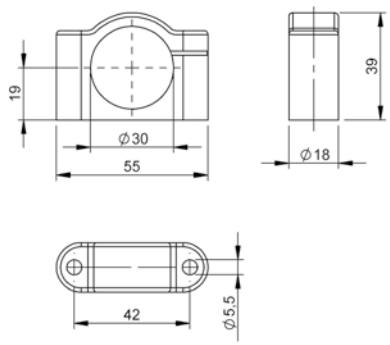

BAM00HN

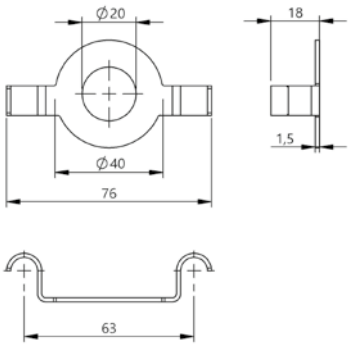

BAM035Y

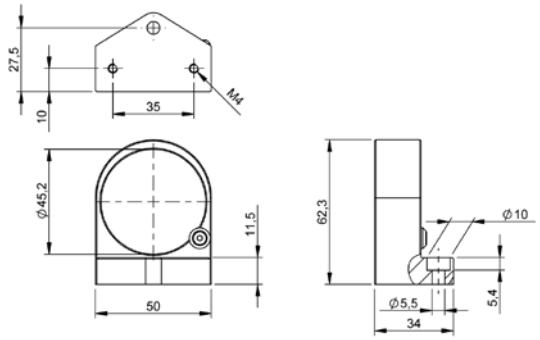

BAM0379

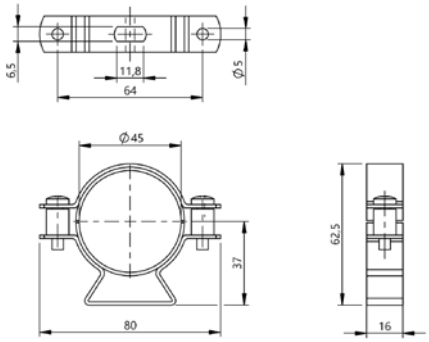

BAM0360

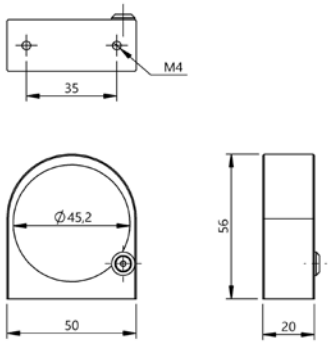

BAM035Z

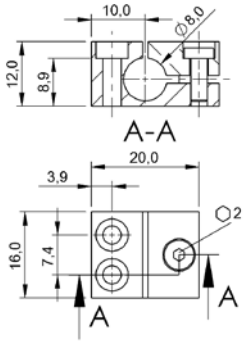

BAM00P0

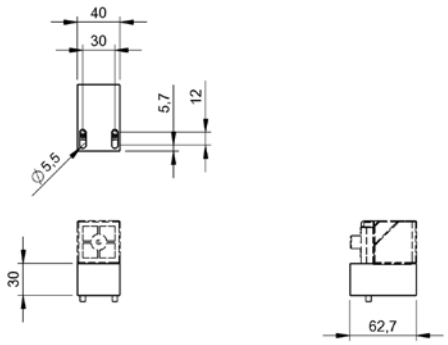

BAM02WA

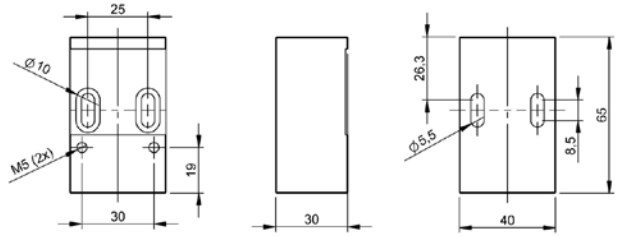

BAM034N

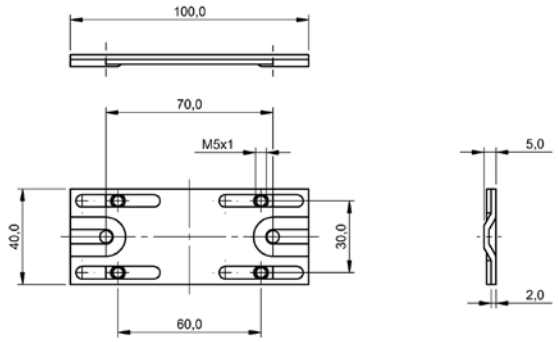

BAM01TM

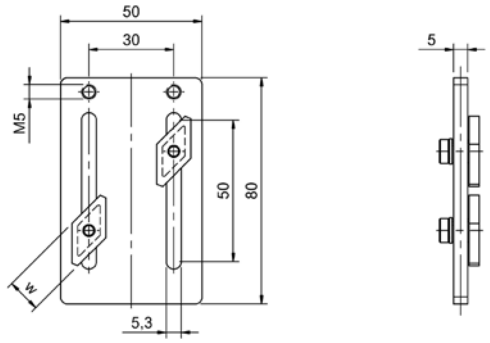

BAM026J

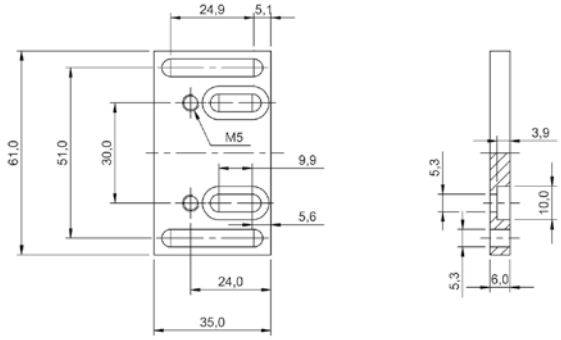

BAM00JW

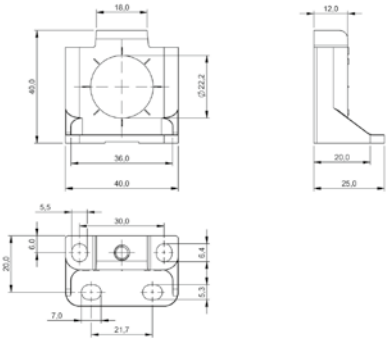

BAM00JY

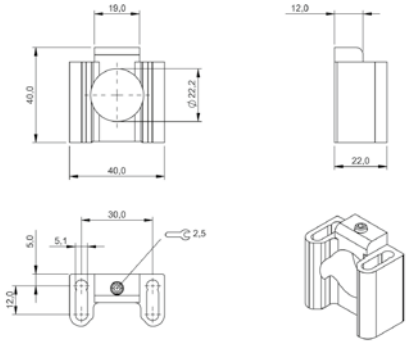

BAM00JZ

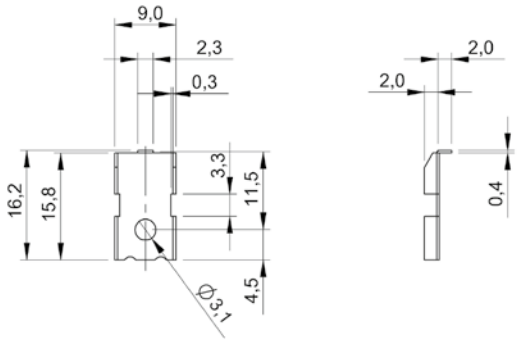

BAM00K3

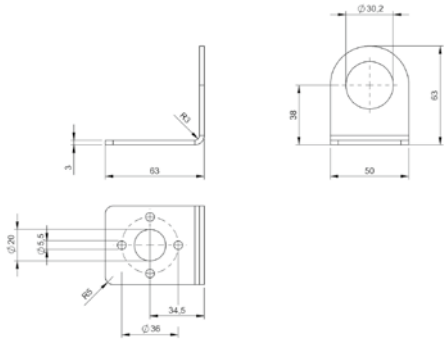

BAM02Y5

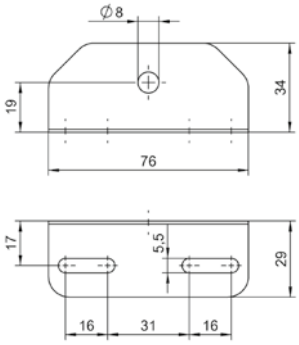

BAM0158

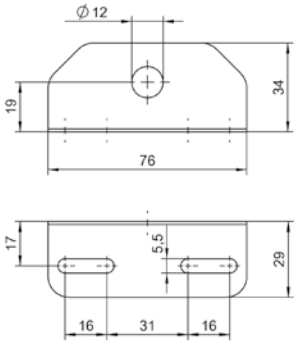

BAM0159

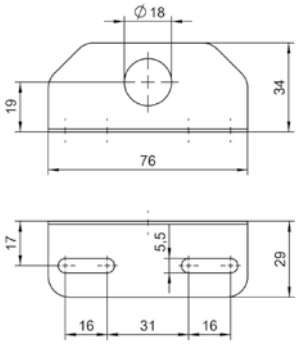

BAM015A

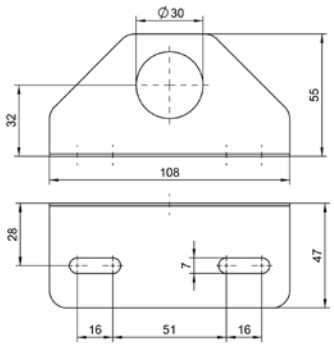

BAM015C

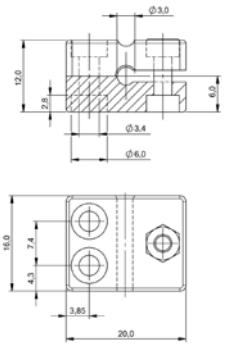

BAM0092

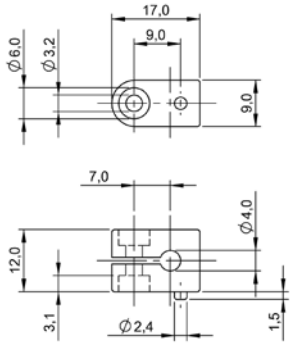

BAM0094

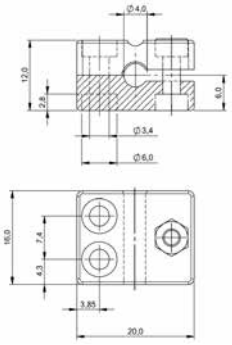

BAM0095

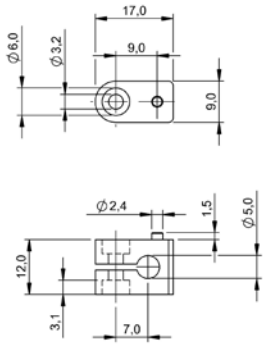

BAM0097

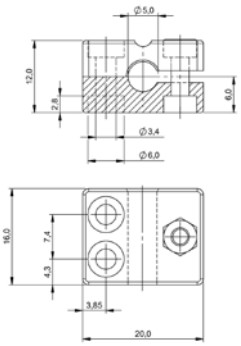

BAM0098

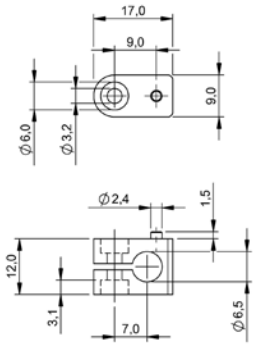

BAM009C

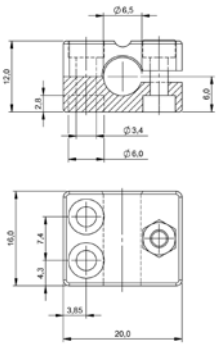

BAM009E

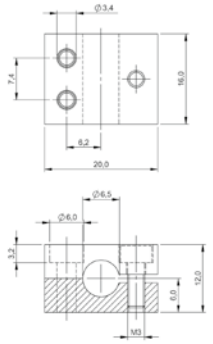

BAM009F

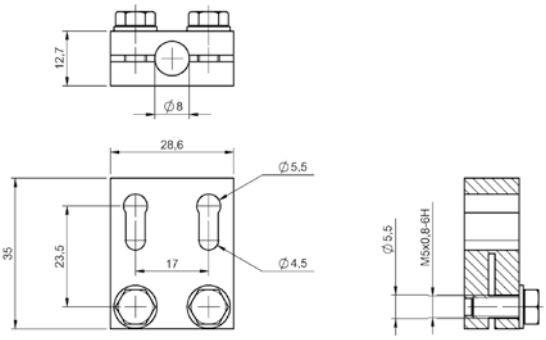

BAM00A4

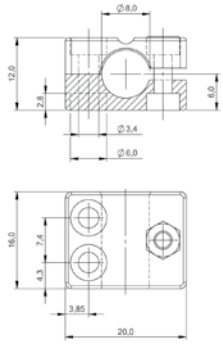

BAM00A5

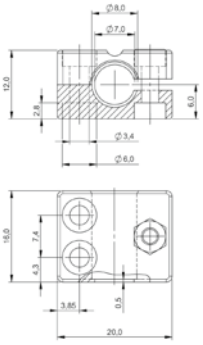

BAM00A6

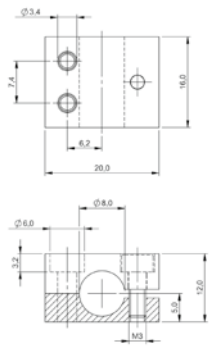

BAM00AA

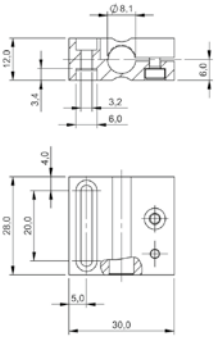

BAM00AW

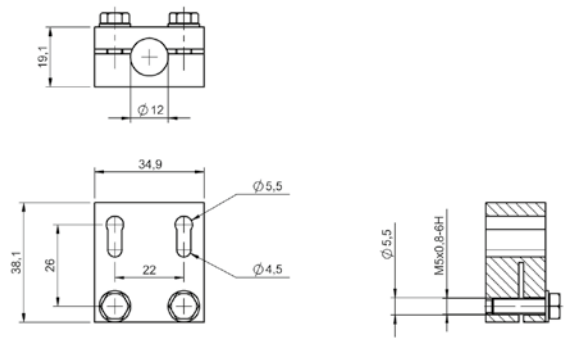

BAM00C6

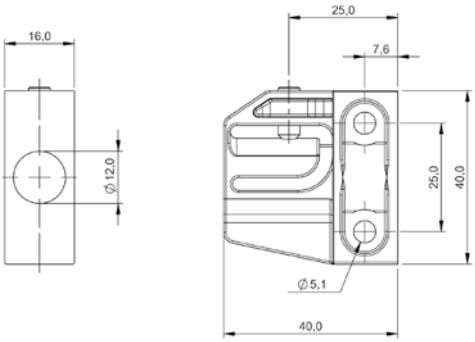

BAM00C7

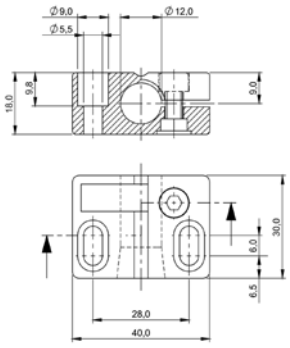

BAM00C9

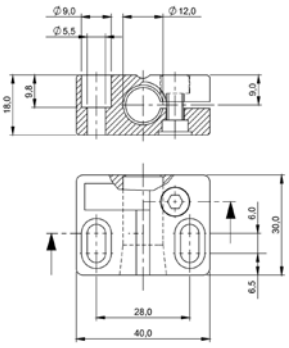

BAM00CA

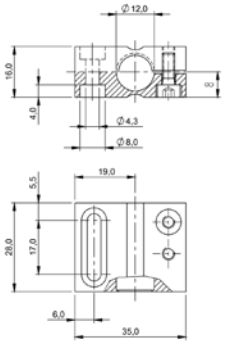

BAM00CF

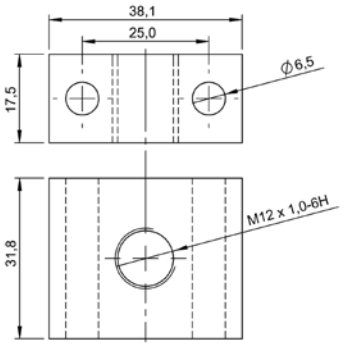

BAM00EK

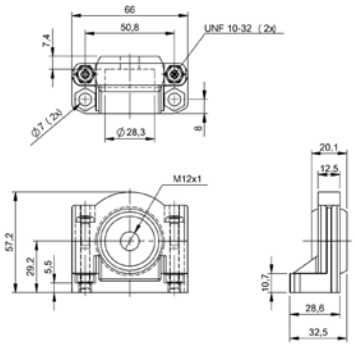

BAM01KM

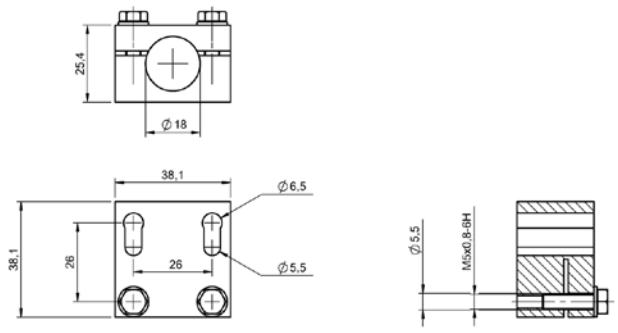

BAM00F5

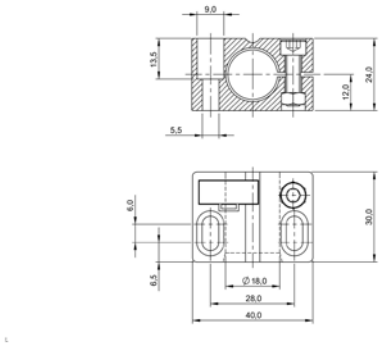

BAM00F7

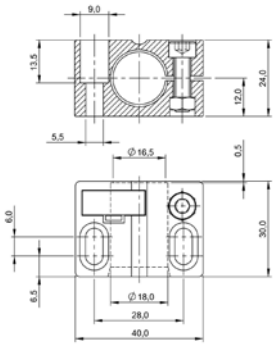

BAM00F8

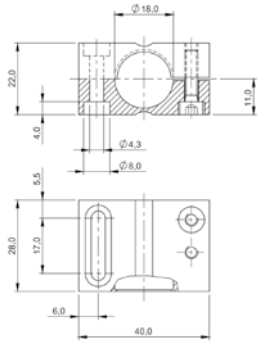

BAM00FC

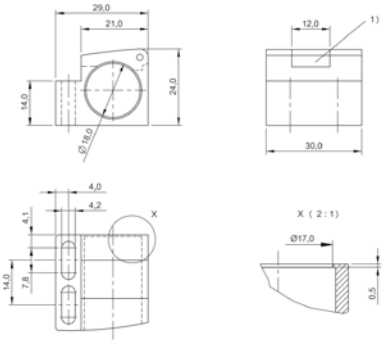

1) Mechanical closing system

BAM00FE

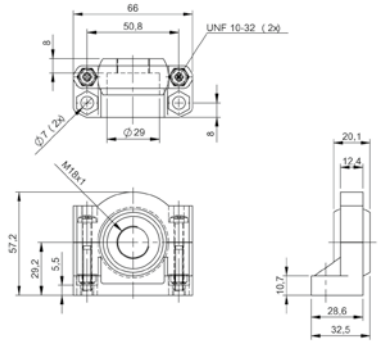

BAM00T3

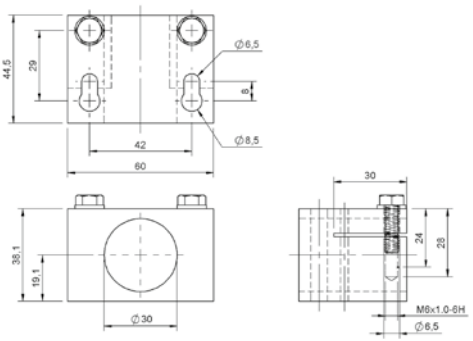

BAM00HR

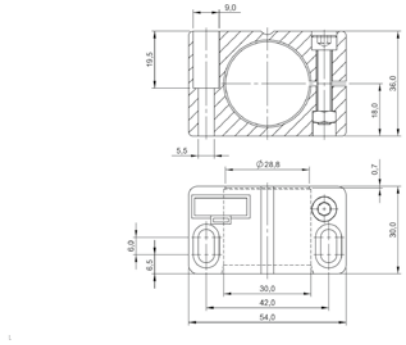

BAM00HU

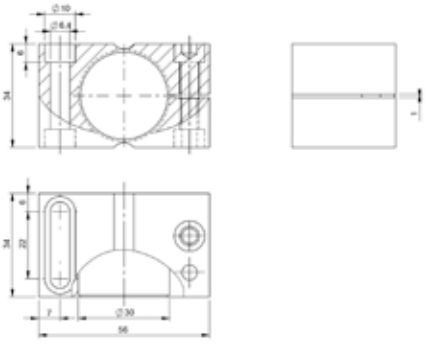

BAM00HW

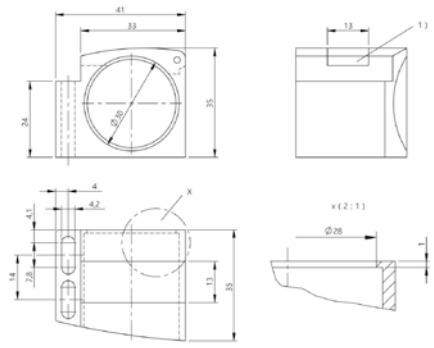

1) Mechanical closing system

BAM00HY

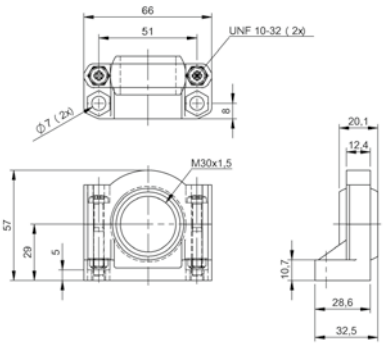

BAM00TN

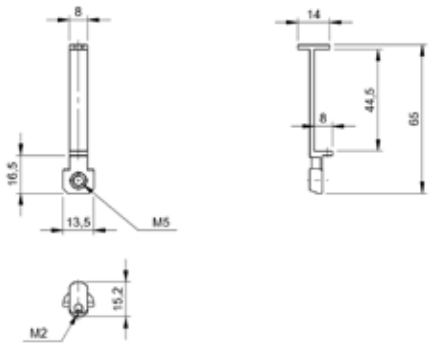

BAM02UE

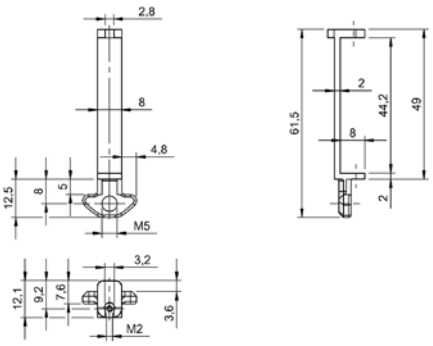

BAM00NJ

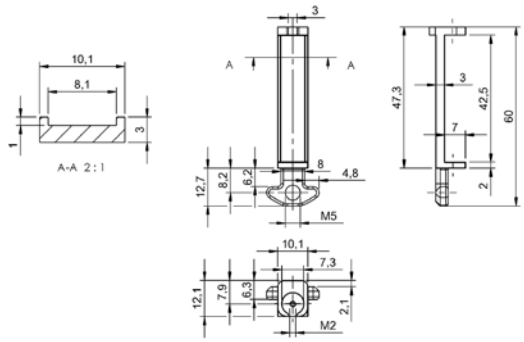

BAM01AU

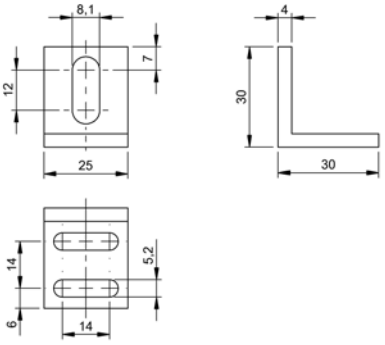

BAM009U

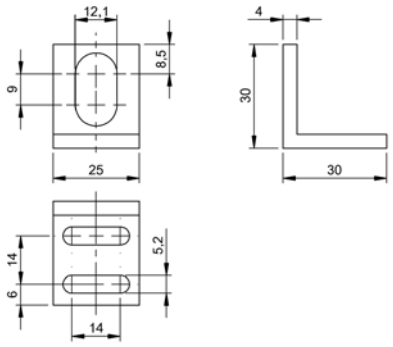

BAM00C0

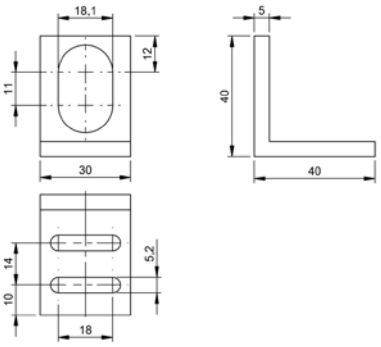

BAM00EY

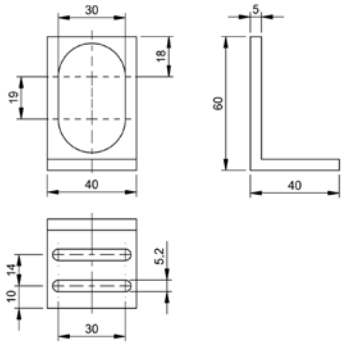

BAM00HH

	BAM0255 BAM MB-NI-016-800-1	BAM026K BAM MB-NI-017-100-1	
Principle of operation	holding SmartLight	holding SmartLight	
Use	for signal light Smartlight	for signal light Smartlight	
Material	Naturally anodized aluminum	Naturally anodized aluminum	
Dimension	80 x 6 x 62 mm	Ø 70 x 100 mm	
Mounting	Screws	Screws	
Productview	Page 490	Page 491	

	BAM034C BAM MB-NI-017-250-1	BAM026L BAM MB-NI-017-400-1	BAM02M5 BAM MB-XA-025-D19,0-1	
	holding SmartLight	holding SmartLight	holding SmartLight	
	for signal light Smartlight	for signal light Smartlight	for signal light Smartlight	
	Naturally anodized aluminum	Naturally anodized aluminum	Naturally anodized aluminum	
	Ø 70 x 250 mm	Ø 70 x 400 mm	121 x 72 x 80 mm	
	Screws	Screws	Screws	
	Page 491	Page 491	Page 490	

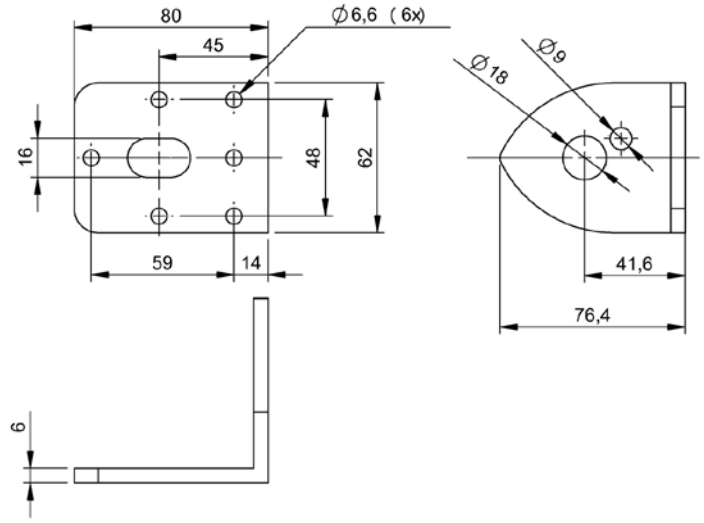

BAM0255

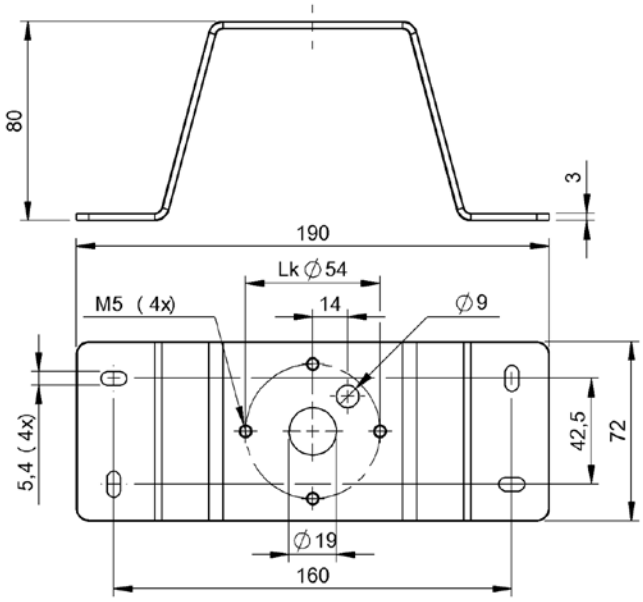

BAM02M5

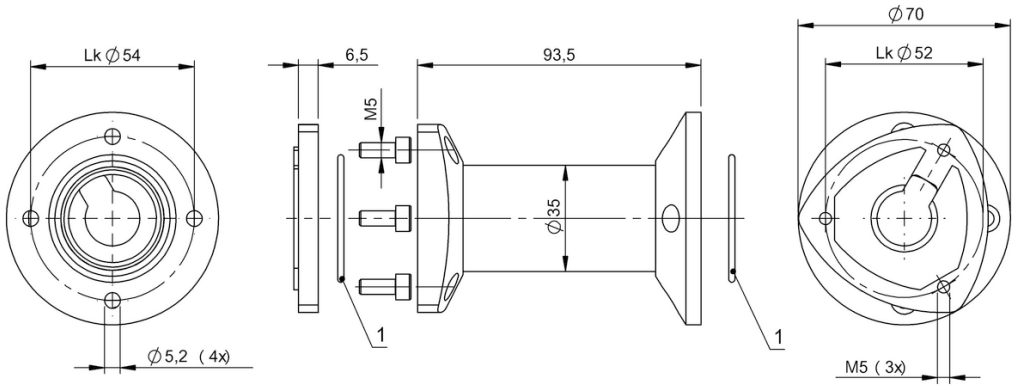

1) O-ring

BAM026K

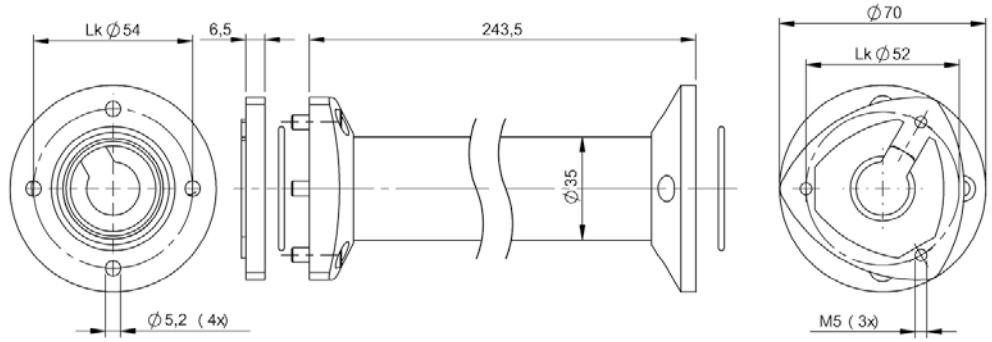

BAM034C

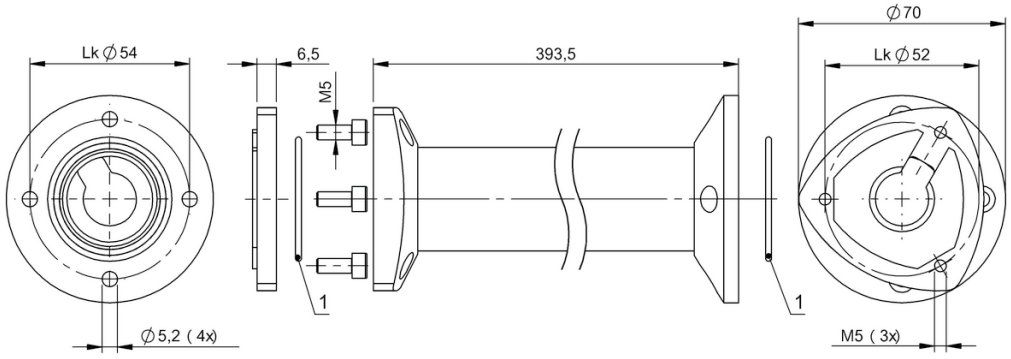

1) O-ring

BAM026L

	BAM02J9 BAM MD-VS-002-0002	BAM02JA BAM MD-VS-002-0003	BAM02JC BAM MD-VS-002-0004	
Version	Holder	Stand	Positioning	
Application	for table or wall mount	Tripod holder with continous read function	Height adjustable positioning	
Use	for BVS HS-P	for BVS HS-P	for BVS HS-P	
Material	ABS	ABS powder coated Steel	ABS Steel	
Dimension	84 x 126 mm	98 x 318 x 150 mm	168 x 102 mm	
Mounting	Screws, Glue	Screws, Glue	hanging	
Productview	Page 494	Page 494	Page 494	

	BAM01YP BMS CS-M-S25-DX15-00	BAM02ZU BMS CU-M-S25-D030-01	BAM01YT BMS CUJ-M-S25-D045-00	
Version	Quick-change plate	Holder, quick-change plate	3D holder system	
Application	Adapter	for mounting profiles, for quick-change plate	for mounting profiles, with orientation in rotational position and angle orientation, for quick-change plate	
Use	for BVS …-E, for Smart-Camera BVS SC, for connection plate VESA 75/100, for 3D holding system, for holding of the quick-change plate	for BVS …-E, for Smart-Camera BVS SC	for BVS …-E, for Smart-Camera BVS SC	
Material	Naturally anodized aluminum	Naturally anodized aluminum	Naturally anodized aluminum	
Dimension	55 x 7.5 x 60 mm	15.1 x 60 x 60 mm	60 x 84 x 60 mm	
Mounting	Screws, terminals	Screws	Screws, terminals	
Productview	Page 495	Page 495	Page 495	

BAM02Y8 BAM MD-VS-002-0005
Stand
Tripod holder with continous read function
for BVS HS-Q
ABS Steel
100 × 160 mm
Screws, Glue
Page 494

BAM02Y9 BAM MD-VS-002-0006
Holder for table/wall mount
—
for BVS HS-Q
ABS
75 × 115 mm
Screws, Adhesive
Page 494

BAM02ZW BAM MB-MS-038-B19-1
Mounting brackets
—
for BVS …-E, for SmartCamera BVS SC
Naturally anodized aluminum
3 x 60 x 80 mm
Screws, terminals
Page 494

BAM01AC BAM MB-XA-003-B03-1
Holder
—
for BVS …-E
Naturally anodized aluminum
106 x 50 x 75 mm
Screws, Clamps
Page 494

BAM01TK BMS CS-M-D12-IX13-01
Holder
for protective housing BVS
for BVS …-E
Stainless steel (1.4301)
172 x 34 x 65 mm
Screws, terminals
Page 494

BAM00WN BVS Z-MB-01
Mounting brackets
for wall mount, for mounting system BMS
for BVS …-E
Stainless steel
74 x 47 x 51 mm
Screws, Clamps
Page 495

BAM02P7 BAM MB-VS-026-B14-1
Mounting brackets
for ring light BAE
for BVS SC-..
Naturally anodized aluminum
110 x 3 x 64 mm
Screws
Page 495

BAM01AE BAM MB-XA-002-B02-1
Mounting brackets
for mounting system BMS
for line light BAE
Naturally anodized aluminum
61 x 40 x 43 mm
Screws, terminals
Page 495

BAM02ML BAM MC-XA-042-D20,0-1
Holder
for wall mount, for mounting profiles
for machine light Ø20 mm
Naturally anodized aluminum
15 x 29 x 35 mm
Screws, terminals
Page 459

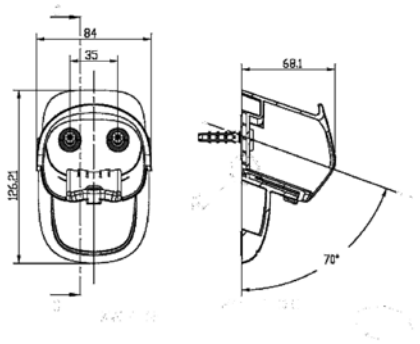

BAM02J9

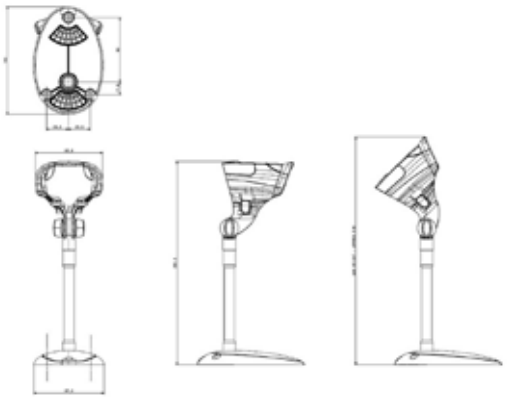

BAM02JA

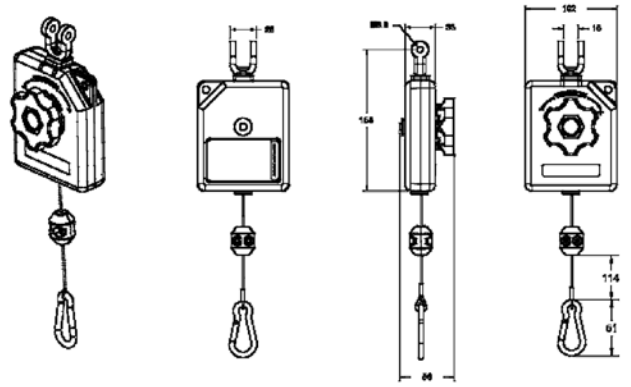

BAM02JC

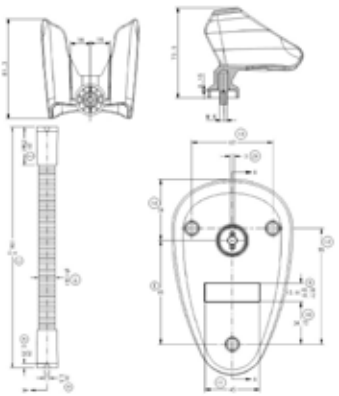

BAM02Y8

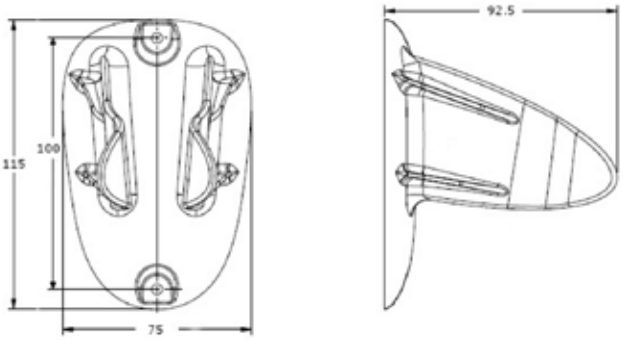

BAM02Y9

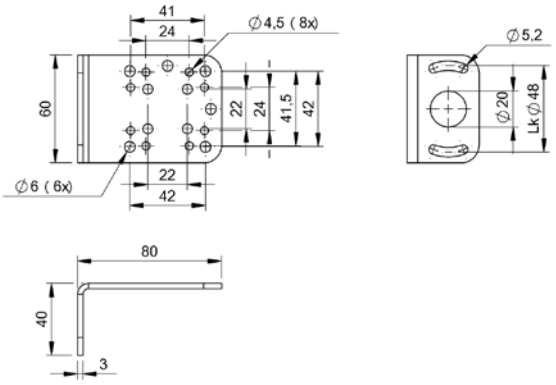

BAM02ZW

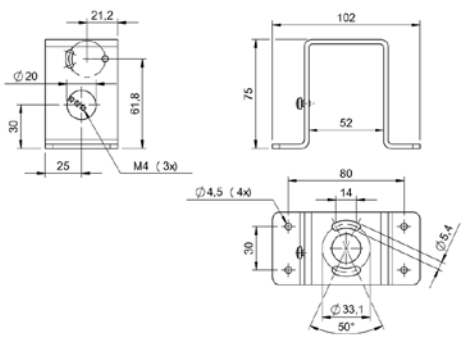

BAM01AC

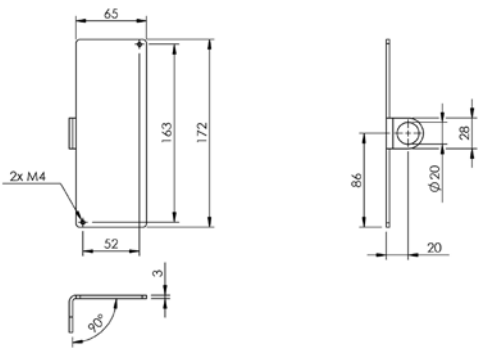

BAM01TK

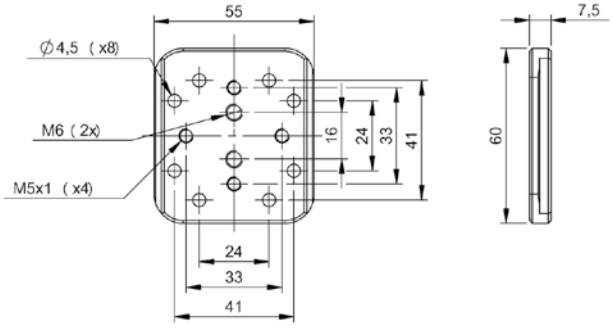

BAM01YP

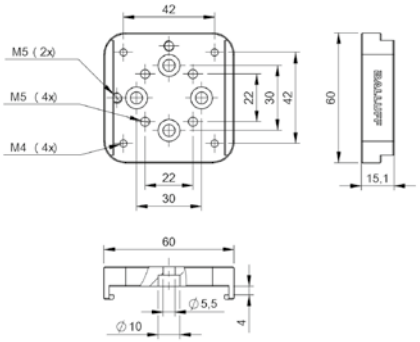

BAM02ZU

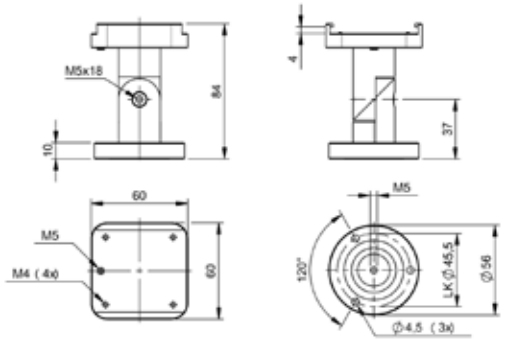

BAM01YT

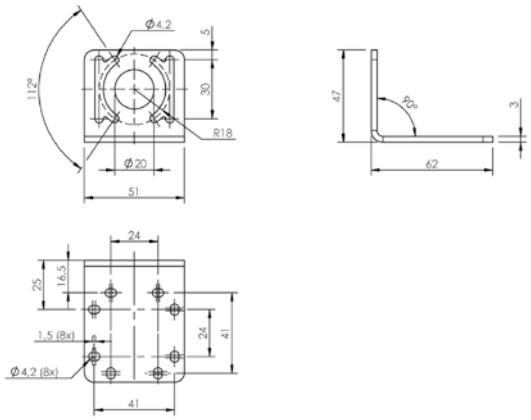

BAM00WN

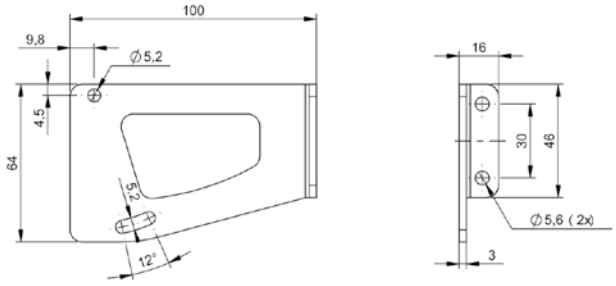

BAM02P7

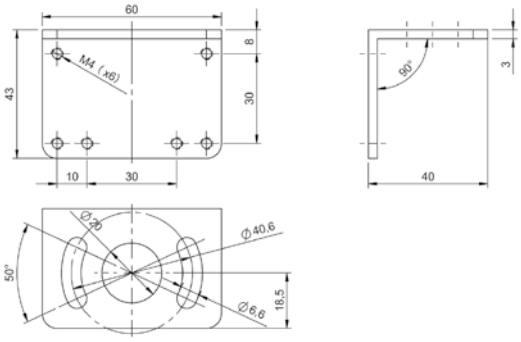

BAM01AE

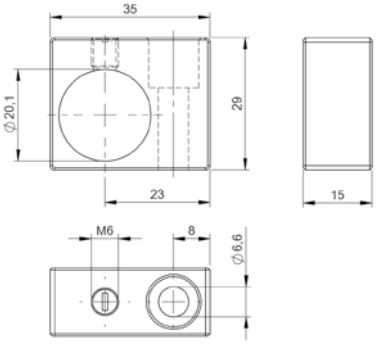

BAM02ML

	BAM0127 BIS C-122-AD-1	BAM0128 BIS C-122-AD-2	BAM01LW BIS Z-SP-003	
Principle of operation	Adapter BIS	Adapter BIS	Spacer ring, piece	
Use	Mounting adapter for data carriers BIS C-122	Mounting adapter for data carriers BIS C-122	Mounting set and spacer for data carriers BIS U-100	
Material	PA 6	PA 6	PA GF	
Dimension	Ø 11.6 x 8 mm	Ø 11.6 x 6 mm	Ø 10 x 10 mm	
Mounting	Screws	—	Screws	
Ambient temperature	—	—	-40...70 °C	
Ambient temperature	—	—	-40...70 °C	
Productview	Page 500	Page 500	Page 500	

	BAM012H BIS L-203-ZH1	BAM012L BIS Z-HW-001	BAM01FT BIS Z-HW-002	
Principle of operation	Holding RFID system	Holding RFID system	Holding RFID system	
Use	Holder for data carriers BIS L-103/203	for processor units C/L/M-600x	Holder for mounting data carriers BIS M-107	
Material	POM	Aluminum (mounting bracket) PA 6 (rail holder)	PPS GF40	
Dimension	Ø 16 x 18 mm	100 × 50 mm	Ø 30 x 13.7 mm	
Mounting	Clamps	Mounting rail, DIN rail	Screws	
Ambient temperature	-25...85 °C	0...70 °C	0...70 °C	
Ambient temperature	-25...85 °C	0...70 °C	0...70 °C	
Productview	Page 501	Page 501	Page 501	

BAM020R BIS Z-SP-004
Spacer ring, piece
Mounting set and spacer for high-temperature data carriers
Ceramic
Ø 25.4 x 25.4 mm
Screws
-40...240 °C
-40...240 °C
Page 500

BAM01MY BAM MB-XA-010-B07-4
Holding RFID system
Mounting bracket for read/write heads for Bosch TS1 and TS2
Stainless steel (1.4301)
105 x 14 x 32 mm
Screw M4
—
—
Page 500

BAM02PN BAM MB-XA-027-B15-4
Holding RFID system
Mounting bracket for BIS M-400x
Stainless steel (1.4401)
86 x 2.5 x 35 mm
Screws, terminals
—
—
Page 500

BAM01Y3 BAM MC-XA-018-B04-4
Holding RFID system
Mounting bracket for read/write heads BIS VM-3xx
Stainless steel (1.4310)
78.2 x 11.8 x 34.8 mm
Screws
—
—
Page 500

BAM012E BIS C-108-MF-01
Holding RFID system
Mounting plate for BIS C-108
Aluminum
100 × 5 mm
Screws
-30...70 °C
-30...70 °C
Page 500

BAM01JK BIS Z-HW-003
Holding RFID system
Holder for installing antennas BIS U-3xx
Stainless steel (1.4571)
121 × 57 mm
Screws
—
—
Page 501

BAM01KN BIS Z-HW-004
Holding RFID system
Fixing for signal converters BIS U-602x
Aluminum, black
106 x 43 x 4.6 mm
Screws
—
—
Page 501

BAM0336 BIS Z-HW-008
Holding RFID system
Holder for mounting data carriers BIS M-135/138
PPS, black
86 x 39.5 x 63 mm
Screws
-25...240 °C
-25...240 °C
Page 501

BAM0337 BIS Z-HW-009
Holding RFID system
Holder for mounting data carriers BIS M-134/137
PPS, black
86 x 39.5 x 63 mm
Screws
-25...240 °C
-25...240 °C
Page 501

BAM012M BIS Z-MP-001
Holding RFID system
Metal mounting plate for data carriers BIS M-15x
Stainless steel (1.4310)
40 × 0.4 mm
—
-30...70 °C
-30...70 °C
Page 501

	BAM012N BIS Z-ZA-001	BAM012A BIS C-300-HG1	BAM012J BIS Z-HG-002	
Principle of operation	Access protection	Handle	Handle	
Use	Fixing for signal converters BIS U-602x	Socket for read/write heads Ø 14,5 mm	Socket for read/write heads Ø 18 mm	
Material	PA 6.6 black (nut) POM black (holder)	POM black	POM black	
Dimension	Ø 40 x 45 mm	Ø 14.5 x 120 mm	Ø 40 x 125 mm	
Mounting	Thread M30x1.5	—	—	
Ambient temperature	0...70 °C	0...70 °C	0...70 °C	
Ambient temperature	0...70 °C	0...70 °C	0...70 °C	
Productview	Page 502	Page 502	Page 502	

	BAM012K BIS Z-HG-003				
	Handle				
	Socket for read/write heads Ø 30 mm				
	POM black				
	Ø 40 x 125 mm				
	—				
	0...70 °C				
	0...70 °C				
	Page 502				

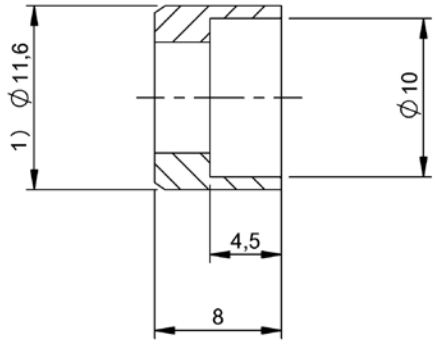

1) see remarks

BAM0127

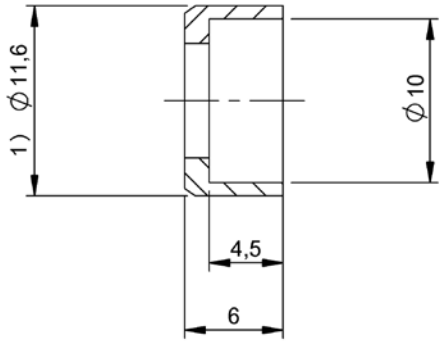

1) see remarks

BAM0128

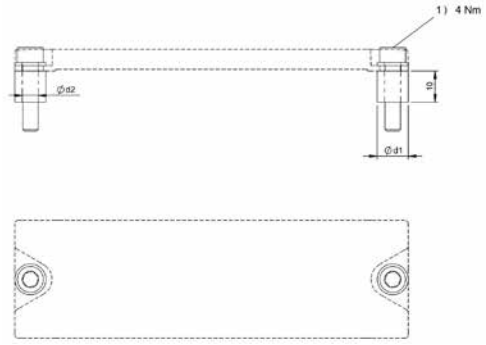

1) Tightening torque

BAM01LW

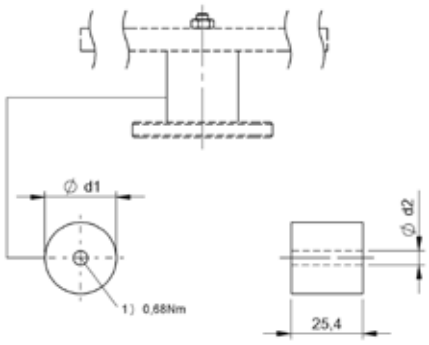

1) Tightening torque

BAM020R

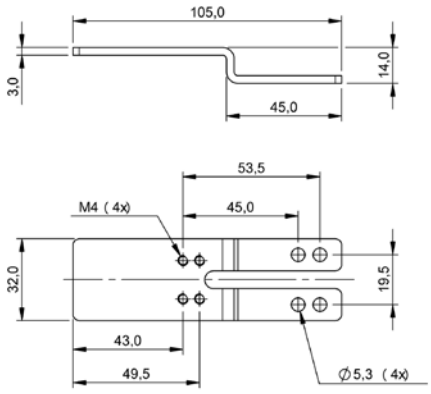

BAM01MY

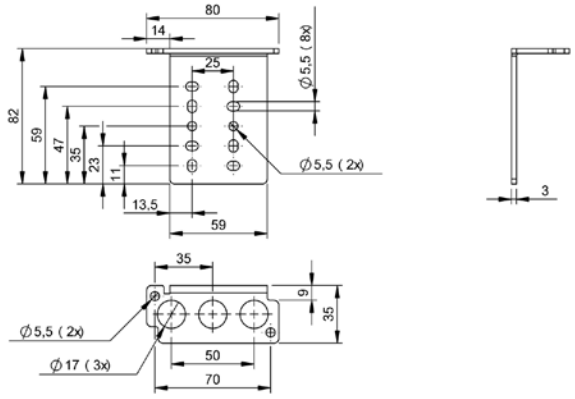

BAM02PN

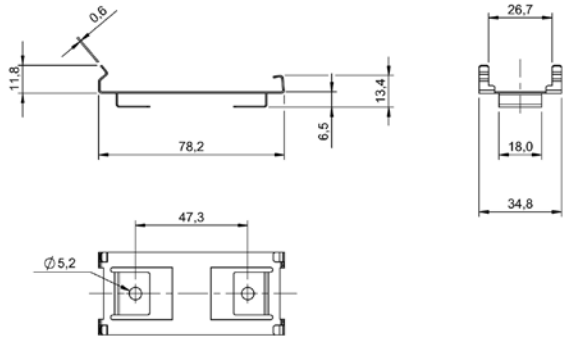

BAM01Y3

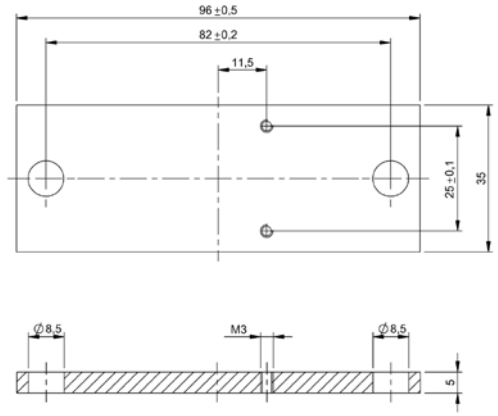

BAM012E

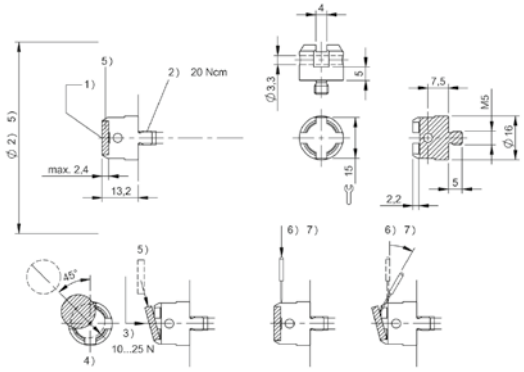

1) Sensing surface, 2) Tightening torque, 3) see remarks, 4) Data carrier installation, 5) Data carrier, 6) Caution: Protect eyes, 7) Replace data carrier

BAM012H

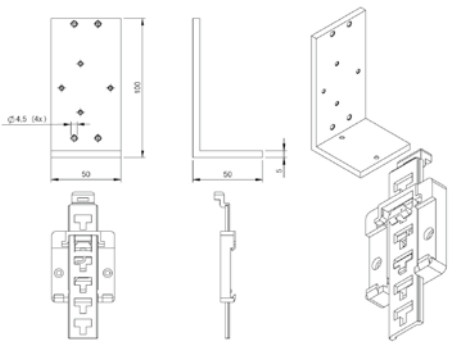

BAM012L

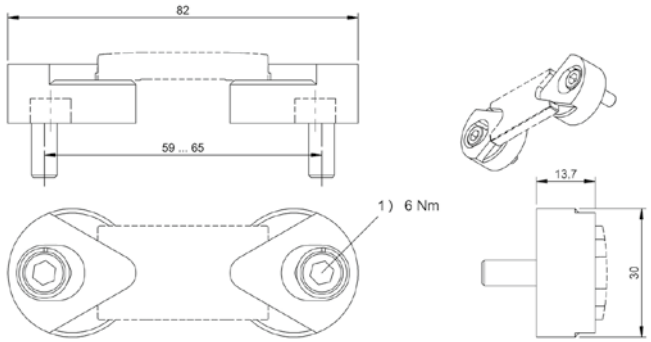

1) Tightening torque

BAM01FT

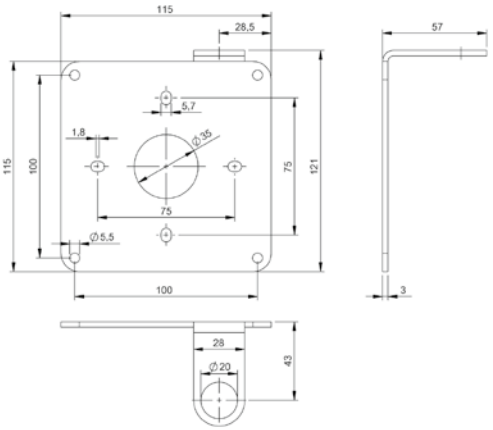

BAM01JK

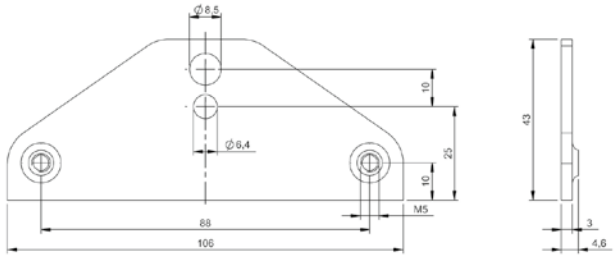

BAM01KN

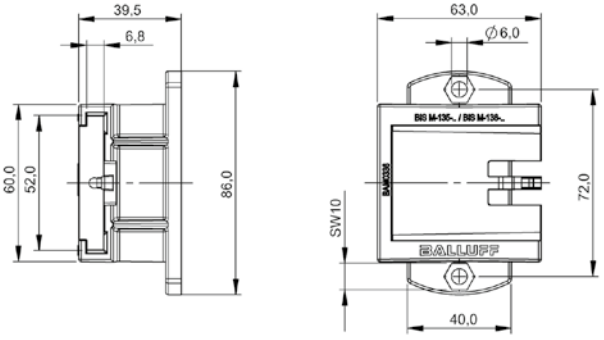

BAM0336

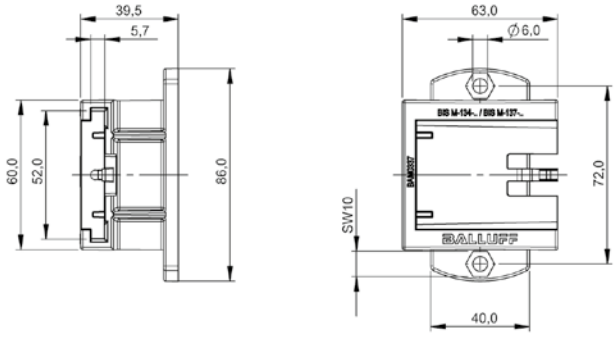

BAM0337

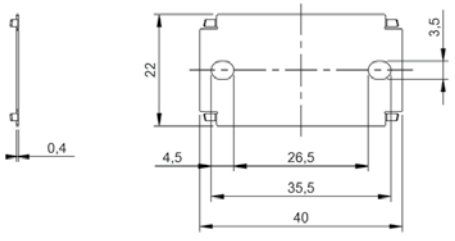

BAM012M

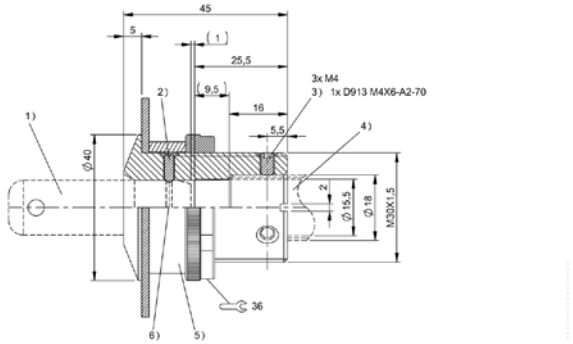

1) Data carrier, 2) Spring-loaded compression piece, 3) Threaded pin, 4) Read/write head, 5) Spacer ring, 6) Notch in data carrier

BAM012N

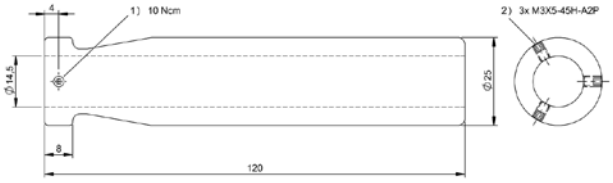

1) Tightening torque, 2) Threaded pin

BAM012A

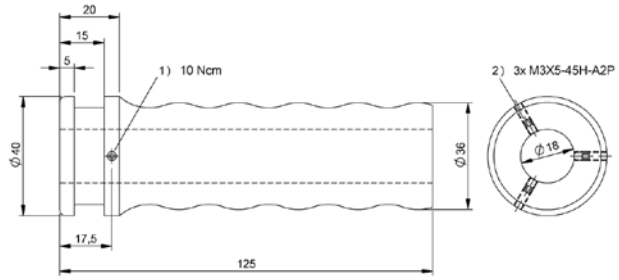

1) Tightening torque, 2) Threaded pin

BAM012J

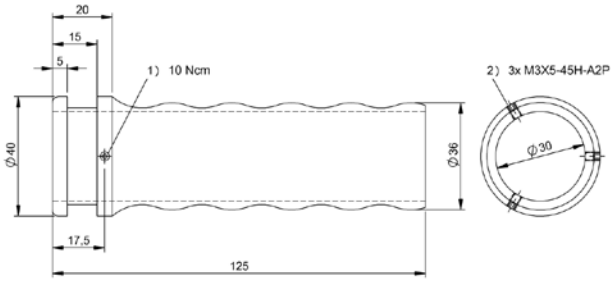

1) Tightening torque, 2) Threaded pin

BAM012K

	BAM02NM BAM BD-LG-003-0900	BAM02NN BAM BD-LG-003-1200	BAM02NP BAM BD-LG-003-1650	
Principle of operation	Tilted mirror	Tilted mirror	Tilted mirror	
Use	For floor mount of safety light curtain BLG	For floor mount of safety light curtain BLG	For floor mount of safety light curtain BLG	
Material	Glass painted yellow Steel	Glass painted yellow Steel	Glass painted yellow Steel	
Dimension	880 x 36 x 89 mm	1180 x 36 x 89 mm	1630 x 36 x 89 mm	
Mounting	Screws	Screws	Screws	
Productview	Page 508	Page 508	Page 508	

	BAM02NF BAM MB-LG-024-1000-1	BAM02NH BAM MB-LG-024-1200-1	BAM02NJ BAM MB-LG-024-1650-1	
Principle of operation	Holding Safety Light Curtains	Holding Safety Light Curtains	Holding Safety Light Curtains	
Use	For safety light curtain BLG	For safety light curtain BLG	For safety light curtain BLG	
Material	Steel painted yellow Aluminum	Steel painted yellow Aluminum	Steel painted yellow Aluminum	
Dimension	1018 x 195 x 195 mm	1218 x 195 x 195 mm	1668 x 195 x 195 mm	
Mounting	Screws	Screws	Screws	
Productview	Page 508	Page 509	Page 509	

	BAM02NR BAM BD-LG-003-1900	BAM02N6 BAM IA-XA-017-01	BAM02N7 BAM IA-XA-017-02	BAM02NC BAM MB-LG-023-B13-3	BAM02NE BAM MB-LG-024-0600-1
	Tilted mirror	Accessories Safety Light Curtains	Accessories Safety Light Curtains	Accessories Safety Light Curtains	Holding Safety Light Curtains
	For floor mount of safety light curtain BLG	For safety light curtain BLG	For safety light curtain BLG	For safety light curtain BLG	For safety light curtain BLG
	Glass painted yellow Steel	Rubber, Shore hardness 57	Rubber, Shore hardness 57	Steel zinc plated	Steel painted yellow Aluminum
	1880 x 36 x 89 mm	Ø 25 x 20 mm	Ø 25 x 20 mm	35 x 29.7 x 39.6 mm	618 x 195 x 195 mm
	Screws	Screws	Screws	Screws	Screws
	Page 508	Page 508	Page 508	Page 508	Page 508

	BAM02NK BAM MB-LG-024-1900-1	BAM02N2 BAM MC-LG-036-T01-3	BAM02MZ BAM MC-LG-037-B07-3	BAM02N0 BAM MC-LG-038-B07-01-3	BAM02N1 BAM MC-LG-038-B07-02-3
	Holding Safety Light Curtains	Accessories Safety Light Curtains	Accessories Safety Light Curtains	Accessories Safety Light Curtains	Accessories Safety Light Curtains
	For safety light curtain BLG	For safety light curtain BLG	For safety light curtain BLG	For safety light curtain BLG	For safety light curtain BLG
	Steel painted yellow Aluminum	Steel zinc plated	Steel zinc plated	Anodized aluminum	Anodized aluminum
	1918 x 195 x 195 mm	70 x 195 x 41 mm	34.5 x 37.8 x 30.7 mm	34.5 x 195 x 12 mm	34.5 x 195 x 12 mm
	Screws	Screws, terminals	Screws, terminals	Screws	Clamps
	Page 509	Page 509	Page 509	Page 509	Page 509

	BAM02N3 BAM MC-LG-040-B08-3	BAM02N5 BAM MC-LG-041-B07-3-L	BAM02N4 BAM MC-LG-041-B07-3-S	
Principle of operation	Accessories Safety Light Curtains	Accessories Safety Light Curtains	Accessories Safety Light Curtains	
Use	For safety light curtain BLG	For safety light curtain BLG	For safety light curtain BLG	
Material	Steel zinc plated	Steel zinc plated	Steel zinc plated	
Dimension	50 x 195 x 195 mm	34.5 x 30 x 26.5 mm	34.5 x 30 x 26.5 mm	
Mounting	Screws	Screws, terminals	Screws, terminals	
Productview	Page 509	Page 509	Page 509	

	BAM02P9 BAM TO-LG-011-14	BAM02PA BAM TO-LG-011-30			
	Test rod Safety Light Curtains	Test rod Safety Light Curtains			
	For safety light curtain BLG	For safety light curtain BLG			
	Aluminum anodized, black	Aluminum anodized, black			
	Ø 14 x 300 mm	Ø 30 x 300 mm			
	—	—			
	Page 510	Page 510			

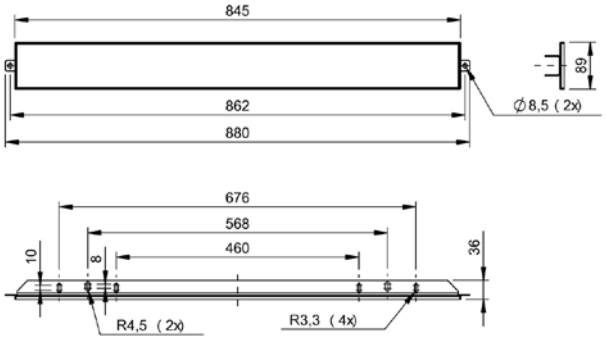

BAM02NM

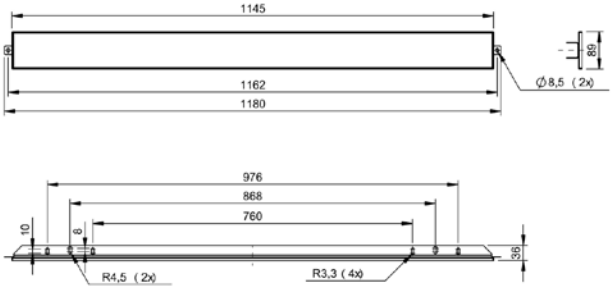

BAM02NN

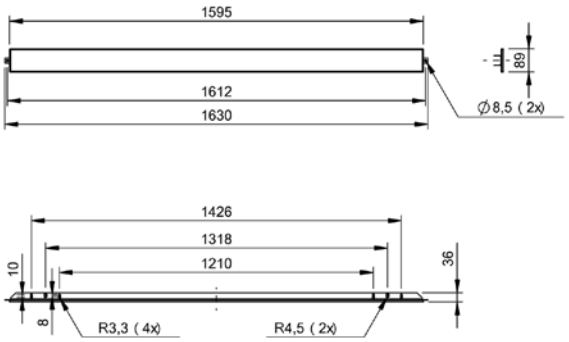

BAM02NP

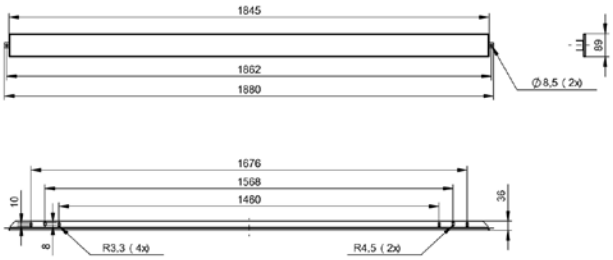

BAM02NR

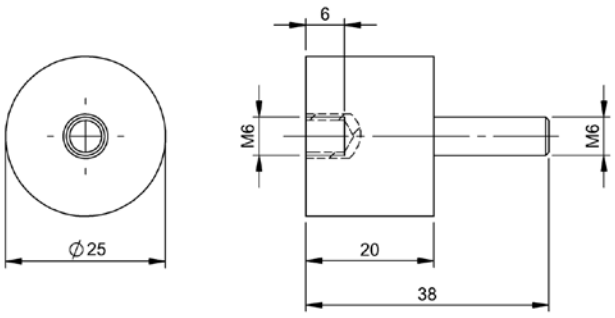

BAM02N6, BAM02N7

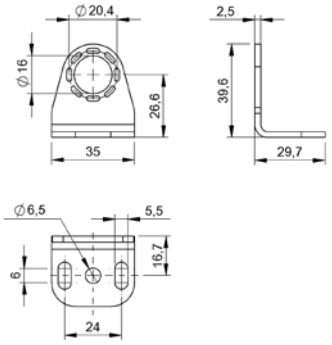

BAM02NC

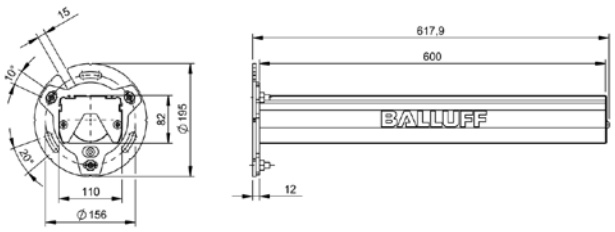

BAM02NE

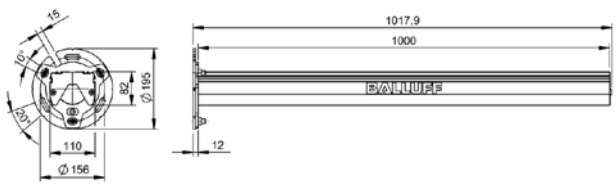

BAM02NF

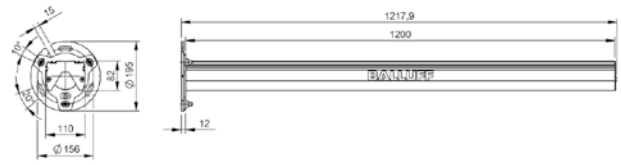

BAM02NH

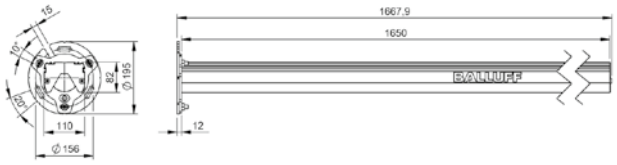

BAM02NJ

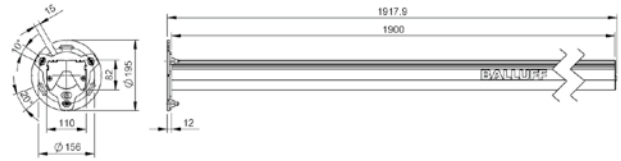

BAM02NK

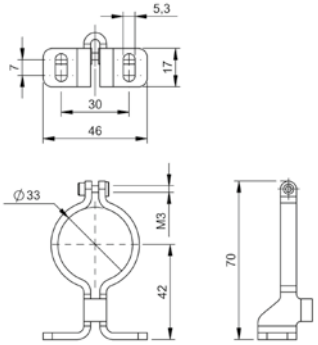

BAM02N2

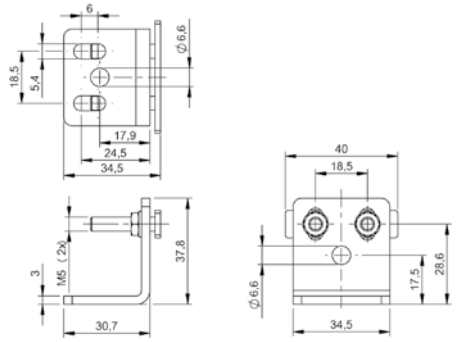

BAM02MZ

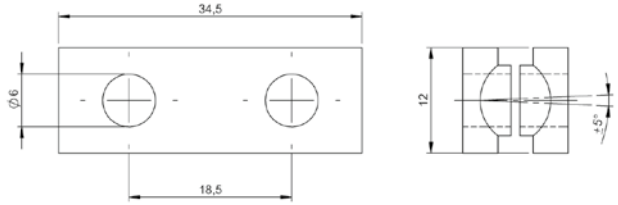

BAM02N0, BAM02N1

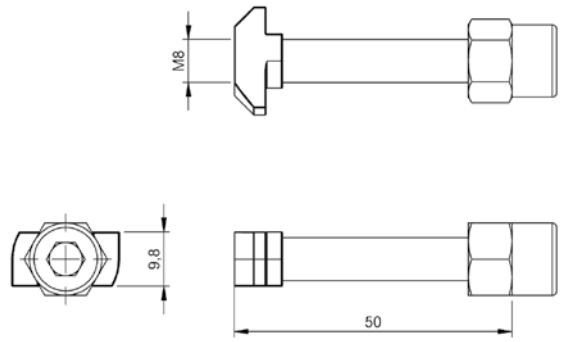

BAM02N3

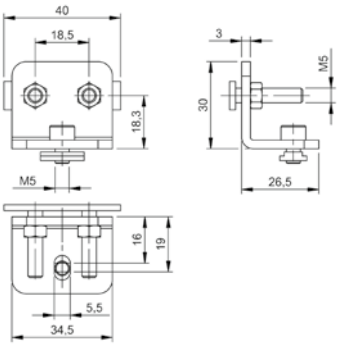

BAM02N5, BAM02N4

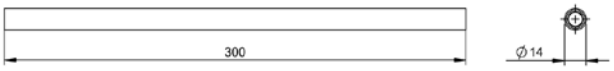

BAM02P9

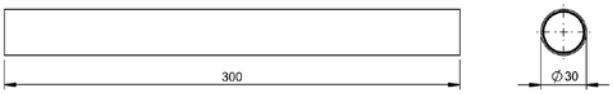

BAM02PA

	BAM02HE BAM MB-XA-021-B12-4	BAM02HF BAM MB-XA-022-B12-4	BAM02UY BAM MB-X0-028-B37-3	
Version	Mounting brackets	Mounting brackets	Mounting brackets	
Use	for BLA Light Array	for BLA Light Array	for photoelectric distance sensors BOD 37M	
Material	Stainless steel (1.4301)	Stainless steel (1.4301)	Steel Zinc plated	
Dimension	80 x 78 x 75 mm	80 x 38 x 75 mm	118 x 2.5 x 75 mm	
Mounting	Screws	Screws	Screws	
Productview	Page 518	Page 518	Page 518	

	BAM00T0 BOS 18,0-HW-3	BAM00T2 BOS 18,0-HW-6	BAM01YW BAM MB-XA-013-Q08-4	
Version	Mounting brackets, 2 adjustable axes	Mounting brackets, 3 adjustable axes	Mounting brackets, 2 adjustable axes	
Use	for photoelectric sensors BOS 11K, for photoelectric sensors BOS 16K, for photoelectric sensors BOS 18	for photoelectric sensors BOS 11K, for photoelectric sensors BOS 16K, for photoelectric sensors BOS 18	for photoelectric sensors BOS Q08M	
Material	Steel Zinc plated	Steel Zinc plated	Stainless steel (1.4301)	
Dimension	25 x 43 x 32 mm	42 x 50 x 50 mm	50 x 14 x 18 mm	
Mounting	Screws	Screws	Screws	
Productview	Page 519	Page 519	Page 519	

	BAM037F BMS AD-M-005-D12/X01	BAM037H BMS AD-M-005-D12/X02	BAM037R BMS AD-M-005-D12/X03	BAM00PT BOS 11-HW-1	BAM00RY BOS 18,0-HW-1
	Adjusting unit	Adjusting unit	Adjusting unit	Mounting bracket	Mounting brackets, 2 adjustable axes
	for photoelectric sensors BOS 5K, for photoelectric sensors BOS 6K, for photoelectric sensors BOS R020	for photoelectric sensors BOS 21M, for photoelectric sensors BOS 23K, for photoelectric sensors BOS Q08, for photoelectric distance sensors BOD 24K	for sensors and fiber optics Ø2, for sensors and fiber optics Ø3, for sensors and fiber optics Ø4, for sensors and fiber optics Ø5, for photoelectric sensors BOH Q06, for photoelectric sensors BOH R002, for photoelectric sensors BOH R010, for photoelectric sensors BOH Z001	for photoelectric sensors BOS 11K, for photoelectric sensors BOS	for photoelectric sensors BOS 18
	Aluminum anodized, natural Nickel-plated brass	Aluminum anodized, natural Nickel-plated brass	Aluminum anodized, natural Nickel-plated brass	Stainless steel	Steel Zinc plated
	33 x 12.5 x 92 mm	50 x 12.5 x 116 mm	28 x 14.5 x 98 mm	32 x 45.5 x 66.6 mm	20 x 35 x 35 mm
	Screws, clamps	Screws, clamps	Screws, clamps	Screws	Screws
	Page 518	Page 518	Page 518	Page 518	Page 518

	BAM00T4 BOS 2-HW-1	BAM00T5 BOS 2-HW-2	BAM00T6 BOS 2-HW-3	BAM00U5 BOS 5-HW-1	BAM00U6 BOS 5-HW-2
	Mounting brackets, 3 adjustable axes	Mounting brackets, 2 adjustable axes	Mounting brackets, 2 adjustable axes	Mounting brackets, 2 adjustable axes	Mounting brackets, 1 adjustable axis
	for photoelectric sensors BOS 2K	for photoelectric sensors BOS 2K	for photoelectric sensors BOS 2K	for photoelectric sensors BOS 5K	for photoelectric sensors BOS 5K
	ABS	Steel Zinc plated	Steel Zinc plated	Stainless steel	Stainless steel
	17.5 x 25 x 44.7 mm	11 x 17 x 36 mm	11 x 24 x 18 mm	14 x 21.5 x 42.5 mm	21.5 x 55.2 x 12.7 mm
	Screws	Screws	Screws	Screws	Screws
	Page 519	Page 519	Page 519	Page 519	Page 519

	BAM00U7 BOS 5-HW-3	BAM00UF BOS 5-HW-9	BAM0227 BAM MB-X0-014-B10-4-BLS	
Version	Mounting brackets, 2 adjustable axes	Mounting bracket	Mounting brackets	
Use	for photoelectric sensors BOS 5K	for photoelectric sensors BOS 5K, for photoelectric sensors BOS	for photoelectric sensors BOS 6K	
Material	Stainless steel	Steel Zinc plated	Stainless steel (1.4301)	
Dimension	29 x 56 x 46 mm	29 x 56 x 65 mm	76.4 x 16.2 x 30 mm	
Mounting	Screws	Screws	Screws	
Productview	Page 520	Page 520	Page 520	

	BAM0305 BMS CS-M-D12-S6K-03	BAM00UH BOS 6-HW-1	BAM02ZE BAM MB-X0-032-B16-1-BR2	
Version	Holder	2 adjustable axes	Mounting brackets, 2 adjustable axes	
Use	for photoelectric sensors BOS 6K	for photoelectric sensors BOS 6K	for photoelectric sensors BOS 21M	
Material	Die-cast zinc Stainless steel (1.4301)	Steel Zinc plated	Aluminum anodized, natural	
Dimension	Ø 32 x 16 mm	14 x 30 x 20 mm	50 x 61 x 40 mm	
Mounting	Screws, clamps	Screw M3	Screws	
Productview	Page 521	Page 521	Page 521	

	BAM0228 BAM MB-XO-014-B10-4-RLS	BAM0225 BAM MB-XO-014-B10-4-RRR	BAM022A BAM MC-XO-030-6K-4	BAM0306 BMS CS-M-D12-FX18-02	BAM0304 BMS CS-M-D12-S6K-01
	Mounting brackets	Mounting brackets	Mounting brackets	Mounting block	Holder
	for photoelectric sensors BOS 6K	for photoelectric sensors BOS 6K	for photoelectric sensors BOS 6K	for holding rods with Ø12 mm, for photoelectric sensors BOS 23K	for photoelectric sensors BOS 6K
	Stainless steel (1.4301)	Stainless steel (1.4301)	Aluminum Anodized	Die-cast zinc	Die-cast zinc
	60 x 16.2 x 47 mm	60 x 33.2 x 32 mm	32 x 16.2 x 16 mm	12 x 24 x 37 mm	Ø 32 x 16 mm
	Screws	Screws	Screws	Screws, clamps	Screws, clamps
	Page 520	Page 520	Page 520	Page 520	Page 520

	BAM00T7 BOS 21-AD-1	BAM00T9 BOS 21-HW-1	BAM00TA BOS 21-HW-2	BAM01FK BAM MB-XO-006-B05-4	BAM01FM BAM MB-XO-007-B05-4
	Holder, 1 adjustable axis	Mounting brackets, 2 adjustable axes	Mounting brackets, 2 adjustable axes	Mounting brackets, 2 adjustable axes	Mounting brackets, 1 adjustable axis
	for photoelectric sensors BOS 25K, for photoelectric sensors BOS 26K, for photoelectric sensors BOS 21M, For BOS R-1 reflectors	for photoelectric sensors BOS 21M	for photoelectric sensors BOS 21M	for photoelectric sensors BOS 23K	for photoelectric sensors BOS 23K
	Aluminum Anodized	Steel Zinc plated	Steel Zinc plated	Stainless steel	Stainless steel (1.4301)
	50 x 48 x 30 mm	20 x 50 x 26.5 mm	25 x 28 x 40 mm	25 x 40 x 64.5 mm	44.3 x 58 x 65 mm
	Screws	Screws	Screws	Screws	Screws
	Page 521	Page 521	Page 521	Page 521	Page 521

	BAM00TK BOS 26-HW-1	BAM02KL BMS CS-M-D12-B64K-12	BAM003E BMS AD-M-002-D12/D12	
Version	Mounting brackets, 2 adjustable axes	Mounting brackets	Adjusting unit	
Use	for photoelectric sensors BOS 26K	for photoelectric sensors BOS 64K	for sensors Ø12 mm	
Material	Steel Zinc plated	Aluminum Anodized	Stainless steel (1.4301)	
Dimension	19 x 48 x 47.6 mm	106 x 32 x 96 mm	57 x 45 x 50 mm	
Mounting	Screws	Screws	Screws, clamps	
Productview	Page 522	Page 522	Page 522	

	BAM0038 BMS AD-M-002-D12/D18	BAM00U8 BOS 5-HW-4	BAM00U9 BOS 5-HW-5	BAM00UA BOS 5-HW-6	BAM027E BAM MC-XO-034-23K-4
	Adjusting unit	Mounting brackets, 1 adjustable axis	Mounting brackets, 1 adjustable axis	Mounting brackets, 1 adjustable axis	Adjusting unit
	for sensors Ø18 mm	for BOS R-25 reflectors, for BOS R-10 reflectors	for BOS R-26 reflectors	for BOS R-9 reflectors, for BOS R-22 reflectors	for photoelectric sensors BOS 23K
	Stainless steel (1.4301)	Steel Zinc plated	Steel Zinc plated	Steel Zinc plated	—
	57 x 45 x 50 mm	28 x 58 x 113 mm	20 x 35 x 44.2 mm	20 x 50 x 61 mm	52.5 x 42 x 50 mm
	—	Screws	Screws	Screws	Screw M4
	Page 522	Page 522	Page 522	Page 522	Page 522

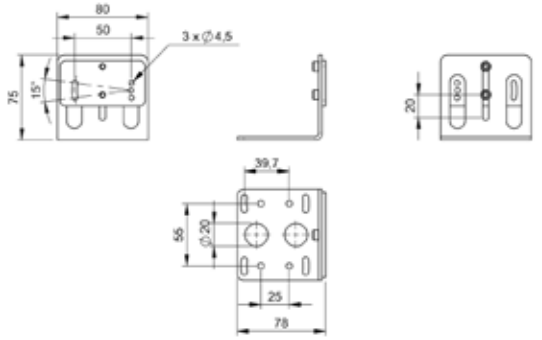

BAM02HE

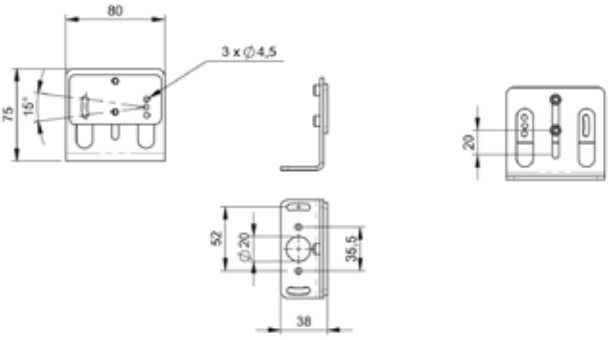

BAM02HF

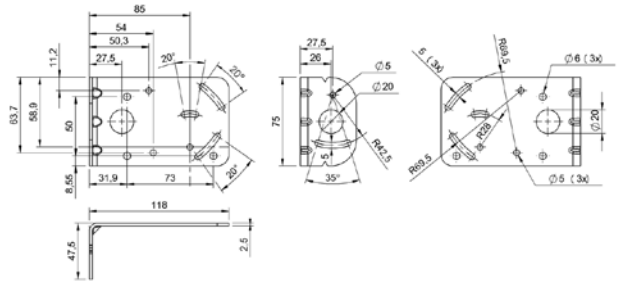

BAM02UY

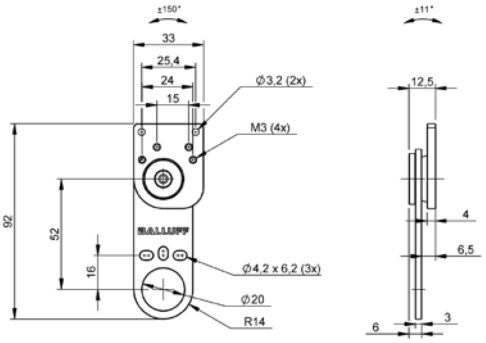

BAM037F

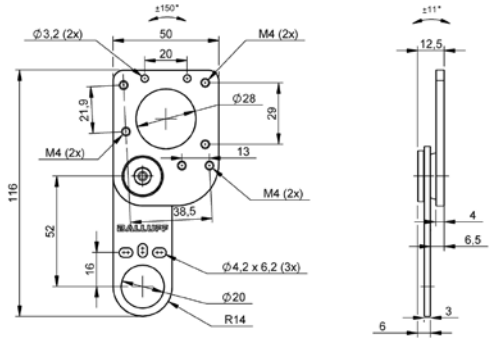

BAM037H

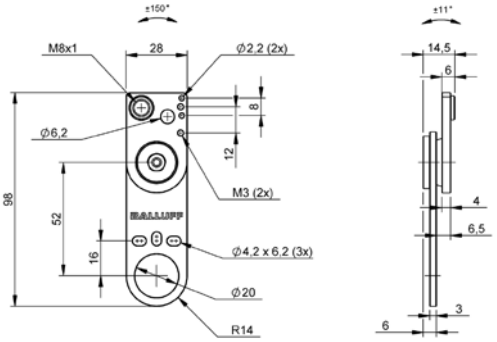

BAM037R

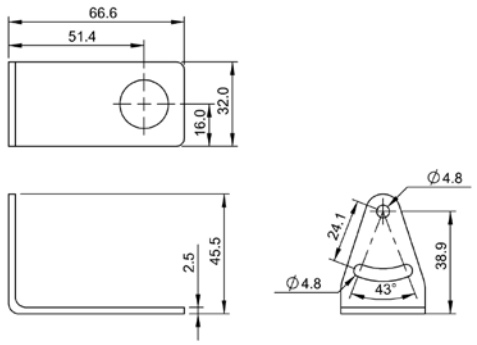

BAM00PT

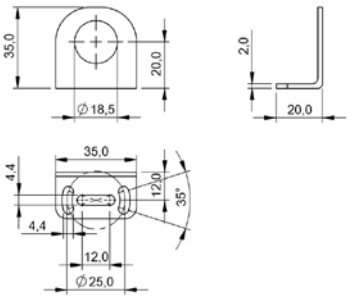

BAM00RY

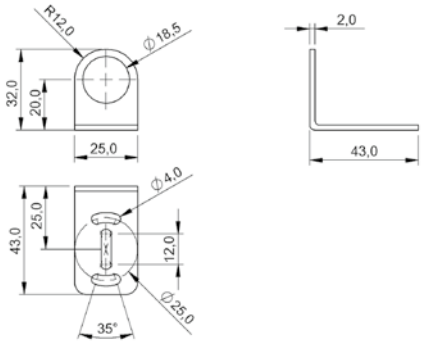

BAM00T0

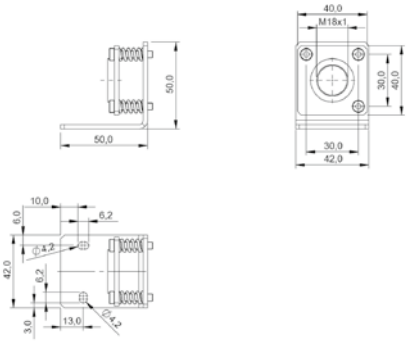

BAM00T2

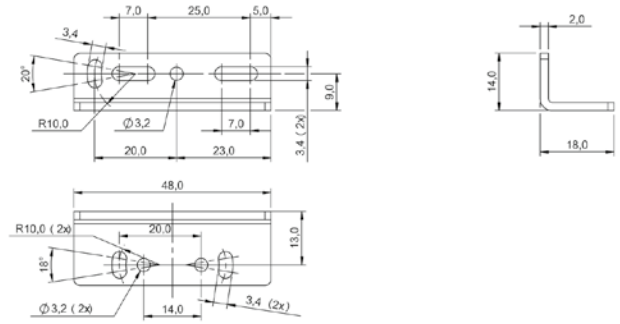

BAM01YW

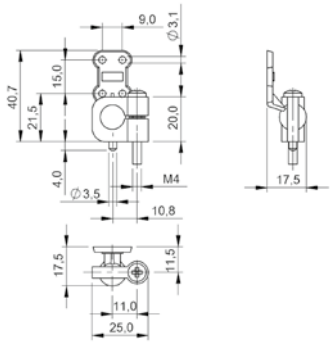

BAM00T4

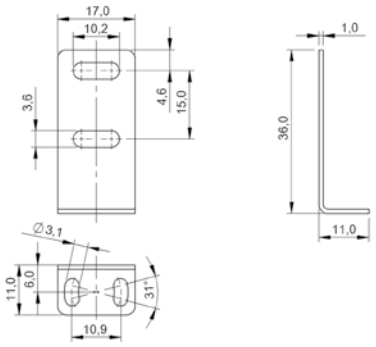

BAM00T5

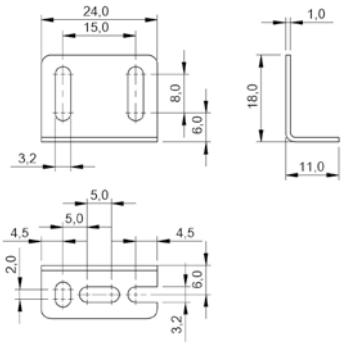

BAM00T6

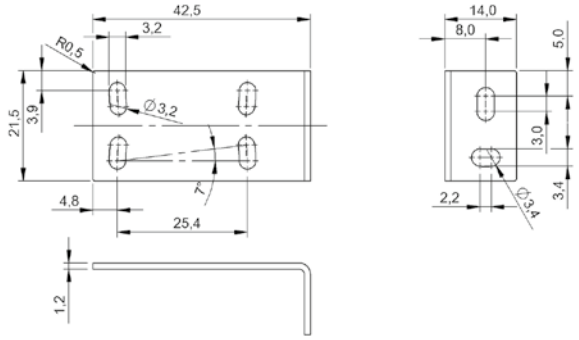

BAM00U5

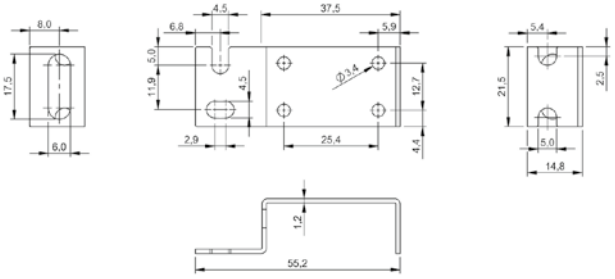

BAM00U6

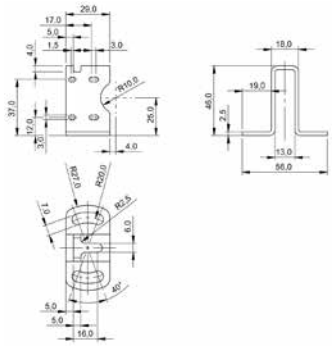

BAM00U7

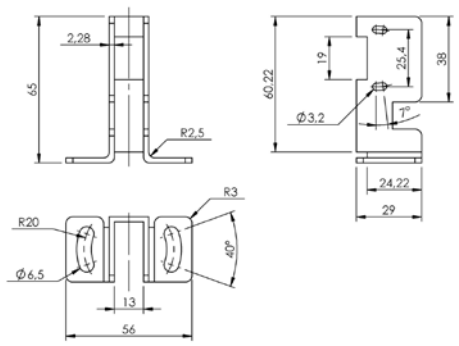

BAM00UF

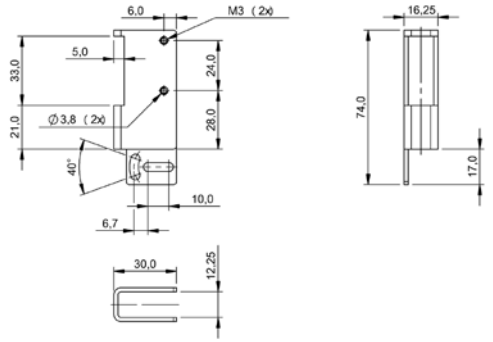

BAM0227

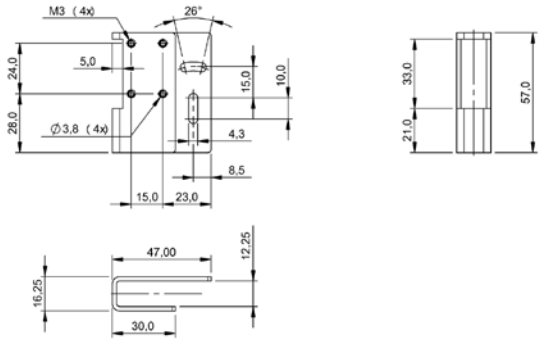

BAM0228

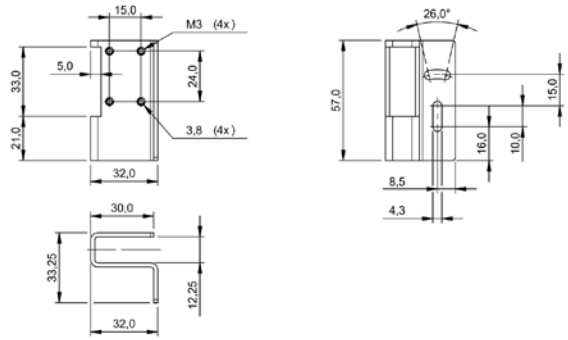

BAM0225

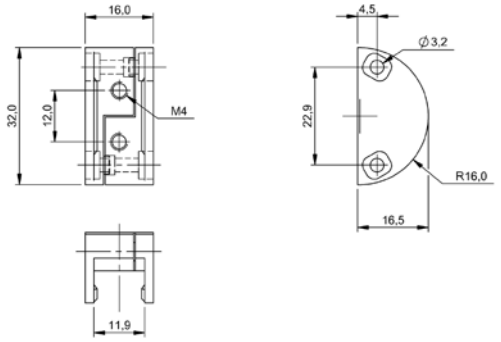

BAM022A

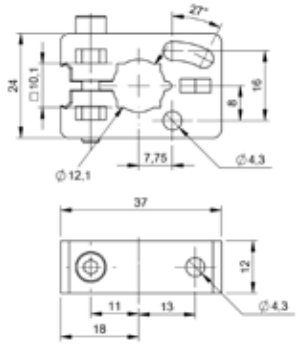

BAM0306

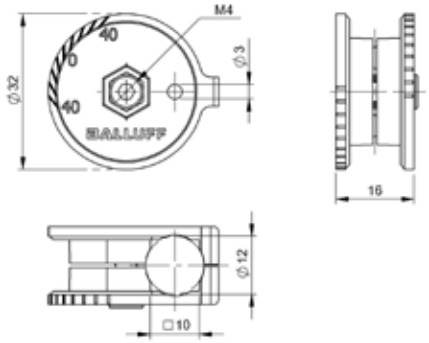

BAM0304

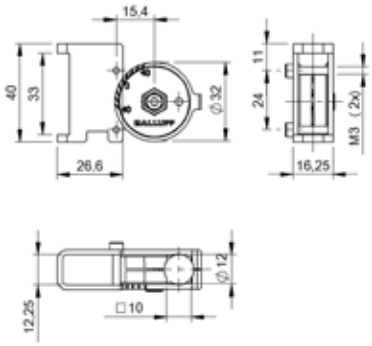

BAM0305

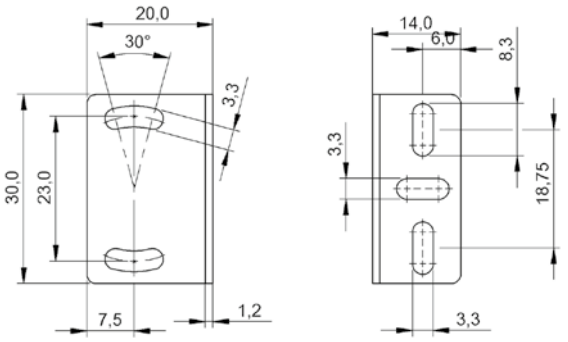

BAM00UH

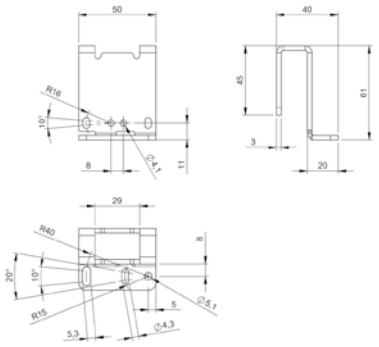

BAM02ZE

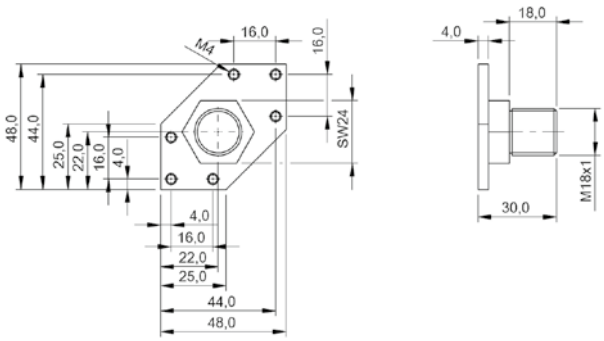

BAM00T7

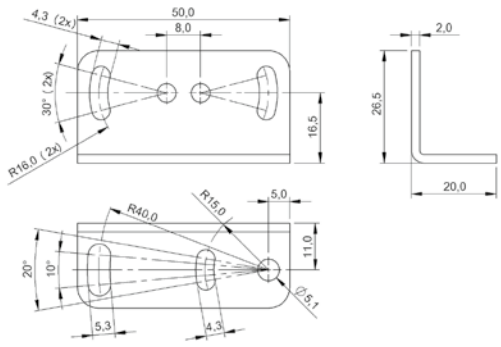

BAM00T9

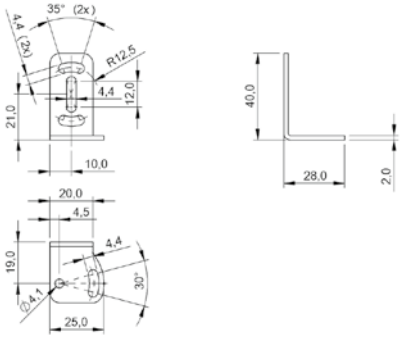

BAM00TA

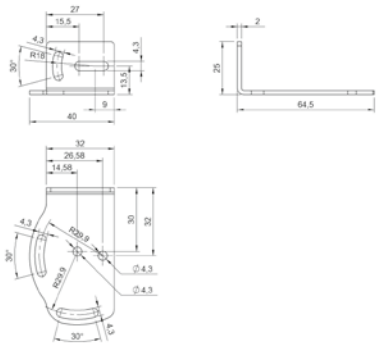

BAM01FK

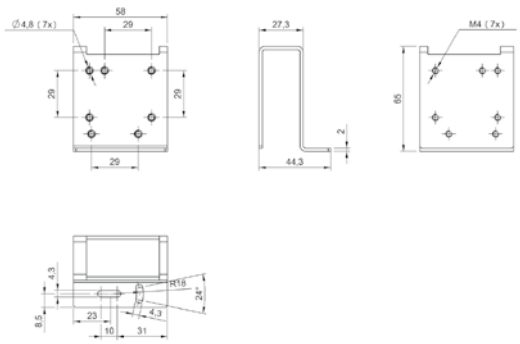

BAM01FM

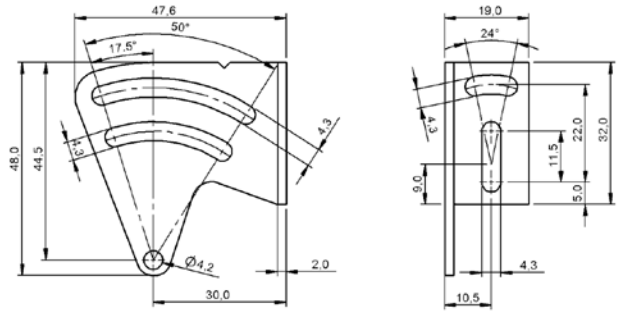

BAM00TK

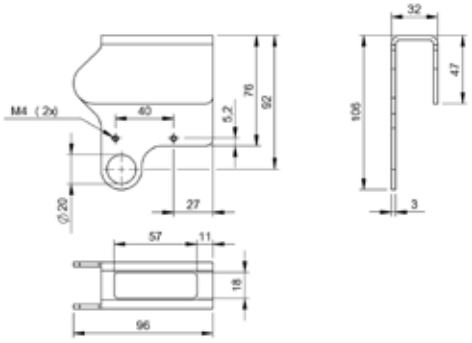

BAM02KL

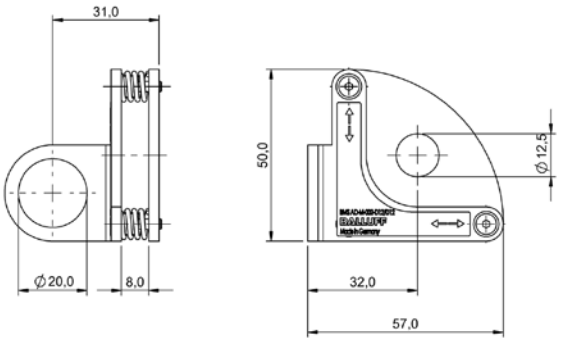

BAM003E

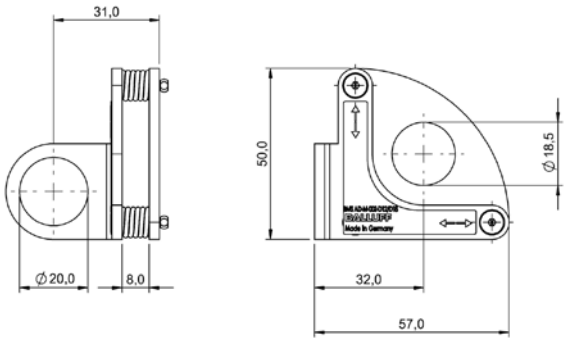

BAM0038

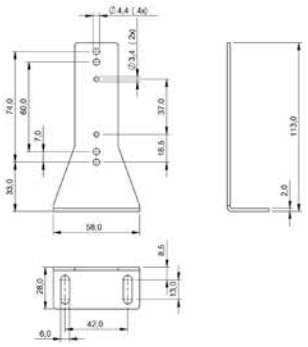

BAM00U8

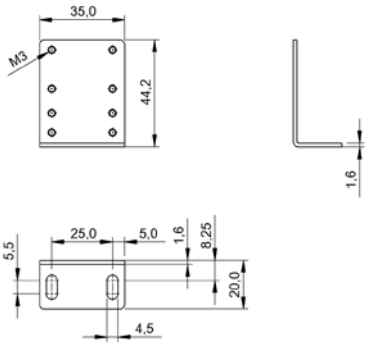

BAM00U9

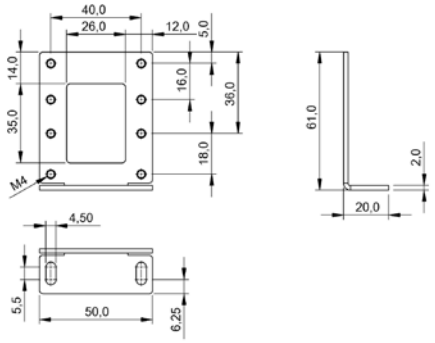

BAM00UA

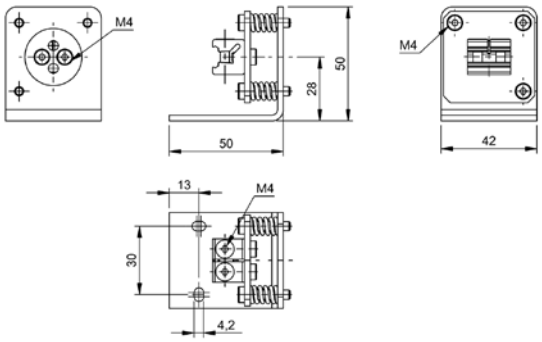

BAM027E

	BAM01K6 BMF 103-HW-100	BAM01K7 BMF 103-HW-102	BAM00K9 BMF 103-HW-42	
Principle of operation	BMF mounting bracket	BMF mounting bracket	BMF mounting bracket	
Application	Pneumatic flat cylinder with integrated groove	Pneumatic flat cylinder with integrated groove	Pneumatic flat cylinder with integrated groove	
Use	for magnetic sensors BMF 103	for magnetic sensors BMF 103	for magnetic sensors BMF 103	
Material	Brass nickel plated	Brass nickel plated	Brass nickel plated	
Ambient temperature	-40...85 °C	-40...85 °C	-40...85 °C	
Productview	Page 528	Page 528	Page 528	

	BAM00L1 BMF 303-HW-31	BAM00L2 BMF 303-HW-33	BAM00L4 BMF 303-HW-40	
Principle of operation	BMF mounting bracket	BMF mounting bracket	BMF mounting bracket	
Application	Pneumatic cylinder with integrated groove	Pneumatic cylinder with integrated groove	Pneumatic cylinder with integrated groove	
Use	for magnetic sensors BMF 303	for magnetic sensors BMF 303	for magnetic sensors BMF 303	
Material	Nickel silver	Aluminum	Brass nickel plated	
Ambient temperature	-40...85 °C	-40...85 °C	-40...85 °C	
Productview	Page 529	Page 529	Page 529	

	BAM00KA BMF 103-HW-43	BAM00KN BMF 103-HW-85	BAM01K9 BMF 303-HW-101	BAM00KZ BMF 303-HW-28	BAM00L0 BMF 303-HW-30
	BMF mounting bracket	BMF mounting bracket	BMF mounting bracket	BMF mounting bracket	BMF mounting bracket
	Pneumatic flat cylinder with integrated groove	Pneumatic cylinder with integrated groove	Pneumatic cylinder with integrated groove	Pneumatic cylinder with integrated groove	Pneumatic cylinder with integrated groove
	for magnetic sensors BMF 103	for magnetic sensors BMF 103	for magnetic sensors BMF 303	for magnetic sensors BMF 303	for magnetic sensors BMF 303
	Brass nickel plated	Aluminum	Aluminum Anodized	Brass nickel plated	Brass nickel plated
	-40...85 °C	-40...85 °C	-40...85 °C	-40...85 °C	-40...85 °C
	Page 528	Page 528	Page 528	Page 528	Page 528

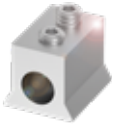

	BAM00L6 BMF 303-HW-51	BAM00L7 BMF 303-HW-59	BAM00L8 BMF 303-HW-60	BAM00LE BMF 303-HW-69	BAM00LF BMF 303-HW-80
	BMF mounting bracket	BMF mounting bracket	BMF mounting bracket	BMF mounting bracket	BMF mounting bracket
	Pneumatic cylinder with integrated groove, Holder suitable for 2 T slot dimension.	Pneumatic cylinder, round without groove or tie rod, Piston diameter 8 - 80 mm	Pneumatic cylinder with integrated groove, Used with BMF 303-HW-51, Holder suitable for 2 T slot dimension.	Pneumatic cylinder with integrated groove, Fabco Pancake cylinder	Pneumatic cylinder with integrated mounting rail
	for magnetic sensors BMF 303	for magnetic sensors BMF 303	for magnetic sensors BMF 303	for magnetic sensors BMF 303	for magnetic sensors BMF 303
	Aluminum Anodized	Aluminum	Aluminum	Aluminum	Aluminum Anodized
	-40...85 °C	-40...85 °C	-40...85 °C	-40...85 °C	-40...85 °C
	Page 529	Page 529	Page 529	Page 529	Page 529

	BAM01F0 BMF 303-HW-97	BAM01K8 BMF 305-HW-106	BAM00LJ BMF 305-HW-20	
Principle of operation	BMF mounting bracket	BMF mounting bracket	BMF mounting bracket	
Application	Pneumatic cylinder with integrated groove	Pneumatic cylinder with integrated groove	Pneumatic cylinder with integrated groove	
Use	for magnetic sensors BMF 303	for magnetic sensors BMF 305	for magnetic sensors BMF 305	
Material	Brass nickel plated	Aluminum Anodized	Brass nickel plated	
Ambient temperature	-40...85 °C	-40...85 °C	-40...85 °C	
Productview	Page 530	Page 530	Page 530	

	BAM01EZ BMF 305-HW-98	BAM01EY BMF 305-HW-99	BAM01M9 BMF 235-HW-109	
Principle of operation	BMF mounting bracket	BMF mounting bracket	BMF mounting bracket	
Application	Pneumatic cylinder with integrated groove	Pneumatic cylinder with integrated groove, Holder suitable for 2 T slot dimension.	Pneumatic cylinder with tie rods, Piston diameter: any	
Use	for magnetic sensors BMF 305	for magnetic sensors BMF 305	for magnetic sensors BMF 235	
Material	Brass nickel plated	Aluminum Anodized	Aluminum	
Ambient temperature	-40...85 °C	-40...85 °C	—	
Productview	Page 531	Page 531	Page 531	

BAM00LP BMF 305-HW-24	BAM00LT BMF 305-HW-26	BAM00LU BMF 305-HW-27	BAM00LW BMF 305-HW-32	BAM01C4 BMF 305-HW-92
BMF mounting bracket	BMF mounting bracket	BMF mounting bracket	BMF mounting bracket	BMF mounting bracket
Pneumatic cylinder, round without groove or tie rod, Piston diameter ≤8 - 80 mm	Pneumatic cylinder with integrated groove, Used with BMF 303-HW-51, Holder suitable for 2 T slot dimension., For slot dimensions see drawing	Pneumatic cylinder with integrated mounting rail	Pneumatic cylinder with integrated groove	Pneumatic cylinder with integrated groove
for magnetic sensors BMF 305	for magnetic sensors BMF 305	for magnetic sensors BMF 305	for magnetic sensors BMF 305	for magnetic sensors BMF 305
Brass nickel plated	Aluminum Anodized	Aluminum Anodized	Aluminum Anodized	Aluminum Anodized
-40...85 °C	-40...85 °C	-40...85 °C	-40...85 °C	-40...85 °C
Page 530	Page 530	Page 530	Page 530	Page 530

BAM01MA BMF 235-HW-110	BAM01MC BMF 235-HW-111	BAM01Y9 BMF 307-HW-112	BAM00KR BMF 10E-HW-19	
BMF mounting bracket	BMF mounting bracket	BMF mounting bracket	BMF mounting bracket	
Pneumatic cylinder with tie rods, Piston diameter: any	Pneumatic cylinder with tie rods, Piston diameter: any	Pneumatic cylinder, round without groove or tie rod, Piston diameter ≤8 - 110 mm	Pneumatic cylinder, round without groove or tie rod, Piston diameter 8 - 63 mm	
for magnetic sensors BMF 235	for magnetic sensors BMF 235	for magnetic sensors BMF 307, for magnetic sensors BMF 235	for magnetic sensors BMF 10E	
Aluminum	Aluminum	Aluminum	Stainless steel (1.4305)	
—	—	-40...85 °C	-40...85 °C	
Page 531	Page 531	Page 531	Page 531	

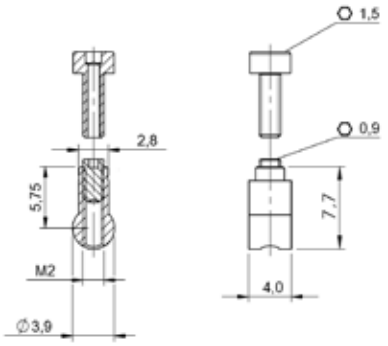

BAM01K6

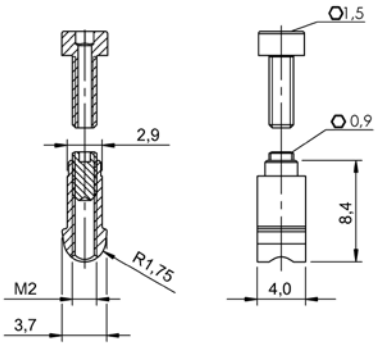

BAM01K7

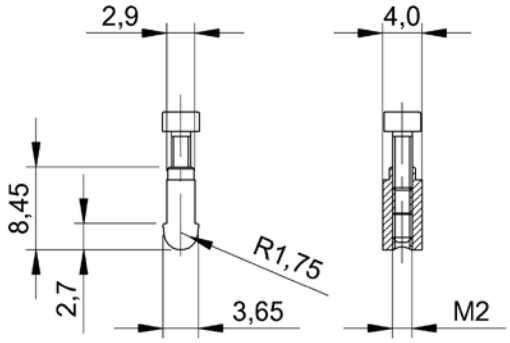

BAM00K9

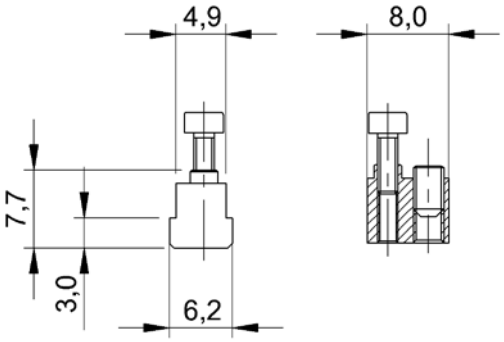

BAM00KA

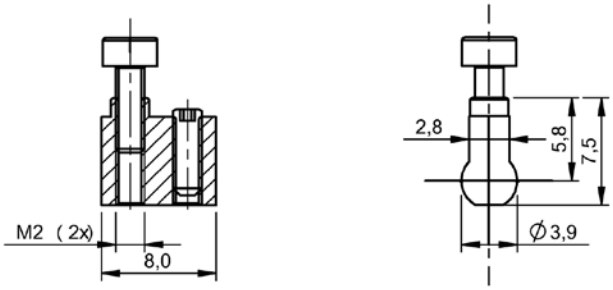

BAM00KN

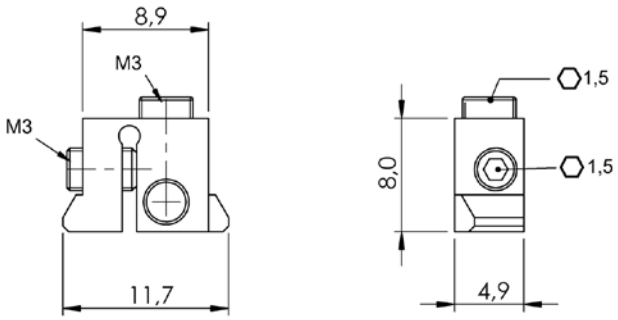

BAM01K9

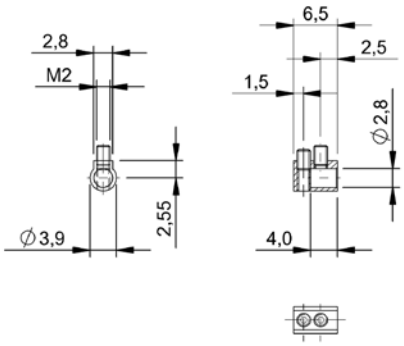

BAM00KZ

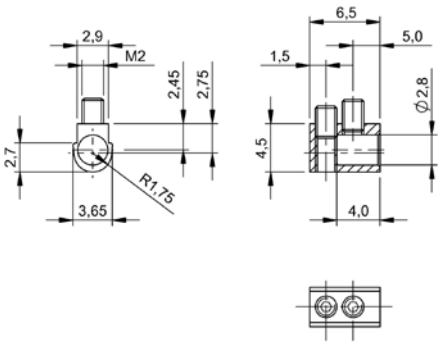

BAM00L0

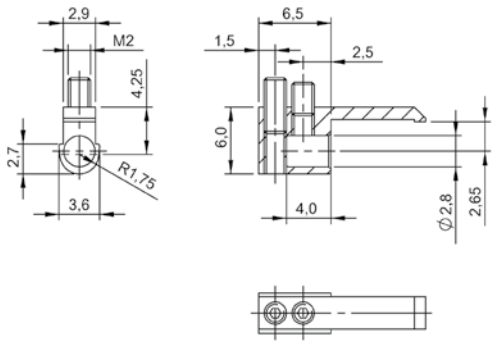

BAM00L1

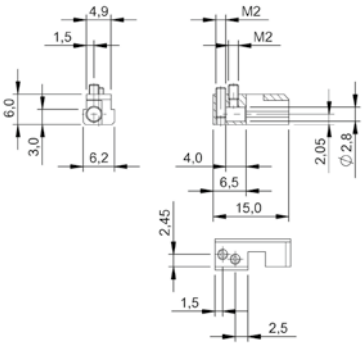

BAM00L2

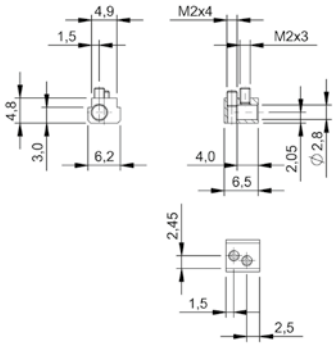

BAM00L4

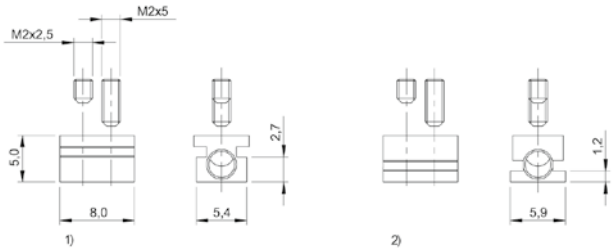

BAM00L6

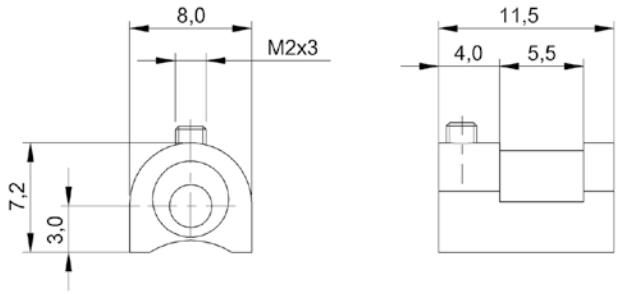

BAM00L7

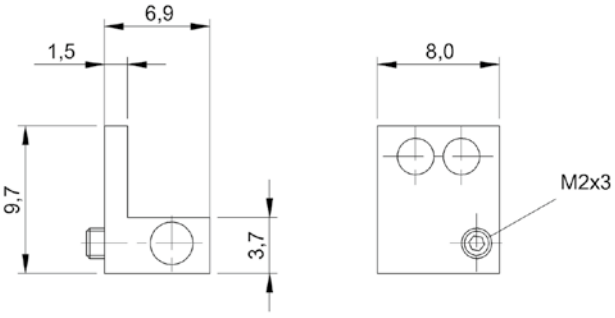

BAM00L8

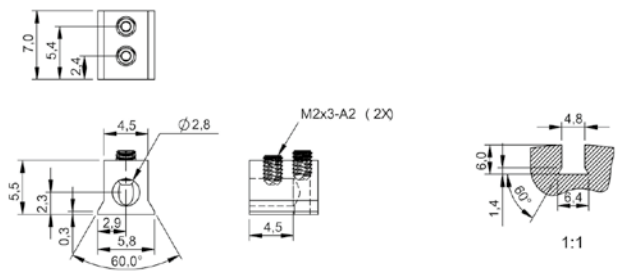

BAM00LE

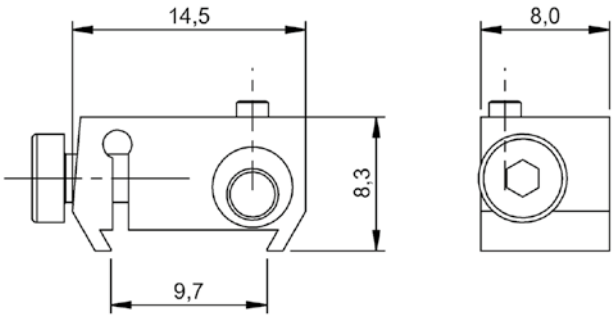

BAM00LF

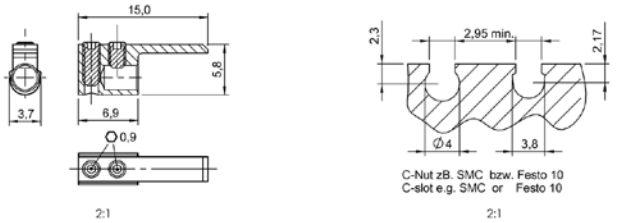

BAM01F0

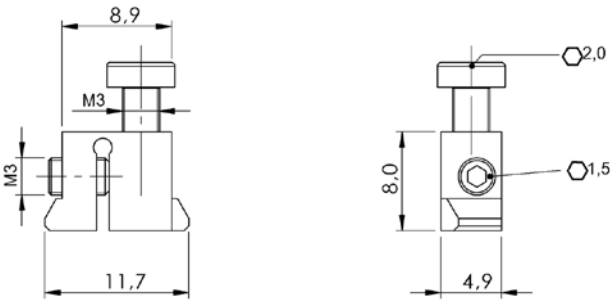

BAM01K8

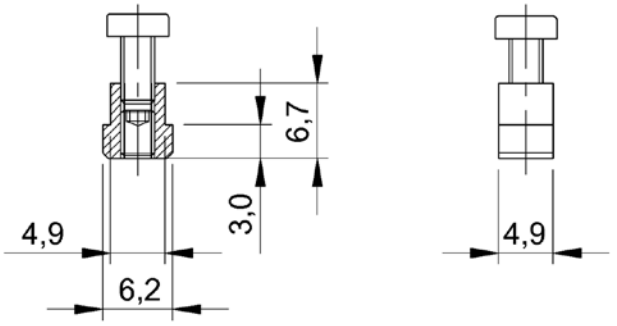

BAM00LJ

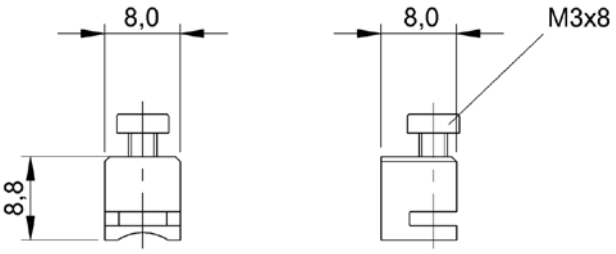

BAM00LP

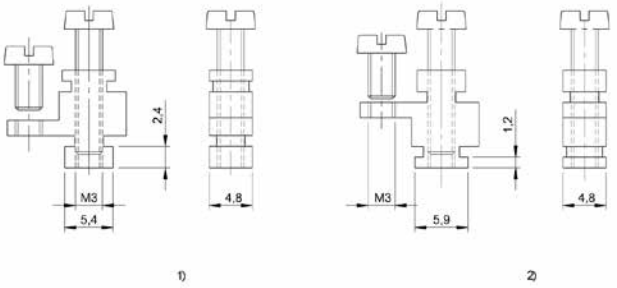

BAM00LT

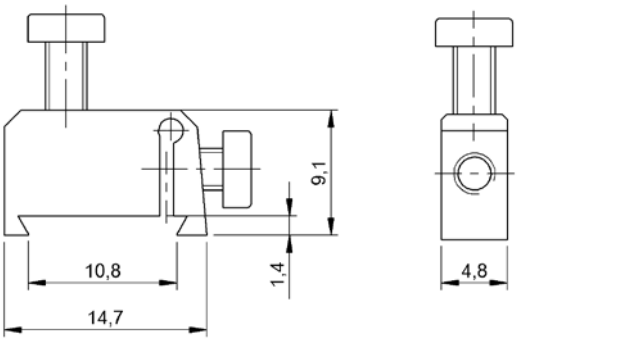

BAM00LU

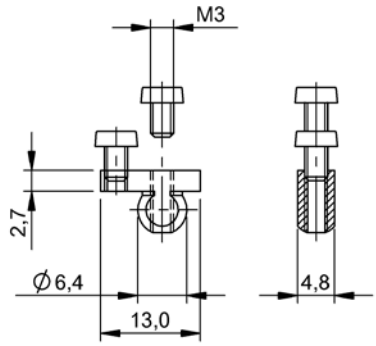

BAM00LW

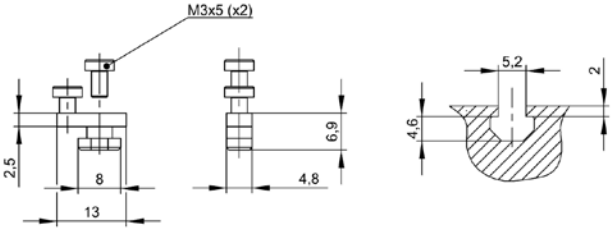

BAM01C4

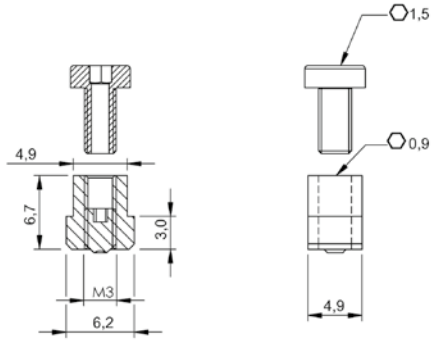

BAM01EZ

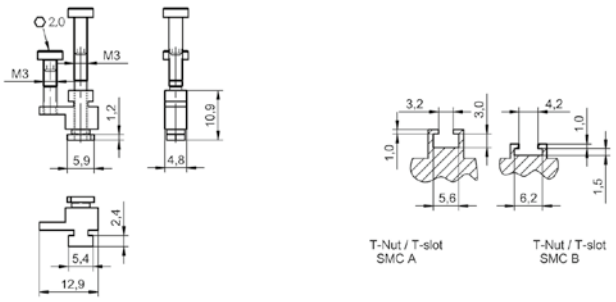

BAM01EY

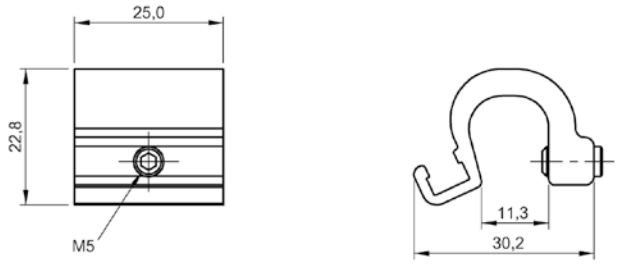

BAM01M9

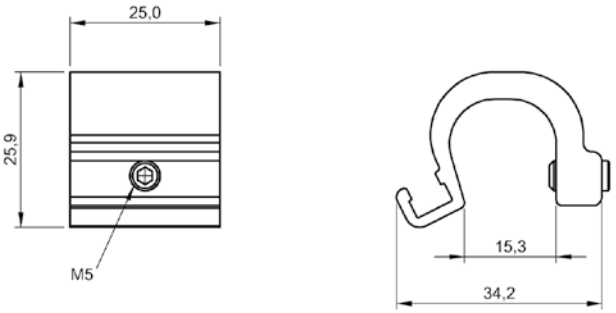

BAM01MA

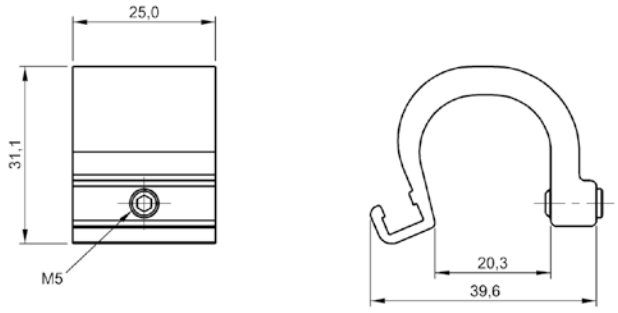

BAM01MC

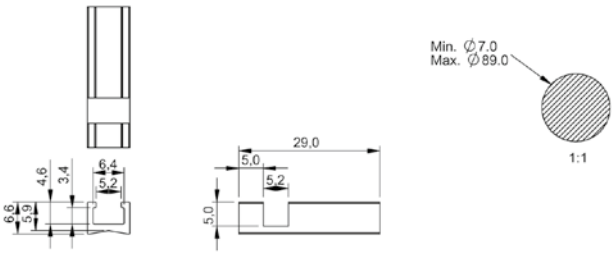

BAM01Y9

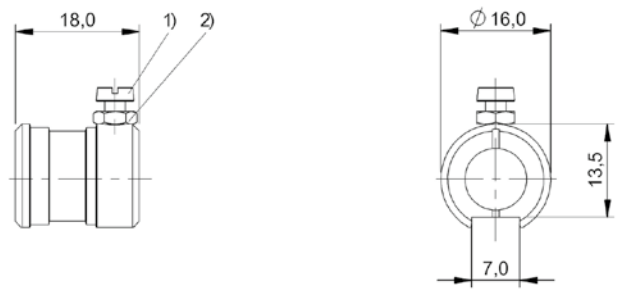

BAM00KR

	BAM010W BTL6-A-MF01-A-43	
Principle of operation	BTL control arm	
Material	Aluminum anodized	
Mounting	Through-hole 3.7 mm (2x)	
Productview	Page 534	

	BAM010Y BTL6-A-MF01-A-50	**BAM0110** BTL6-A-MF03-K-50	**BAM01N3** BTL6-A-MF07-A-PF/M5
	BTL control arm	BTL control arm	BTL control arm
	Aluminum anodized	PA anodized	Aluminum anodized
	Through-hole 5.5 mm (2x)	Through-hole 5.5 mm (2x)	2x cylinder head screw ISO 4762 M5x25
	Page 534	Page 534	Page 535

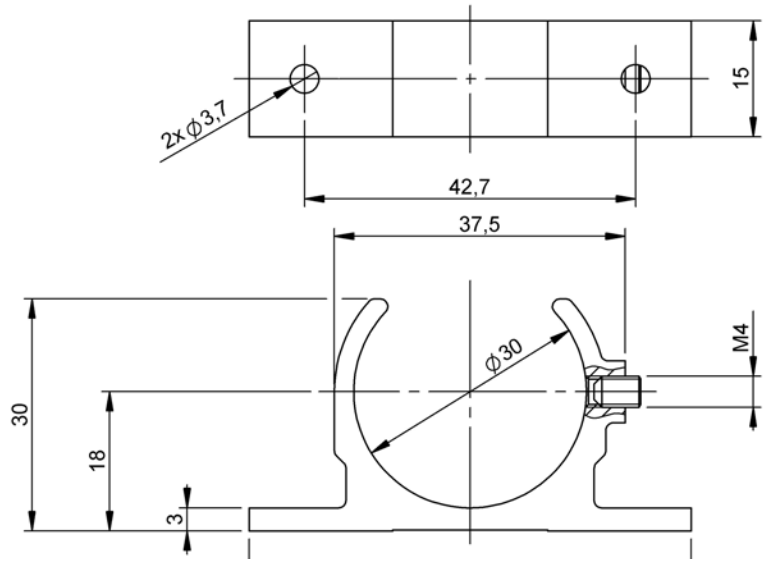

BAM010W

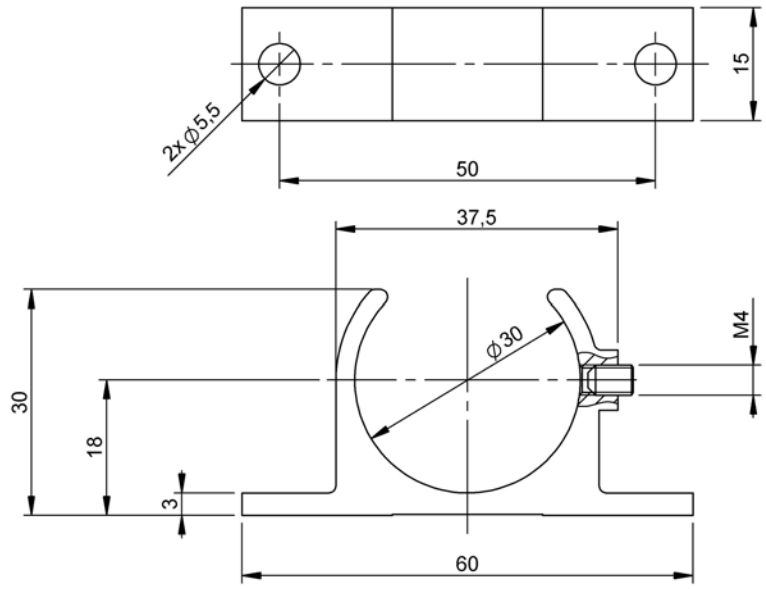

BAM010Y

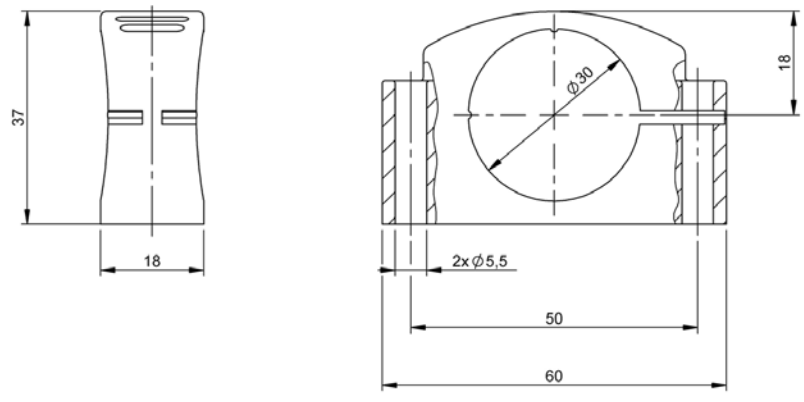

BAM0110

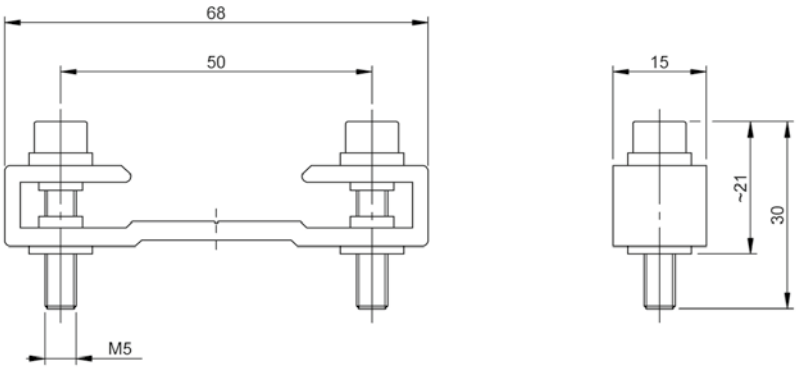

BAM01N3

	BAM009K BES 08-DM-1	BAM01WF BAM MC-XA-021-M5-4	BAM01WR BAM MC-XA-021-M8-3	
Principle of operation	Sealing element	General installation accessories	General installation accessories	
Use	For sealing of pressure rated sensors M8	For M05 sensors	For M08 sensors	
Material	PA phosphated	Stainless steel	Galvanized steel	
Ambient temperature	-40...110 °C	—	—	
Productview	Page 538	Page 538	Page 538	

	BAM01WJ BAM MC-XA-021-M18-4	BAM01WL BAM MC-XA-021-M18-A	BAM01W5 BAM MC-XA-021-M30-2	
Principle of operation	General installation accessories	General installation accessories	General installation accessories	
Use	For M18 sensors	For M18 sensors	For M30 sensors	
Material	Stainless steel	PA	Brass nickel plated	
Ambient temperature	—	-30...85 °C	—	
Productview	Page 538	Page 538	Page 538	

	BAM033A BAM MC-XA-021-M8-4-01	BAM01W3 BAM MC-XA-021-M12-2	BAM01WH BAM MC-XA-021-M12-4	BAM01W6 BAM MC-XA-021-M16-2	BAM01W4 BAM MC-XA-021-M18-2
	General installation accessories	General installation accessories	General installation accessories	General installation accessories	General installation accessories
	For M08 sensors	For M12 sensors	For M12 sensors	For M16 sensors	For M18 sensors
	Steel	Brass nickel plated	Stainless steel	Galvanized brass	Brass nickel plated
	—	—	—	—	—
	Page 538	Page 538	Page 538	Page 538	Page 538

	BAM01WK BAM MC-XA-021-M30-4	BAM01WM BAM MC-XA-021-M30-A			
	General installation accessories	General installation accessories			
	For M30 sensors	For M30 sensors			
	Stainless steel	PA			
	—	-30...85 °C			
	Page 538	Page 539			

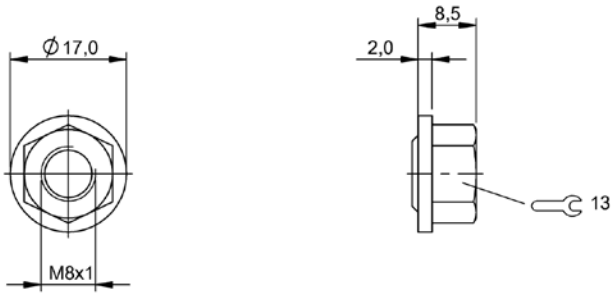

BAM009K

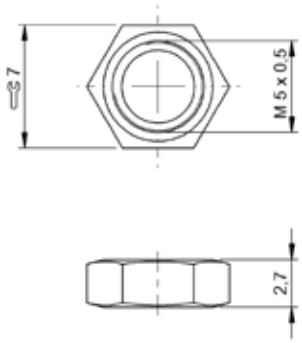

BAM01WF

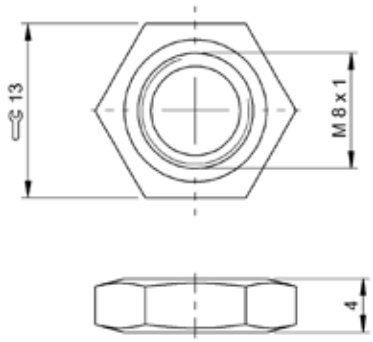

BAM01WR, BAM033A

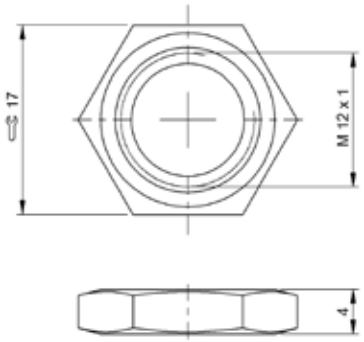

BAM01W3, BAM01WH

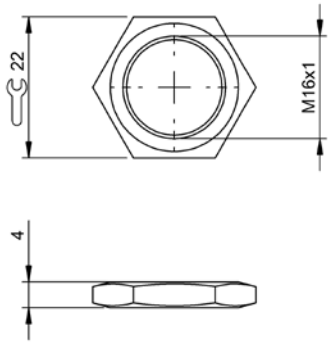

BAM01W6

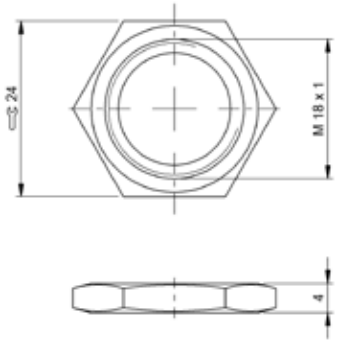

BAM01W4, BAM01WJ

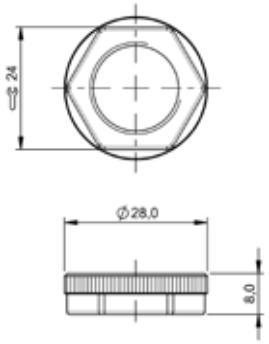

BAM01WL

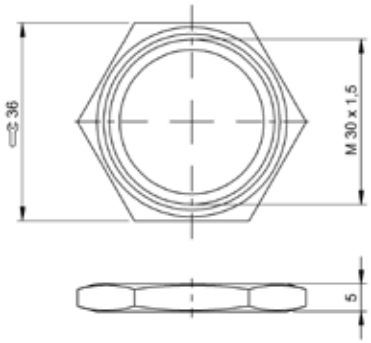

BAM01W5, BAM01WK

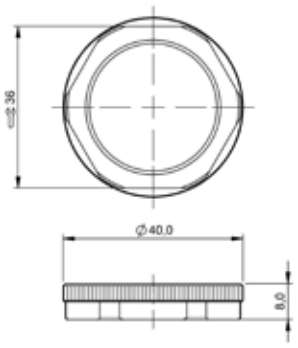

BAM01WM

Do you need more details? Our Product Finder at www.balluff.com provides you with product-specific information, including technical drawings, data sheets, user guides and more for each individual product. All items are available for download.

MECHANICAL ACCESSORIES

With simple assembly and installation, our great selection of high-quality accessories supports you in optimally embedding sensors in machines and systems. The wide Balluff product range offers the optimum gear for nearly every application.

BALLUFF
BALLUFF

	BAE00E5 BAE PD-US-004-S04	BAE00E6 BAE PD-US-004-S92	
Principle of operation	Teach adapter	Teach adapter	
Use	for ultrasonic sensors BUS	for ultrasonic sensors BUS	
Teach function	Pin3 to Pin2	Pin3 to Pin5	
Connection 1	M12x1-Female, 5-pole	M12x1-Female, 5-pole	
Connection 2	M12x1-Male, 5-pole	M12x1-Male, 5-pole	
Dimension	12 x 30 x 300 mm	12 x 30 x 300 mm	
Material	PA	PA	
Ambient temperature	-25...80 °C	-25...80 °C	
Protection degree	IP67	IP67	
Approval/Conformity	CE	CE	
Productview	Page 544	Page 544	

	BAM00ZL BAM TO-CC-001-M3-0,4/8,0	BAM033L BAM TO-CC-001-M4-0,6/12,0/18,0	
Principle of operation	Torque handle	Torque handle	
Use	for M8 connector	BNI M12	
Material	Stainless steel	Stainless steel	
Productview	Page 544	Page 544	

BAE00MR BAE PD-US-007-S92
Teach adapter
for ultrasonic sensors BUS
Pin1 to Pin5
M12x1-Female, 5-pole
M12x1-Male, 5-pole
12 x 30 x 300 mm
PA
-25...80 °C
IP67
CE
Page 544

BAM000E BFO CT
Cutter template
for photoelectric fiber optics BFO
—
—
—
21 x 8 x 53 mm
Plastic
—
—
—
Page 544

BAM02RY BAM TO-XA-013-01
Tool set
for installation
—
—
—
10 x 15 x 55 mm
Plastic
—
—
—
Page 544

BAM00ZN BAM TO-CC-001-A3-1,5/24,0
Torque handle
for connectors 7/8“
—
—
—
—
Stainless steel
—
—
—
Page 544

BAM0291 BAM TO-XA-009-A-0,7-2,0
Hex key set
for installation
Stainless steel Plastic
Page 544

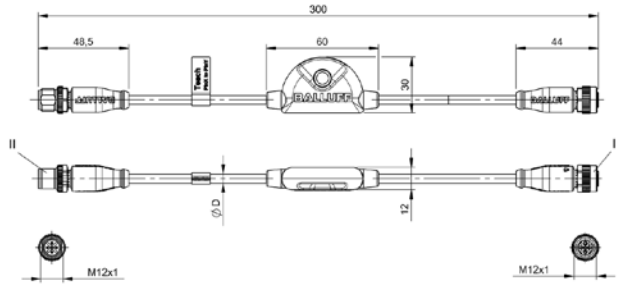

BAE00E5, BAE00E6, BAE00MR

BAM000E

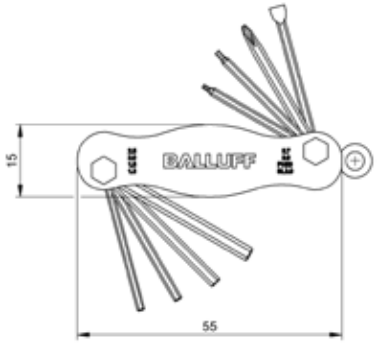

BAM02RY

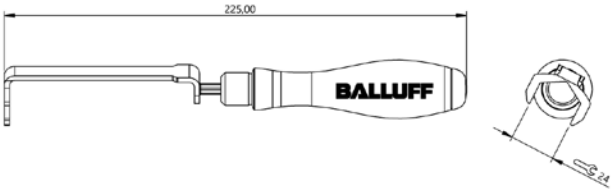

BAM00ZN

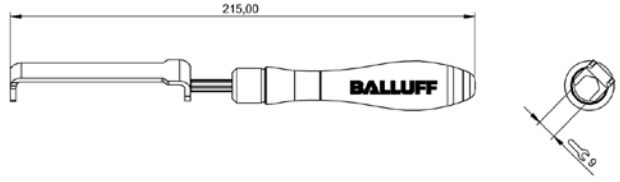

BAM00ZL

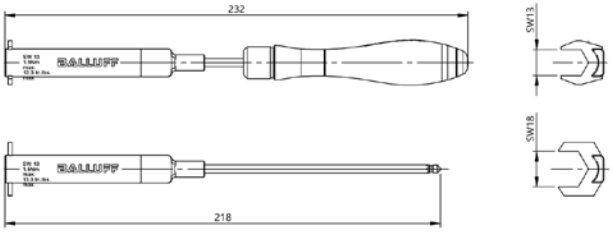

BAM033L

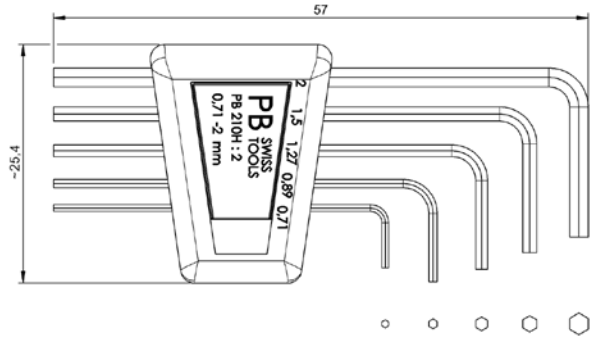

BAM0291

	BAM014M BTL5-P-3800-2	BAM014P BTL5-P-4500-1	
Principle of operation	BTL magnets, profile style	BTL magnets, profile style	
Version	floating	floating	
Material	POM	POM	
Dimension	37.6 x 14 x 20 mm	45 x 40 x 28 mm	
Distance min. to BTL	0.1 mm	0.1 mm	
Distance max. to BTL	4 mm	2 mm	
Ambient temperature	-40...85 °C	-40...60 °C	
Productview	Page 548	Page 548	

	BAM014K BTL5-M-2814-1S	BAM014L BTL5-N-2814-1S	
Principle of operation	BTL magnets, profile style	BTL magnets, profile style	
Version	captive	captive	
Material	Aluminum Iglidur J	Aluminum Iglidur J	
Dimension	28 x 20.5 x 41 mm	28 x 23 x 41 mm	
Distance min. to BTL	—	—	
Distance max. to BTL	—	—	
Ambient temperature	-40...85 °C	-40...85 °C	
Productview	Page 548	Page 548	

	BAM014T BTL5-P-5500-2	BAM014W BTL6-A-3800-2	BAM014Z BTL6-A-3801-2	BAM014H BTL5-F-2814-1S
	BTL magnets, profile style	BTL magnets, profile style	BTL magnets, profile style	BTL magnets, profile style
	floating	floating	floating	captive
	POM	POM	POM	Iglidur J
	55 x 20 x 21 mm	37.6 x 29 x 21 mm	37.6 x 18.3 x 21 mm	28 x 29.9 x 40 mm
	5.0 mm	4.0 mm	4.0 mm	—
	15 mm	8 mm	8 mm	—
	-40...85 °C	-40...85 °C	-40...85 °C	-40...85 °C
	Page 548	Page 548	Page 548	Page 548

	BAM01FC BTL5-T-2814-1S			
	BTL magnets, profile style			
	captive			
	Iglidur J			
	28 x 16.5 x 40 mm			
	—			
	—			
	-40...85 °C			
	Page 549			

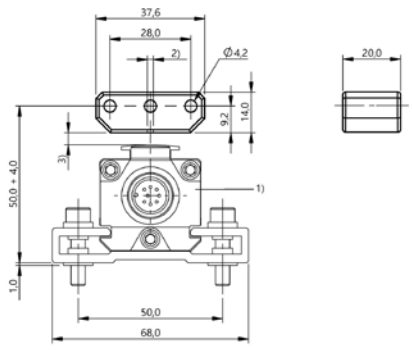

1) not included in scope of delivery, 2) Lateral offset, 3) Distance to BTL

BAM014M

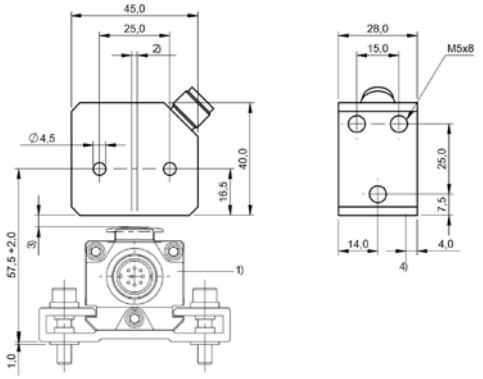

1) not included in scope of delivery, 2) Lateral offset, 3) Distance to BTL, 4)Null point offset for measuring range

BAM014P

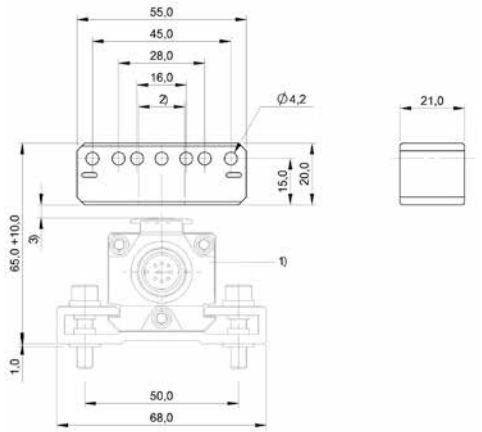

1) not included in scope of delivery, 2) Lateral offset, 3) Distance to BTL

BAM014T

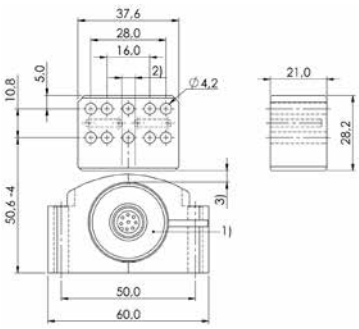

1) not included in scope of delivery, 2) Lateral offset, 3) Distance to BTL

BAM014W

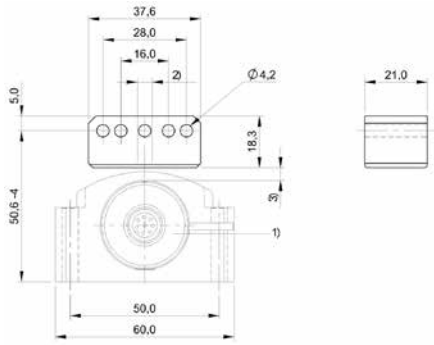

1) not included in scope of delivery, 2) Lateral offset, 3) Distance to BTL

BAM014Z

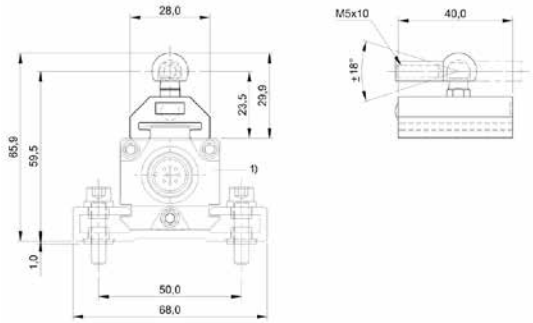

1) not included in scope of delivery

BAM014H

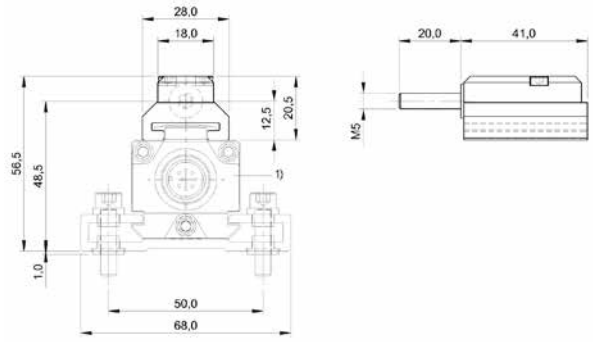

1) not included in scope of delivery

BAM014K

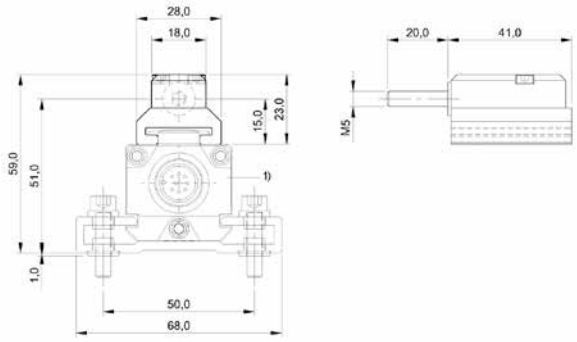

1) not included in scope of delivery

BAM014L

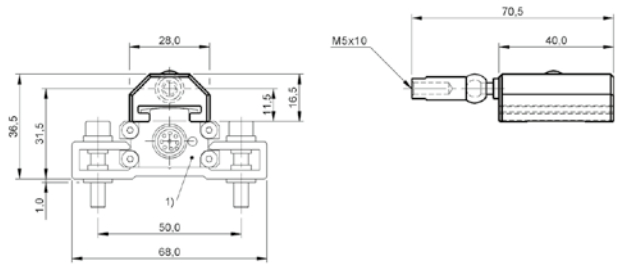

1) not included in scope of delivery

BAM01FC

	BAM01A2 BTL-S-3112-4Z	BAM01KA BTL-S-3112-4Z-SA10	
Principle of operation	BTL magnet, float	BTL magnet, float	
Version	—	—	
Material	Stainless steel (1.4404)	Stainless steel (1.4404)	
Dimension	Ø 31 x 69 mm	Ø 31 x 69 mm	
Inside diameter	11.7 mm	11.7 mm	
Ambient temperature	-20...130 °C	-20...130 °C	
Productview	Page 554	Page 554	

	BAM0147 BTL2-S-4414-4Z-EX	BAM0148 BTL2-S-4414-4Z01-EX	
Principle of operation	BTL magnet, float	BTL magnet, float	
Version	Ex	Ex	
Material	Stainless steel (1.4404)	Stainless steel (1.4404)	
Dimension	Ø 44 x 49 mm	Ø 44 x 49 mm	
Inside diameter	13.0 mm	13.0 mm	
Ambient temperature	-20...120 °C	-20...120 °C	
Productview	Page 554	Page 554	

BAM024J BTL2-S-3212-4Z
BTL magnet, float
—
Stainless steel (1.4404)
Ø 32 x 53 mm
11.7 mm
-20...120 °C
Page 554

BAM0146 BTL2-S-4414-4Z
BTL magnet, float
—
Stainless steel (1.4404)
Ø 44 x 49 mm
13.0 mm
-20...120 °C
Page 554

BAM0149 BTL2-S-5113-4K
BTL magnet, float
—
Stainless steel (1.4404)
Ø 50.9 x 52 mm
13.0 mm
-20...120 °C
Page 554

BAM014C BTL2-S-6216-8P
BTL magnet, float
—
Stainless steel (1.4541)
Ø 62 x 80 mm
16.0 mm
-20...120 °C
Page 554

BAM014A BTL2-S-5113-4K-EX
BTL magnet, float
Ex
Stainless steel (1.4404)
Ø 50.9 x 52 mm
13.0 mm
-20...120 °C
Page 555

BAM014E BTL2-S-6216-8P-EX
BTL magnet, float
Ex
Stainless steel (1.4541)
Ø 62 x 80 mm
16.0 mm
-20...120 °C
Page 555

BAM013H BTL-P-0814-GR-PAF
BTL magnet, rod
—
PA 6
Ø 17.2 x 5 mm
14.0 mm
-40...60 °C
Page 555

BAM013J BTL-P-1012-4R
BTL magnet, rod
—
Aluminum
Ø 25 x 8 mm
12.0 mm
-40...100 °C
Page 555

	BAM013K BTL-P-1012-4R-PA	BAM013L BTL-P-1013-4R	
Principle of operation	BTL magnet, rod	BTL magnet, rod	
Version	—	—	
Material	PA	Aluminum	
Dimension	Ø 25 x 8 mm	Ø 32 x 8 mm	
Inside diameter	12.0 mm	13.0 mm	
Ambient temperature	-40...100 °C	-40...100 °C	
Productview	Page 555	Page 555	

	BAM013M BTL-P-1013-4R-PA	BAM013P BTL-P-1013-4S	BAM013R BTL-P-1014-2R	BAM013Y BTL-P-1028-15R
	BTL magnet, rod	BTL magnet, rod	BTL magnet, rod	BTL magnet, rod
	—	—	—	—
	PA	Aluminum	Aluminum	Aluminum
	Ø 32 x 8 mm	Ø 32 x 8 mm	Ø 21.9 x 8 mm	Ø 65 x 8 mm
	13.0 mm	13.0 mm	13.5 mm	28.0 mm
	-40...100 °C	-40...100 °C	-40...100 °C	-40...85 °C
	Page 555	Page 555	Page 555	Page 555

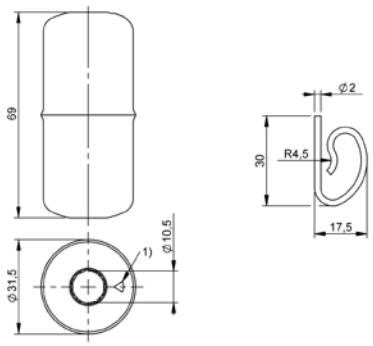

1) Designation for upper side

BAM01A2

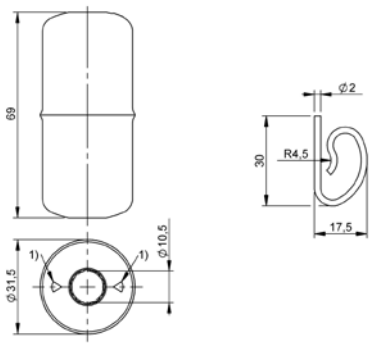

1) Designation for upper side

BAM01KA

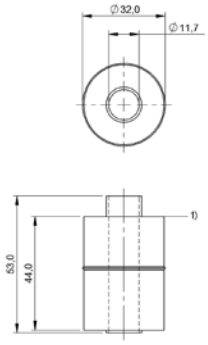

1) Reference point

BAM024J

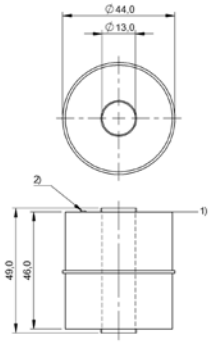

1) Reference point, 2) Designation for upper side

BAM0146

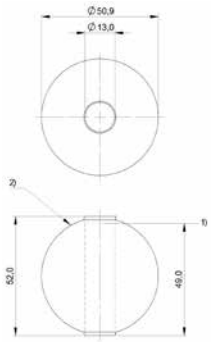

1) Reference point, 2) Designation for upper side

BAM0149

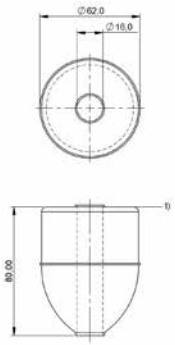

1) Reference point

BAM014C

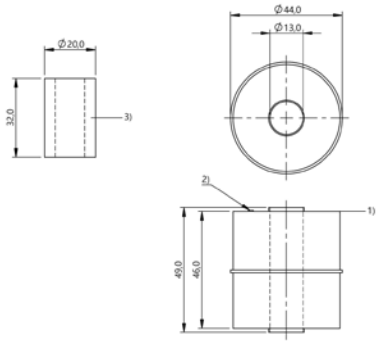

1) Reference point, 2) Designation for upper side, 3) Spacer

BAM0147

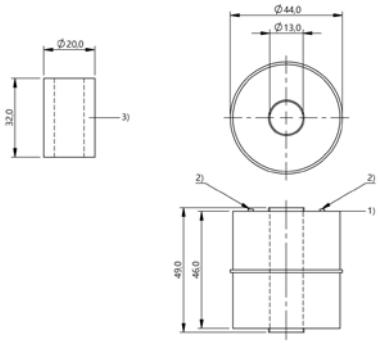

1) Reference point, 2) Designation for upper side, 3) Spacer

BAM0148

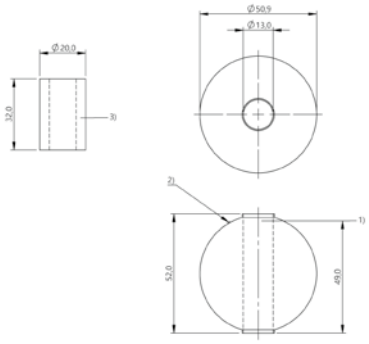

1) Reference point, 2) Designation for upper side, 3) Spacer

BAM014A

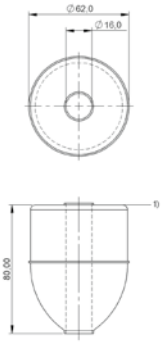

1) Reference point

BAM014E

BAM013H

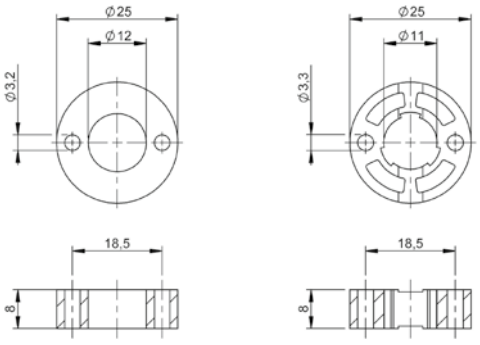

BAM013J, BAM013K

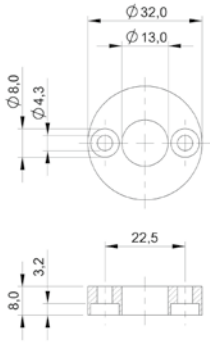

BAM013L, BAM013M

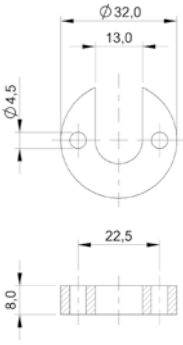

BAM013P

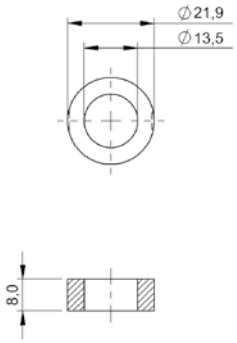

BAM013R

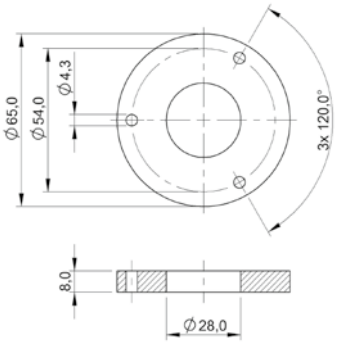

BAM013Y

	BAM032U BAM IA-MS-030-A5	BAM01JT BAM IA-XA-003-4x5-Y	
Principle of operation	—	—	
Version	Info pouch A5, magnetic	Label plates	
Use	For label holder	For the marking of network module	
Material	PET	ABS (white)	
Dimension	3 x 225 x 163 mm	133 x 1 x 83 mm	
Mounting	magnetic	Clamps	
Ambient temperature	-30...120 °C	—	
Productview	Page 558	Page 558	

Page 558

	BAM01HJ BAM AP-US-002-M18-0	BAM0270 BAM TG-ID-016-A01	
Principle of operation	—	Actuator	
Version	Focusing attachment	Actuator	
Use	For ultrasonic sensors BUS	For locking fixture BID	
Material	POM	Stainless steel	
Dimension	Ø 25 x 80 mm	17 x 32 x 48 mm	
Mounting	Thread M18x1	Screw M5	
Ambient temperature	—	—	
Productview	Page 558	Page 558	

	BAM032W BAM IA-XA-023-01	BAE00EF BTL7-A-CB02-K	BAE00E1 BTL7-A-CB02-S115	BAE00EC BTL7-A-CB02-S32
	—	Calibration box	Calibration box	Calibration box
	Label plates	—	—	—
	For signaling and display units	For magnetostrictive sensors BTL	For magnetostrictive sensors BTL	For magnetostrictive sensors BTL
	Anodized aluminum Die-cast zinc Galvanized steel PP	ABS	ABS	ABS
	41 x 300 x 187 mm	61 x 25 x 732 mm	61 x 25 x 732 mm	61 x 25 x 732 mm
	Clamps, Screw M5	—	—	—
	—	0...50 °C	0...50 °C	0...50 °C
	Page 558	Page 558	Page 558	Page 542

	BAM0271 BAM TG-ID-016-H01	BAM0272 BAM TG-ID-016-H02		
	Actuator	Actuator		
	Actuator	Actuator		
	For locking fixture BID	For locking fixture BID		
	Aluminum	Aluminum		
	145 x 72 x 113 mm	145 x 94 x 113 mm		
	Screw M5	Screw M5		
	—	—		
	Page 559	Page 559		

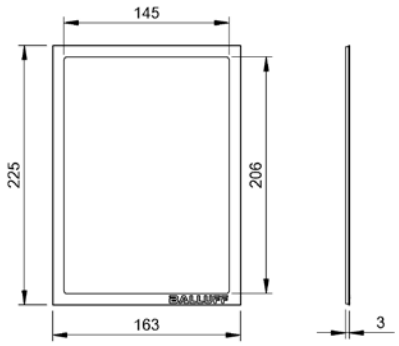

BAM032U

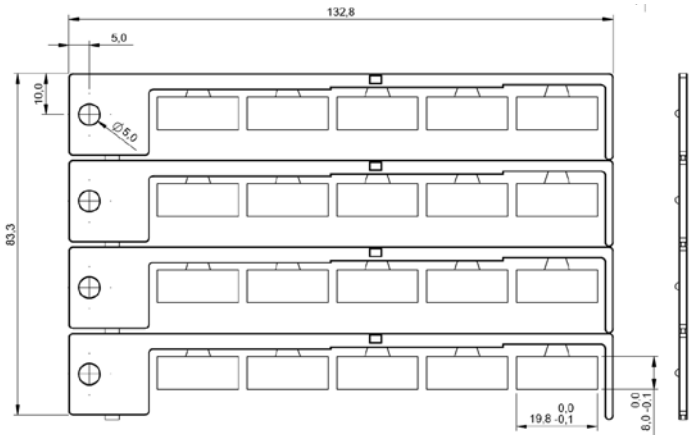

BAM01JT

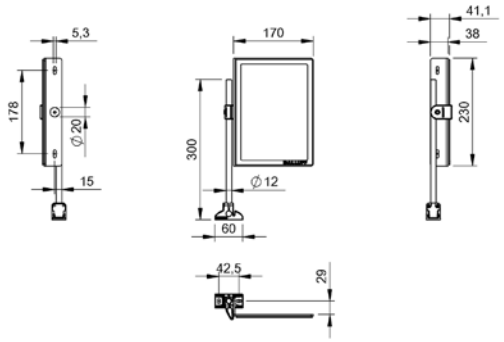

BAM032W

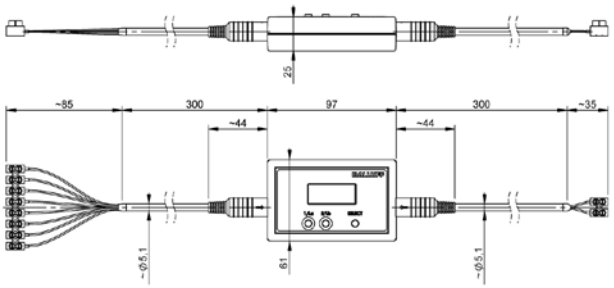

BAE00EF

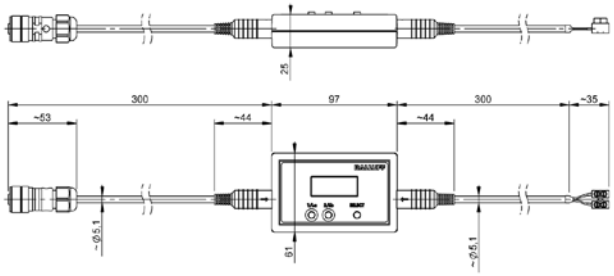

BAE00E1

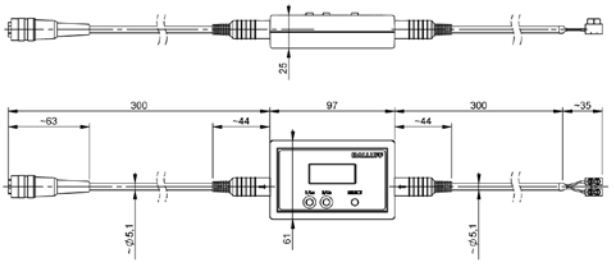

BAE00EC

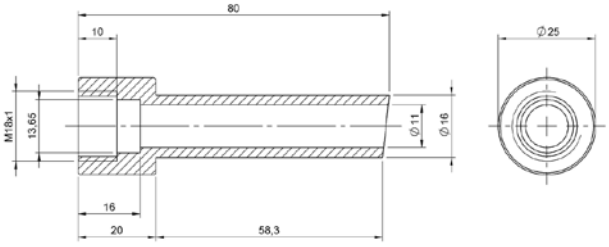

BAM01HJ

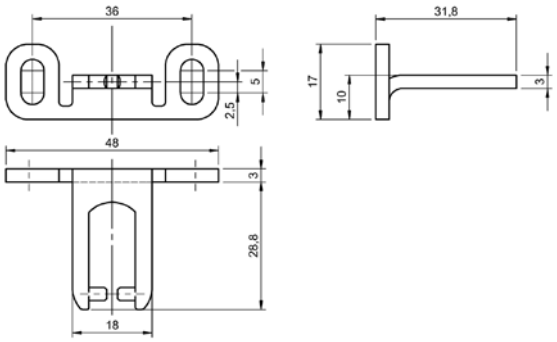

BAM0270

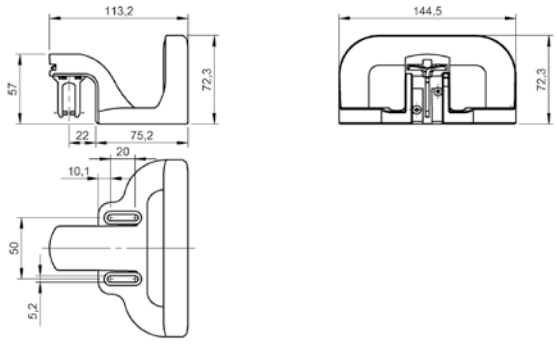

BAM0271

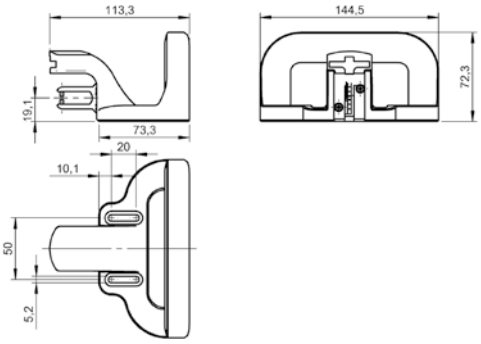

BAM0272

Optimum lighting conditions for your application

LIGHTING FOR VISION SYSTEMS AND MACHINES

Balluff offers a wide range of rugged lights for your various installation spaces and tasks: for optimal lighting conditions in image processing and for machine lighting.

The energy-saving and long-lasting LED technology impresses with its homogeneous optical properties. Moreover, Balluff lighting options guarantee eye safety in accordance with IEC 62471. You can select between red light, white light, infrared light or laser variants.

The most important benefits

- Highest quality (extensive EMC tests, high protection class)
- Easy and fast assembly
- Simple startup
- Rugged, long service life

	BAE00AM BAE LX-VS-DR090
Connection	Cable with connector, M12x1 connector, 4-pin, 0.30 m
Version	Dark field light
Dimension	130 x 9.5 x 155 mm
Rated operating voltage Ue DC	24 V
Current draw max.	416 mA
Operating mode	Normal
Material	Aluminum anodized, black PMMA
Illumination area	Ø 90 mm
Light type	LED, red light
Wave length	617 nm
Illuminence (0.1 m)	2250 Lux
Ambient temperature	-10...55 °C
Approval/Conformity	CE, EAC
Protection degree	IP40

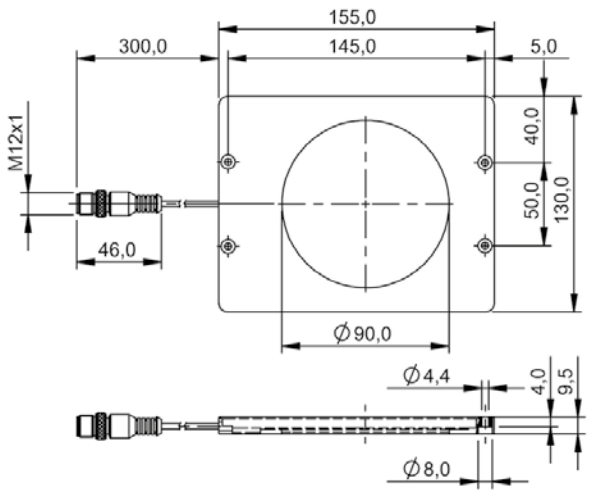

BAE00AM

	BAE00KR BAE LX-VS-HI050	BAE00FR BAE LX-VS-HI100	
Connection	Cable with connector, M12x1 connector, 4-pin, 0.30 m	Cable with connector, M12x1 connector, 4-pin, 0.30 m	
Version	Background light	Background light	
Dimension	80 x 9.5 x 105 mm	130 x 12 x 155 mm	
Rated operating voltage Ue DC	24 V	24 V	
Current draw max.	375 mA	500 mA	
Operating mode	Normal	Normal	
Digital inputs	Trigger	Trigger	
Material	Aluminum anodized, black Glass PMMA	Aluminum anodized, black Glass PMMA	
Illumination area	50 x 50 mm	100 x 100 mm	
Light type	LED infrared	LED infrared	
Wave length	875 nm	875 nm	
Illuminence (0.1 m)	—	—	
Beam angle	35 ° x 35 °	55° x 55°	
Ambient temperature	-10...55 °C	-10...55 °C	
Approval/Conformity	CE, EAC	CE, EAC	
Protection degree	IP54	IP54	
Productview	Page 568	Page 568	

	BAE00KP BAE LX-VS-HI150	BAE00JE BAE LX-VS-HI200	BAE00WM BAE LX-VS-HI300	BAE000E BAE LX-VS-HR025
	Cable with connector, M12x1 connector, 4-pin, 0.30 m	Cable with connector, M12x1 connector, 4-pin, 0.30 m	Cable with connector, M12x1 connector, 4-pin, 0.30 m	Cable with connector, M12x1 connector, 4-pin, 0.30 m
	Background light	Background light	Background light	Background light
	130 x 9.5 x 205 mm	180 x 9.5 x 255 mm	255 x 9.5 x 330 mm	43 x 9.5 x 64.5 mm
	24 V	24 V	24 V	24 V
	830 mA	708 mA	1500 mA	208 mA
	Normal	Normal	Normal	Normal
	Trigger	Trigger	Trigger	–
	Aluminum anodized, black Glass PMMA	Aluminum anodized, black Glass PMMA	Aluminum anodized, black Glass PMMA	Aluminum anodized, black Glass PMMA
	150 x 100 mm	200 x 150 mm	300 x 200 mm	25 x 25 mm
	LED infrared	LED infrared	LED infrared	LED, red light
	875 nm	875 nm	875 nm	617 nm
	–	–	–	350 Lux
	80 ° x 60 °	100 ° x 80 °	–	40 ° x 40 °
	-10...55 °C	-10...55 °C	-10...55 °C	-10...55 °C
	CE, EAC	CE, EAC	CE, EAC	CE, EAC
	IP54	IP54	IP54	IP54
	Page 569	Page 569	Page 570	Page 570

	BAE000F BAE LX-VS-HR050	BAE000H BAE LX-VS-HR100	
Connection	Cable with connector, M12x1 connector, 4-pin, 0.30 m	Cable with connector, M12x1 connector, 4-pin, 0.30 m	
Version	Background light	Background light	
Dimension	80 x 9.5 x 105 mm	130 x 12 x 155 mm	
Rated operating voltage Ue DC	24 V	24 V	
Current draw max.	250 mA	416 mA	
Operating mode	Normal	Normal	
Digital inputs	Trigger	Trigger	
Material	Aluminum anodized, black Glass PMMA	Aluminum anodized, black Glass PMMA	
Illumination area	50 x 50 mm	100 x 100 mm	
Light type	LED, red light	LED, red light	
Wave length	617 nm	617 nm	
Illuminence (0.1 m)	1250 Lux	3700 Lux	
Beam angle	42 ° x 42 °	55° x 55°	
Ambient temperature	-10...55 °C	-10...55 °C	
Approval/Conformity	CE, EAC	CE, EAC	
Protection degree	IP54	IP54	
Productview	Page 568	Page 568	

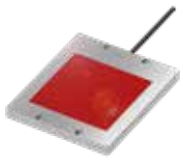

	BAE00JF BAE LX-VS-HR100-E	BAE00C5 BAE LX-VS-HR150	BAE00JC BAE LX-VS-HR200	BAE00MU BAE LX-VS-HR300
	Cable with connector, M12x1 connector, 4-pin	Cable with connector, M12x1 connector, 4-pin, 0.30 m	Cable with connector, M12x1 connector, 4-pin, 0.30 m	Cable with connector, M12x1 connector, 4-pin, 0.30 m
	Background light	Background light	Background light	Background light
	130 x 12 x 155 mm	130 x 9.5 x 205 mm	180 x 9.5 x 255 mm	255 x 9.5 x 330 mm
	24 V	24 V	24 V	24 V
	416 mA	500 mA	625 mA	1000 mA
	Normal	Normal	Normal	Normal
	Trigger	Trigger	Trigger	Trigger
	Stainless steel (1.4301) Glass PMMA	Aluminum anodized, black Glass PMMA	Aluminum anodized, black Glass PMMA	Aluminum anodized, black Glass PMMA
	100 x 100 mm	150 x 100 mm	200 x 150 mm	300 x 200 mm
	LED, red light	LED, red light	LED, red light	LED, red light
	617 nm	617 nm	617 nm	617 nm
	3700 Lux	4800 Lux	5100 Lux	4750 Lux
	55° x 55°	80 ° x 60 °	100 ° x 80 °	—
	-10...55 °C	-10...55 °C	-10...55 °C	-10...55 °C
	CE, EAC	CE, EAC	CE, EAC	CE, EAC
	IP69K	IP54	IP54	IP54
	Page 568	Page 569	Page 569	Page 570

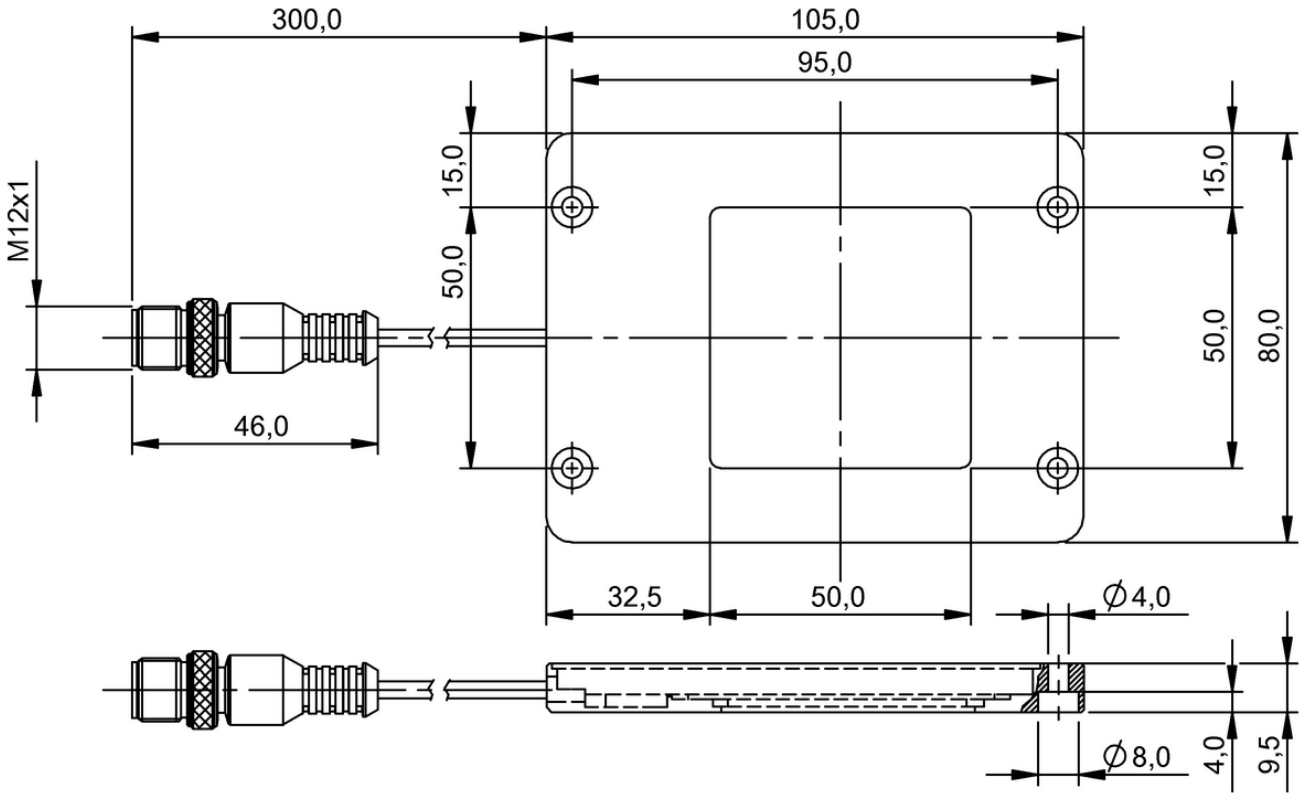

BAE00KR, BAE000F

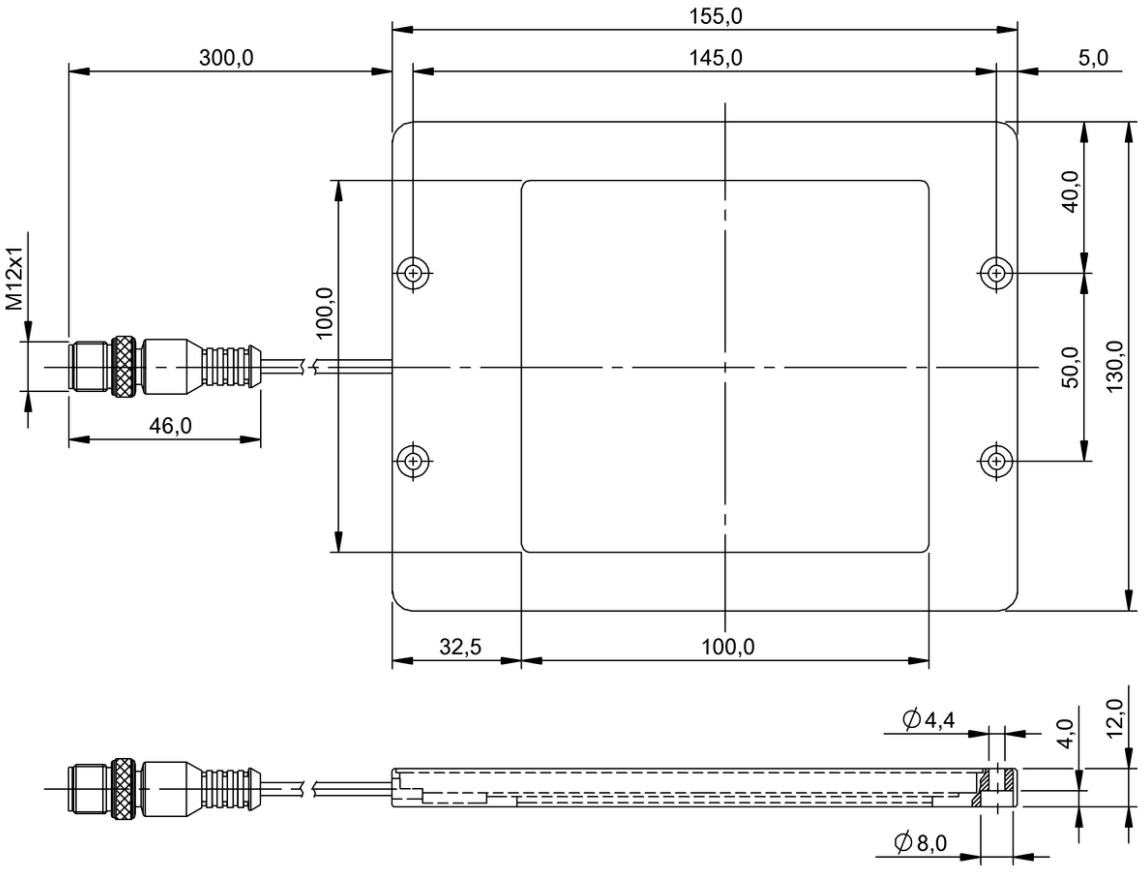

BAE00FR, BAE000H, BAE00JF

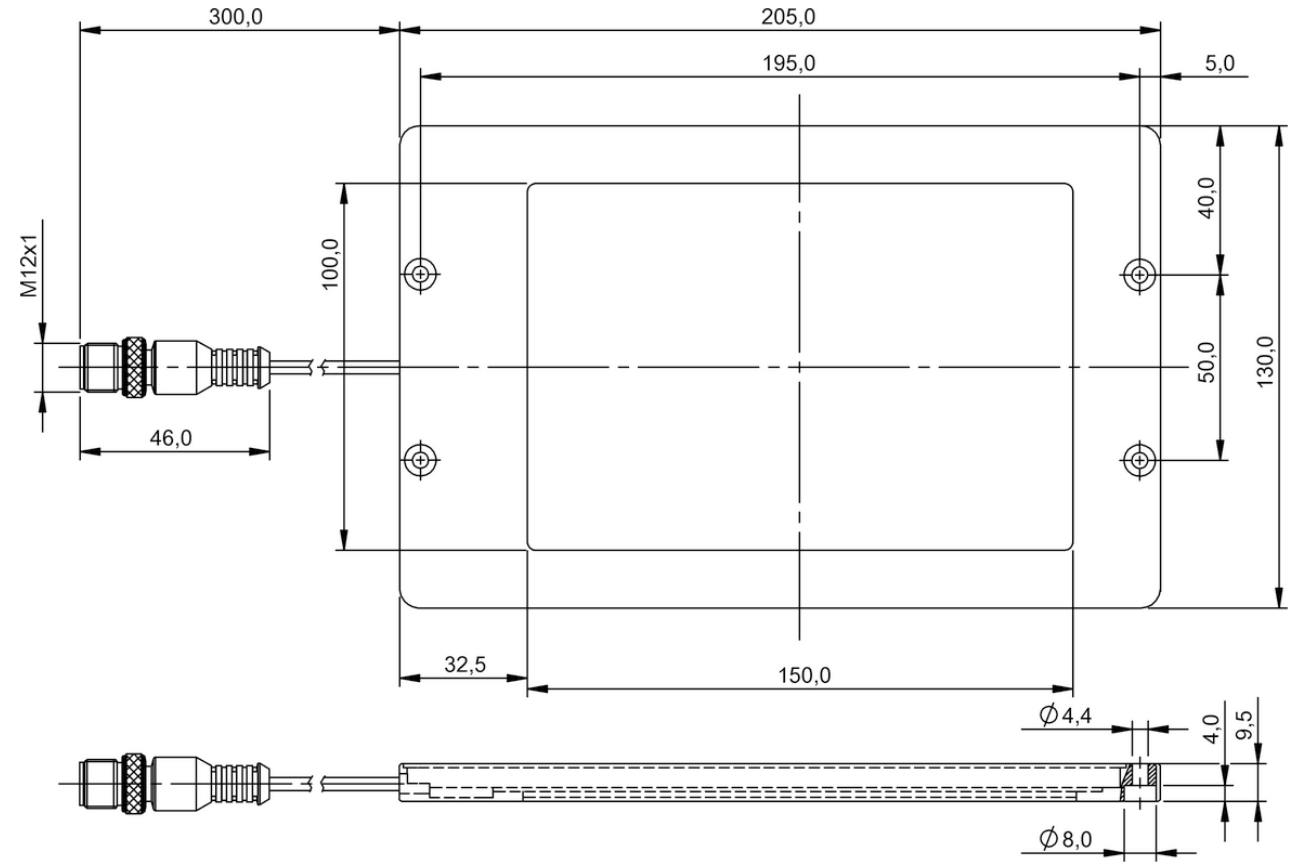

BAE00KP, BAE00C5

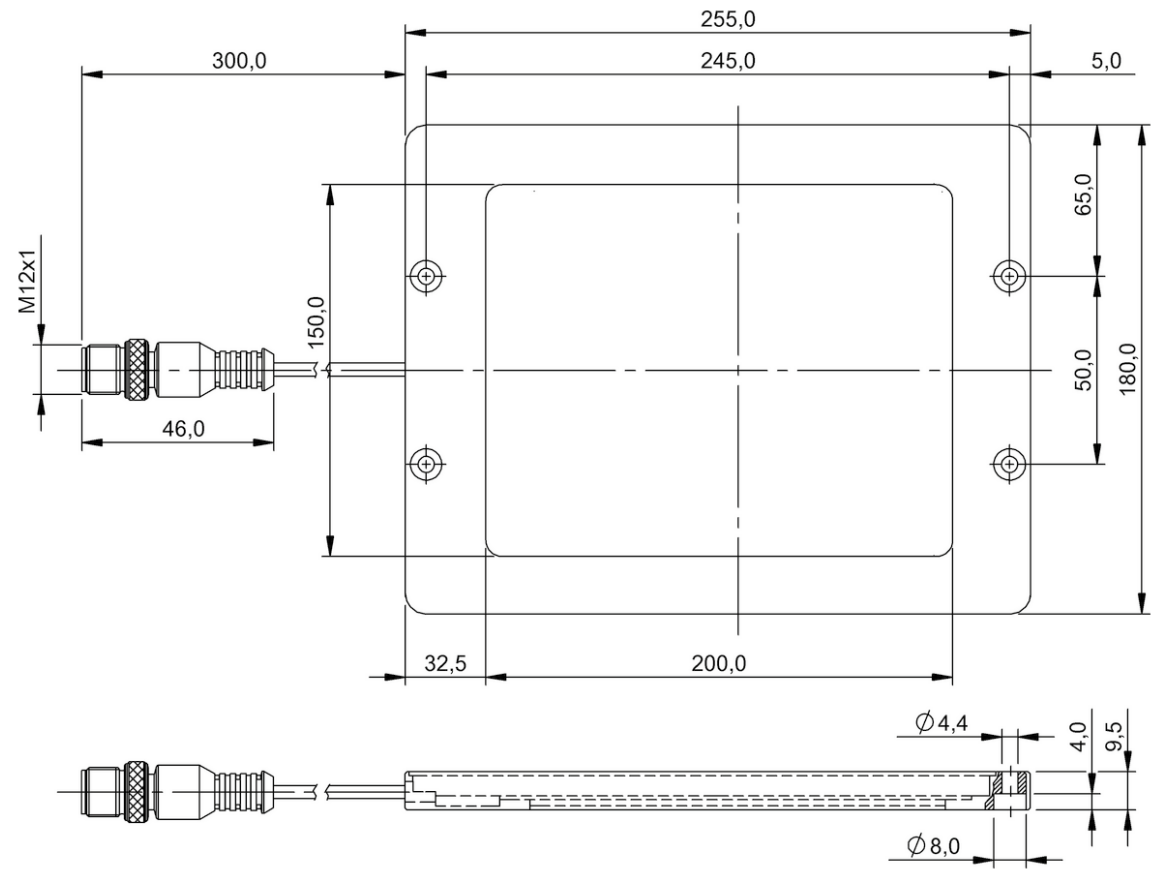

BAE00JE, BAE00JC

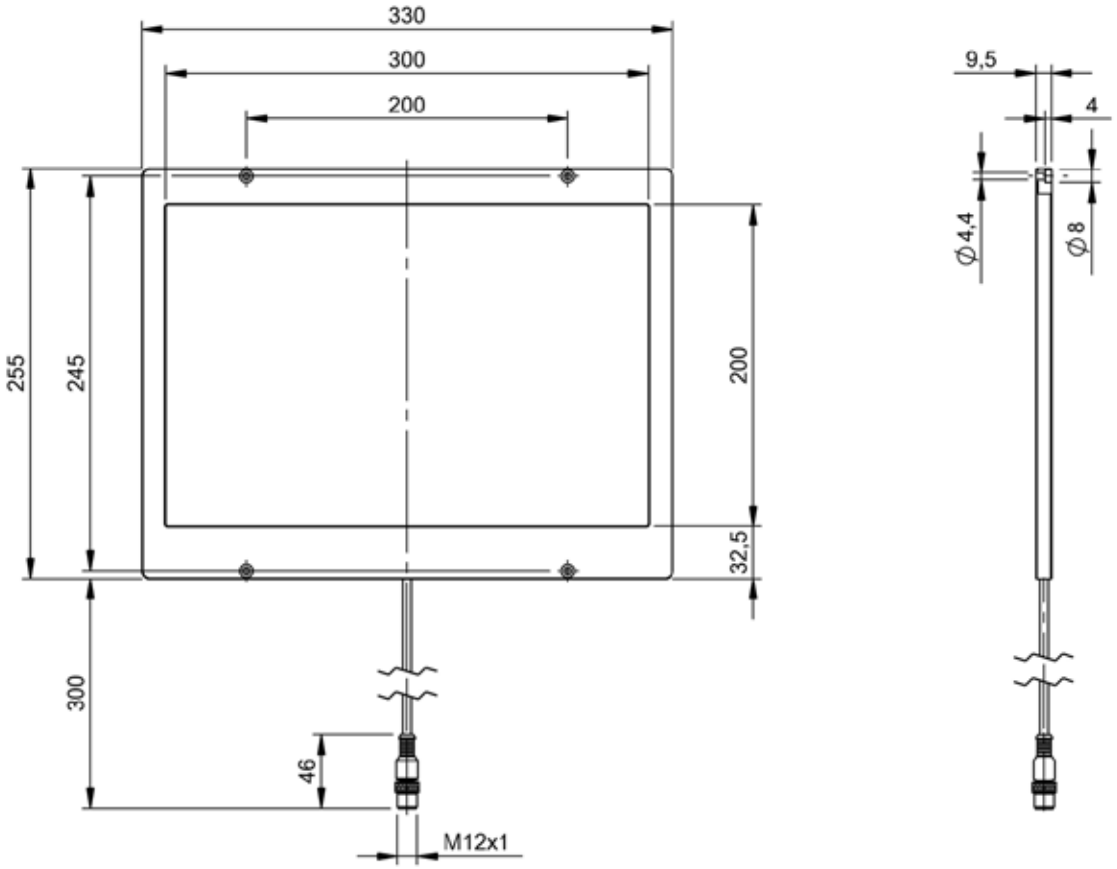

BAE00WM, BAE00MU

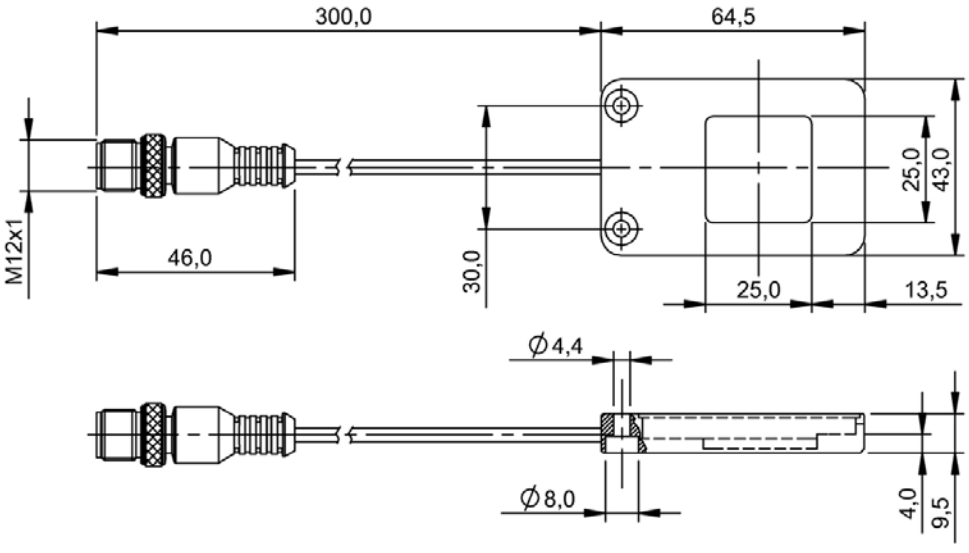

BAE000E

	BAE000K BAE LX-VS-RI100	
Connection	Cable with connector, M12x1 connector, 4-pin, 0.30 m	
Version	Ring light	
Dimension	Ø 116 x 20.5 mm	
Rated operating voltage Ue DC	24 V	
Current draw max.	750 mA, 1370 mA (Boost mode)	
Operating mode	Normal, Boost	
Material	Aluminum anodized, black Glass	
Illumination area	Ø 100 mm/Ø 60 mm	
Light type	LED infrared	
Wave length	875 nm	
Illuminence (0.1 m)	—	
Beam angle	30 °	
Ambient temperature	-10...55 °C	
Approval/Conformity	CE, EAC	
Protection degree	IP54	
Productview	Page 574	

	BAE000J BAE LX-VS-RR100	BAE00AN BAE LX-VS-RW100
	Cable with connector, M12x1 connector, 4-pin, 0.30 m	Cable with connector, M12x1 connector, 4-pin, 0.30 m
	Ring light	Ring light
	Ø 116 x 20.5 mm	Ø 116 x 20.5 mm
	24 V	24 V
	830 mA, 1370 mA (Boost mode)	410 mA, 830 mA (Boost mode)
	Normal, Boost	Normal, Boost
	Aluminum anodized, black Glass	Aluminum anodized, black Glass
	Ø 100 mm/Ø 60 mm	Ø 100 mm/Ø 60 mm
	LED, red light	LED white light
	617 nm	–
	19000 Lux 32500 Lux (Boost mode)	8500 Lux 16100 Lux (Boost mode)
	30 °	30 °
	-10...55 °C	-10...55 °C
	CE, EAC	CE, EAC
	IP54	IP54
	Page 574	Page 574

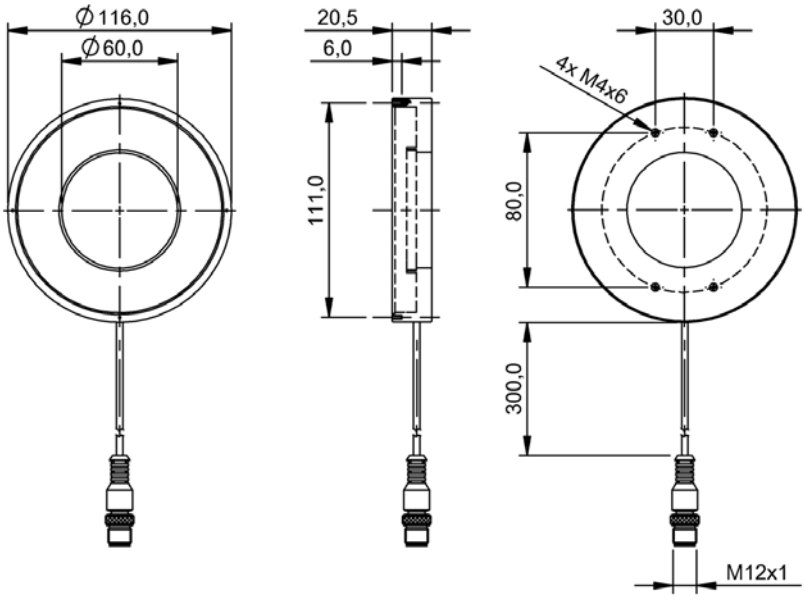

BAE000K, BAE000J, BAE00AN

	BAE00NU BAE LX-VS-LI100-S26	BAE00NZ BAE LX-VS-LI200-S26	
Connection	Connector, M5x0.5 plug, 4-pin, 0.30 m	Connector, M5x0.5 plug, 4-pin, 0.30 m	
Version	Strip light	Strip light	
Dimension	13 x 100 x 18 mm	13 x 200 x 18 mm	
Rated operating voltage Ue DC	24 V	24 V	
Current draw max.	170 mA, 375 mA (Boost mode)	290 mA, 710 mA (Boost mode)	
Operating mode	Normal, Boost	Normal, Boost	
Digital inputs	Trigger	Trigger	
Material	Aluminum anodized, black Glass	Aluminum anodized, black Glass	
Illumination area	95 x 10 mm	195 x 10 mm	
Light type	LED infrared	LED infrared	
Wave length	875 nm	875 nm	
Illuminence (0.1 m)	—	—	
Color temperature	—	—	
Beam angle	75 ° x 30 °	115 ° x 35 °	
Ambient temperature	-10...55 °C	-10...55 °C	
Approval/Conformity	CE, EAC	CE, EAC	
Protection degree	IP54	IP54	
Productview	Page 578	Page 578	

	BAE00NT BAE LX-VS-LR100-S26	BAE00NY BAE LX-VS-LR200-S26	BAE00NW BAE LX-VS-LW100-S26	BAE00P0 BAE LX-VS-LW200-S26
	Connector, M5x0.5 plug, 4-pin, 0.30 m	Connector, M5x0.5 plug, 4-pin, 0.30 m	Connector, M5x0.5 plug, 4-pin, 0.30 m	Connector, M5x0.5 plug, 4-pin, 0.30 m
	Strip light	Strip light	Strip light	Strip light
	13 x 100 x 18 mm	13 x 200 x 18 mm	13 x 100 x 18 mm	13 x 200 x 18 mm
	24 V	24 V	24 V	24 V
	170 mA, 375 mA (Boost mode)	290 mA, 710 mA (Boost mode)	125 mA, 250 mA (Boost mode)	170 mA, 450 mA (Boost mode)
	Normal, Boost	Normal, Boost	Normal, Boost	Normal, Boost
	Trigger	Trigger	Trigger	Trigger
	Aluminum anodized, black Glass	Aluminum anodized, black Glass	Aluminum anodized, black Glass	Aluminum anodized, black Glass
	95 x 10 mm	195 x 10 mm	95 x 10 mm	195 x 10 mm
	LED, red light	LED, red light	LED white light	LED white light
	617 nm	617 nm	—	—
	6400 Lux 13500 Lux (Boost mode)	7150 Lux 15100 Lux (Boost mode)	2800 Lux 6200 Lux (Boost mode)	3000 Lux 7850 Lux (Boost mode)
	—	—	5600 K	5600 K
	75 ° x 30 °	115 ° x 35 °	80 ° x 35 °	120 ° x 40 °
	-10...55 °C	-10...55 °C	-10...55 °C	-10...55 °C
	CE, EAC	CE, EAC	CE, EAC	CE, EAC
	IP54	IP54	IP54	IP54
	Page 578	Page 578	Page 578	Page 578

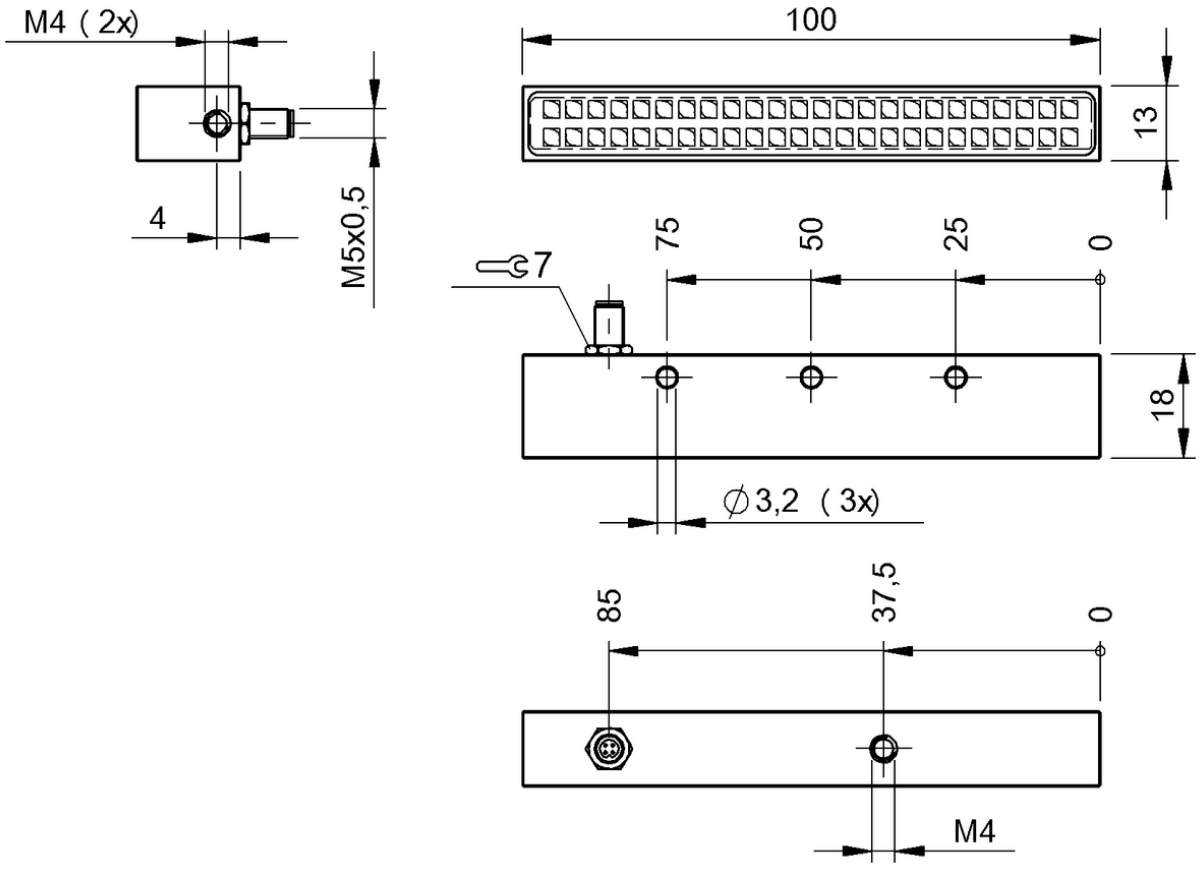

BAE00NU, BAE00NT, BAE00NW

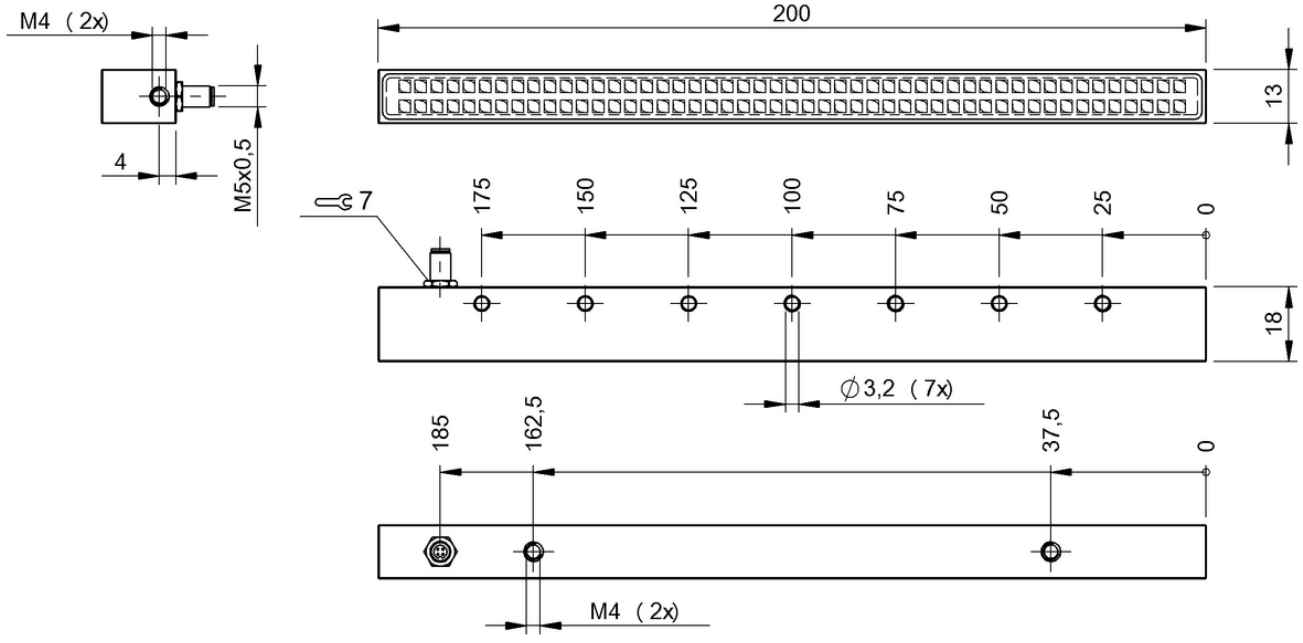

BAE00NZ, BAE00NY, BAE00P0

Connection	
Version	
Dimension	
Rated operating voltage Ue DC	
Current draw max.	
Operating mode	
Material	
Illumination area	
Light type	
Wave length	
Illuminence (0.1 m)	
Beam angle	
Ambient temperature	
Approval/Conformity	
Protection degree	
Productview	

BAE00JA BAE LX-VS-OR100	BAE00J9 BAE LX-VS-OR50
Connector, M8x1 connector, 3-pin	Connector, M8x1 connector, 3-pin
Coax lighting	Coax lighting
150 x 110 x 108 mm	106 x 57 x 67 mm
24 V	24 V
625 mA	250 mA
Normal	Normal
Aluminum anodized, black Glass	Aluminum anodized, black Glass
100 x 100 mm	50 x 50 mm
LED, red light	LED, red light
630 nm	630 nm
3550 Lux	1150 Lux
105 ° x 105 °	30 ° x 30 °
-10...55 °C	-10...55 °C
CE, EAC	CE, EAC
IP54	IP54
Page 582	Page 582

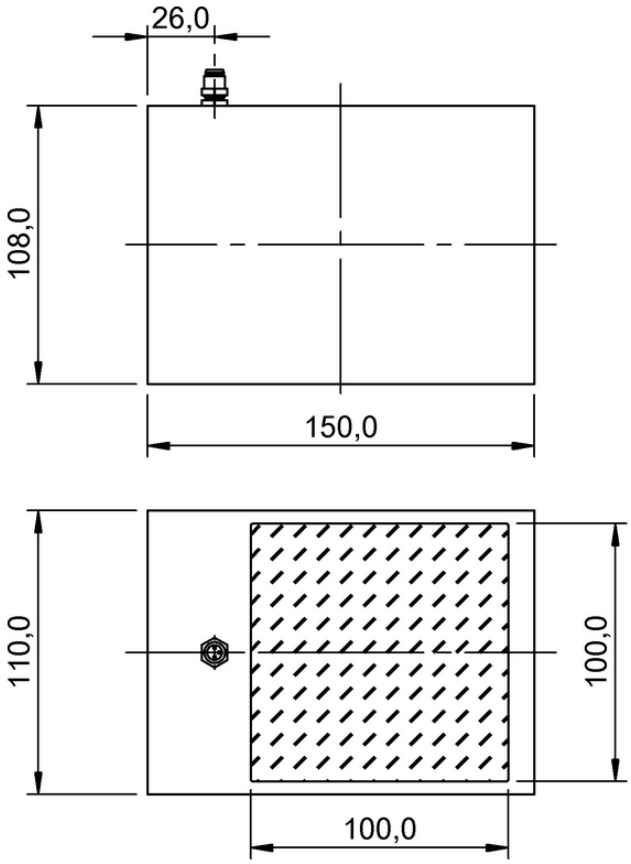

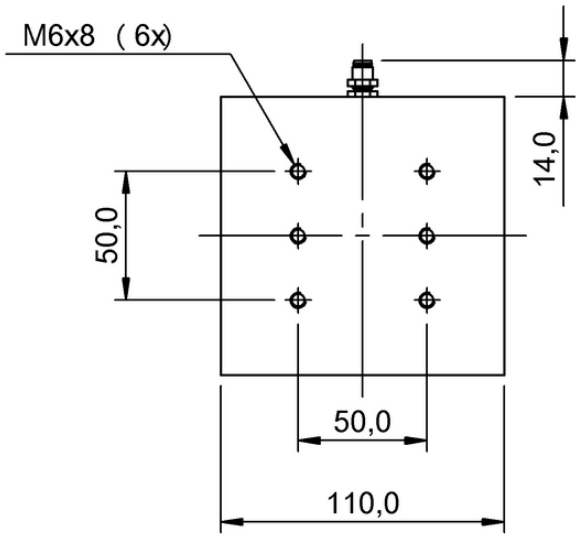

BAE00JA

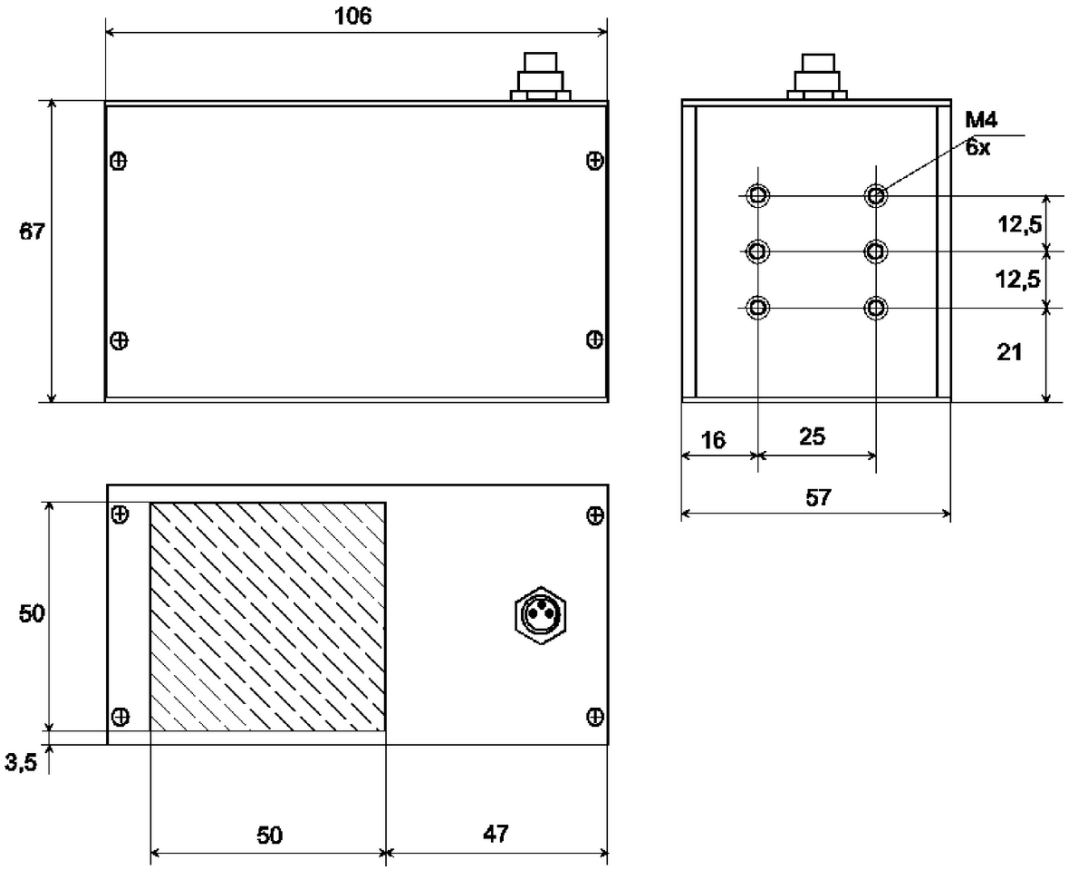

BAE00J9

	BAE00H1 BAE LX-VS-SI018	BAE011K BAE LX-VS-SI030A	
Connection	Cable with connector, M12x1-Male, 4-pin, 0.30 m	Cable with connector, M12x1-Male, 4-pin, 0.3 m	
Version	Spotlight	Spotlight	
Dimension	Ø 18 x 75 mm	Ø 30 x 67.5 mm	
Rated operating voltage Ue DC	24 V	24 V	
Current draw max.	83 mA	300 mA	
Operating mode	Normal	Normal, Boost	
Digital inputs	Trigger	Trigger	
Material	Stainless steel (1.4301) Brass Glass	Stainless steel (1.4301) Brass PC	
Illumination area	Ø 15.4 mm	Ø 25 mm	
Light type	LED infrared	LED infrared	
Wave length	875 nm	850 nm	
Illuminence (0.1 m)	—	—	
Beam angle	—	10 °	
Ambient temperature	-25...75 °C	-10...50 °C	
Approval/Conformity	CE, EAC, WEEE	CE, EAC, WEEE	
IP rating	IP67	IP67	
Productview	Page 586	Page 586	

	BAE00KF BAE LX-VS-SR012	BAE00H0 BAE LX-VS-SR018	BAE011L BAE LX-VS-SR030A	BAE011M BAE LX-VS-SW030A
	Cable with connector, M12x1-Male, 4-pin, 0.30 m	Cable with connector, M12x1-Male, 4-pin, 0.30 m	Cable with connector, M12x1-Male, 4-pin, 0.3 m	Cable with connector, M12x1-Male, 4-pin, 0.3 m
	Spotlight	Spotlight	Spotlight	Spotlight
	Ø 12 x 41.5 mm	Ø 18 x 75 mm	Ø 30 x 67.5 mm	Ø 30 x 67.5 mm
	24 V	24 V	24 V	24 V
	83 mA	83 mA	300 mA	300 mA
	Normal	Normal	Normal, Boost	Normal, Boost
	Trigger	Trigger	Trigger	Trigger
	Stainless steel (1.4301) PC	Stainless steel (1.4301) Brass Glass	Stainless steel (1.4301) Brass PC	Stainless steel (1.4301) Brass PC
	Ø 9 mm	Ø 15.4 mm	Ø 25 mm	Ø 25 mm
	LED, red light	LED, red light	LED, red light	LED white light
	617 nm	617 nm	625 nm	—
	600 Lux	10500 Lux	1100 Lux 190000 Lux (Boost mode)	1200 Lux 200000 Lux (Boost mode)
	20 °	15 °	10 °	10 °
	-10...50 °C	-10...50 °C	-10...50 °C	-10...50 °C
	CE, EAC, WEEE	CE, EAC, WEEE	CE, EAC, WEEE	CE, EAC, WEEE
	IP67	IP67	IP67	IP67
	Page 587	Page 586	Page 586	Page 586

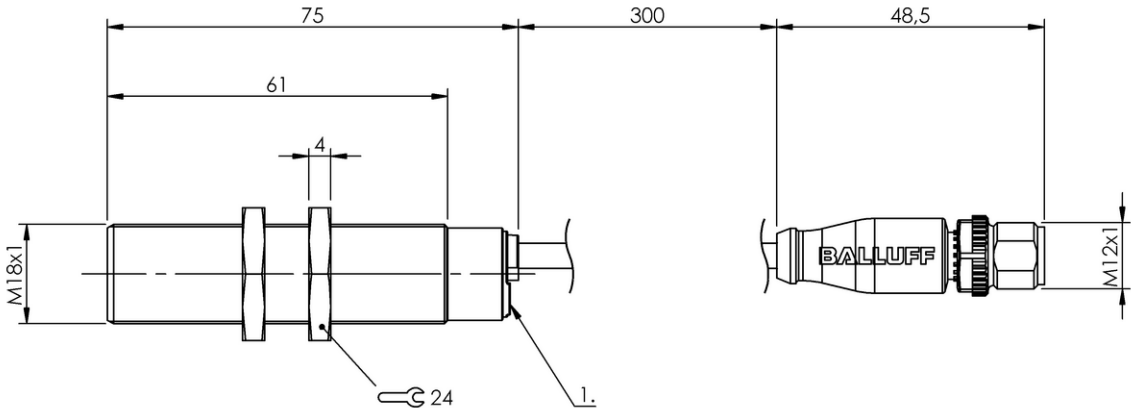

1) Power green

BAE00H1, BAE00H0

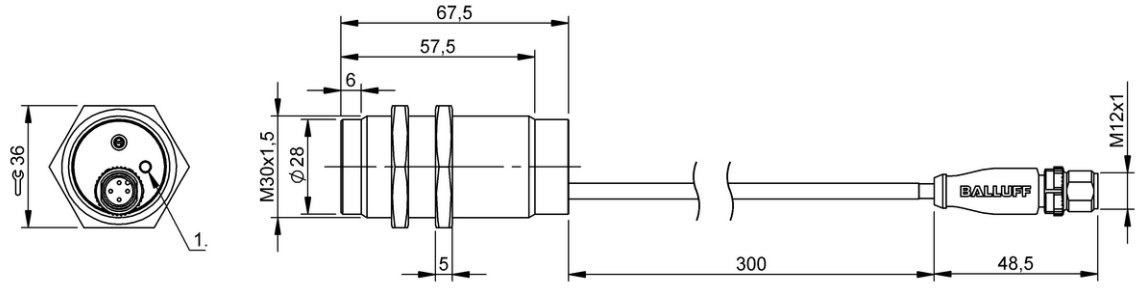

1) Power green

BAE011K, BAE011L, BAE011M

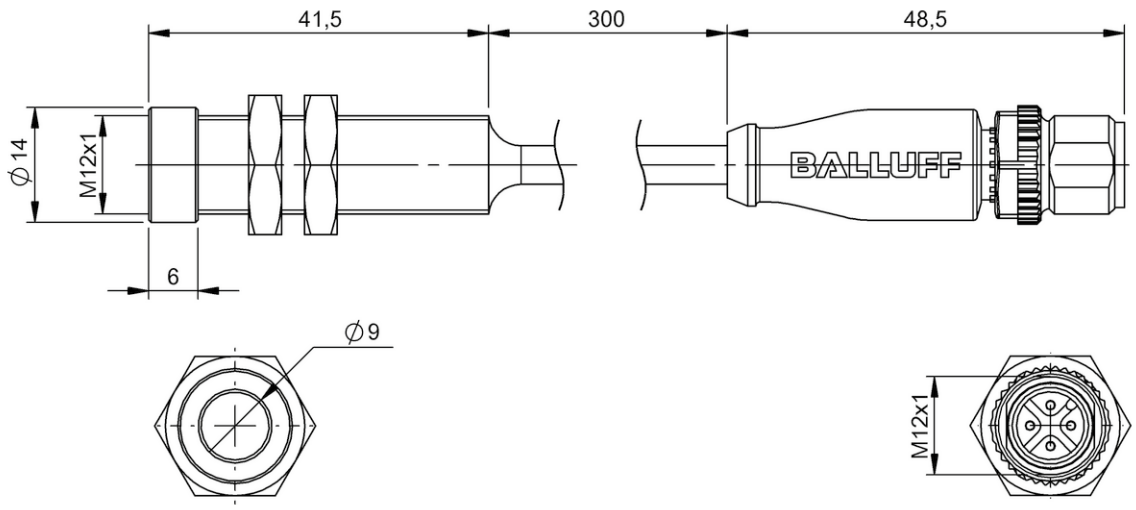

BAE00KF

	BAE010A BAE LX-X0-PL018-E-C1-S103	BAE0104 BAE LX-X0-PL018-E-L1-S103	
Connection	Connector, M12x1 connector, 5-pin	Connector, M12x1 connector, 5-pin	
Version	Laser modules	Laser modules	
Dimension	Ø 20 x 116 mm	Ø 20 x 116 mm	
Operating voltage Ub	5...30 VDC	5...30 VDC	
Digital inputs	Trigger	Trigger	
Material	Stainless steel Glass Nickel-plated brass nuts	Stainless steel Glass Nickel-plated brass nuts	
Projection type	Cross	Line, homogeneous	
Opening angle min.	30° x 30°	45°	
Light type	Laser red light	Laser red light	
Wave length	635 nm	640 nm	
Laser class per IEC 60825-1	1M	2M	
Ambient temperature	-10...50 °C	-10...50 °C	
Approval/Conformity	CE, EAC	CE, EAC	
Protection degree	IP67	IP67	
Productview	Page 590	Page 590	

	BAE0106 BAE LX-X0-PL018-E-L3-S103	BAE0107 BAE LX-X0-PL018-E-L7-S103	BAE0108 BAE LX-X0-PL018-E-L8-S103	BAE0109 BAE LX-X0-PL018-E-P1-S103
	Connector, M12x1 connector, 5-pin	Connector, M12x1 connector, 5-pin	Connector, M12x1 connector, 5-pin	Connector, M12x1 connector, 5-pin
	Laser modules	Laser modules	Laser modules	Laser modules
	Ø 20 x 116 mm	Ø 20 x 116 mm	Ø 20 x 116 mm	Ø 20 x 116 mm
	5...30 VDC	9...30 VDC	9...30 VDC	5...30 VDC
	Trigger	Trigger	Trigger	Trigger
	Stainless steel Glass Nickel-plated brass nuts	Stainless steel Glass Nickel-plated brass nuts	Stainless steel Glass Nickel-plated brass nuts	Stainless steel Glass Nickel-plated brass nuts
	Line, homogeneous	Line, homogeneous	Line, homogeneous	Point, elliptical
	20°	45°	45°	–
	Laser red light	Laser, blue light	Laser green light	Laser red light
	640 nm	450 nm	520 nm	635 nm
	2M	2M	2M	2
	-10...50 °C	-10...50 °C	-10...50 °C	-10...50 °C
	CE, EAC	CE, EAC	CE, EAC	CE, EAC
	IP67	IP67	IP67	IP67
	Page 590	Page 590	Page 590	Page 590

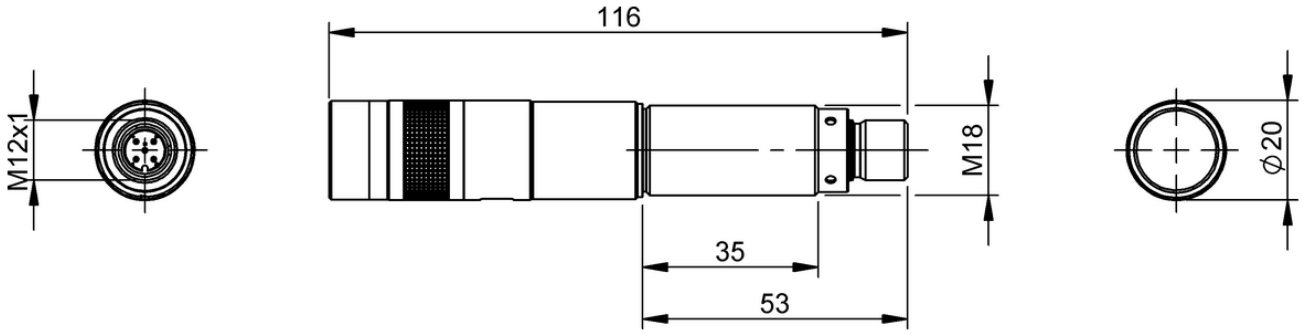

BAE010A, BAE0104, BAE0106, BAE0107, BAE0108, BAE0109

	BAE00W8 BAE LX-XA-BW0170-S4	BAE011E BAE LX-XA-BW0170A-S4	
Connection	Connector, M12x1-Male	Connector, M12x1-Male, 4-pin	
Version	Machine light	Machine light	
Dimension	Ø 20 x 250 mm	Ø 45 x 210 mm	
Rated operating voltage Ue DC	24 V	24 V	
Housing material primary	Aluminum	Aluminum	
Housing material secondary	PMMA	Borosilicate crown glass	
Illumination area	170 x 14 mm	170 x 42 mm	
Beam angle	120 °	120 °	
Light type	LED white light	LED white light diffuse	
Light intensity	410 lm	900 lm	
Color temperature	4000 K	5000 K	
Ambient temperature	-25...60 °C	-20...40 °C	
Approval/Conformity	CE, EAC, cULus, WEEE	CE, EAC, UL Listed, WEEE	
IP rating	IP69K	IP67	
Productview	Page 596	Page 596	

	BAE00W9 BAE LX-XA-BW0278-S4	BAE00WA BAE LX-XA-BW0332-S4	BAE00ZM BAE LX-XA-BW0380A-S4	BAE00Y4 BAE LX-XA-BW0530-S4
	Connector, M12x1-Male	Connector, M12x1-Male	Connector, M12x1-Male, 4-pin	Connector, M12x1-Male
	Machine light	Machine light	Machine light	Machine light
	Ø 20 x 358 mm	Ø 20 x 432 mm	Ø 45 x 420 mm	Ø 20 x 610 mm
	24 V	24 V	24 V	24 V
	Aluminum	Aluminum	Aluminum	Aluminum
	PMMA	PMMA	Borosilicate crown glass	PMMA
	278 x 14 mm	332 x 14 mm	380 x 42 mm	530 x 14 mm
	120 °	120 °	120 °	120 °
	LED white light	LED white light	LED white light diffuse	LED white light
	654 lm	746 lm	1800 lm	1256 lm
	4000 K	4000 K	5000 K	4000 K
	-25...60 °C	-25...60 °C	-20...40 °C	-25...60 °C
	CE, EAC, cULus, WEEE	CE, EAC, cULus, WEEE	CE, EAC, cULus, WEEE	CE, EAC, cULus, WEEE
	IP69K	IP69K	IP67	IP69K
	Page 597	Page 597	Page 598	Page 598

	BAE00ZN BAE LX-XA-BW0560A-S4	BAE00Y5 BAE LX-XA-BW0710-S4	
Connection	Connector, M12x1-Male, 4-pin	Connector, M12x1-Male	
Version	Machine light	Machine light	
Dimension	Ø 45 x 600 mm	Ø 20 x 790 mm	
Rated operating voltage Ue DC	24 V	24 V	
Housing material primary	Aluminum	Aluminum	
Housing material secondary	Borosilicate crown glass	PMMA	
Illumination area	560 x 42 mm	710 x 14 mm	
Beam angle	120 °	120 °	
Light type	LED white light diffuse	LED white light	
Light intensity	2700 lm	1661 lm	
Color temperature	5000 K	4000 K	
Ambient temperature	-20...40 °C	-25...60 °C	
Approval/Conformity	CE, EAC, cULus, WEEE	CE, EAC, cULus, WEEE	
IP rating	IP67	IP69K	
Productview	Page 599	Page 599	

	BAE00ZP BAE LX-XA-BW0760A-S4	BAE00ZR BAE LX-XA-BW0960A-S4	BAE00Y6 BAE LX-XA-BW1016-S4	BAE00ZT BAE LX-XA-BW1160A-S4
	Connector, M12x1-Male, 4-pin	Connector, M12x1-Male, 4-pin	Connector, M12x1-Male	Connector, M12x1-Male, 4-pin
	Machine light	Machine light	Machine light	Machine light
	Ø 45 x 800 mm	Ø 45 x 1000 mm	Ø 20 x 1096 mm	Ø 45 x 1200 mm
	24 V	24 V	24 V	24 V
	Aluminum	Aluminum	Aluminum	Aluminum
	Borosilicate crown glass	Borosilicate crown glass	Borosilicate crown glass	Borosilicate crown glass
	760 x 42 mm	960 x 42 mm	1016 x 14 mm	1160 x 42 mm
	120 °	120 °	120 °	120 °
	LED white light diffuse	LED white light diffuse	LED white light	LED white light diffuse
	3600 lm	4500 lm	2268 lm	5400 lm
	5000 K	5000 K	4000 K	5000 K
	-20...40 °C	-20...40 °C	-25...60 °C	-20...40 °C
	CE, EAC, cULus, WEEE	CE, EAC, cULus, WEEE	CE, EAC, cULus, WEEE	CE, EAC, cULus, WEEE
	IP67	IP67	IP69K	IP67
	Page 600	Page 600	Page 601	Page 601

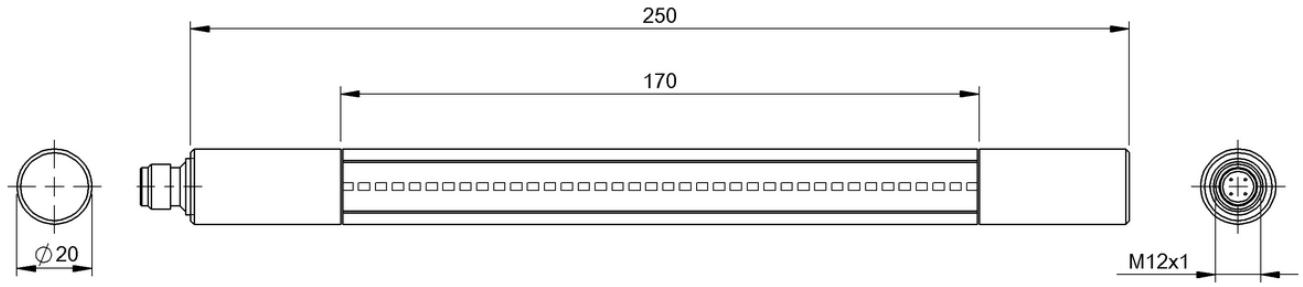

BAE00W8

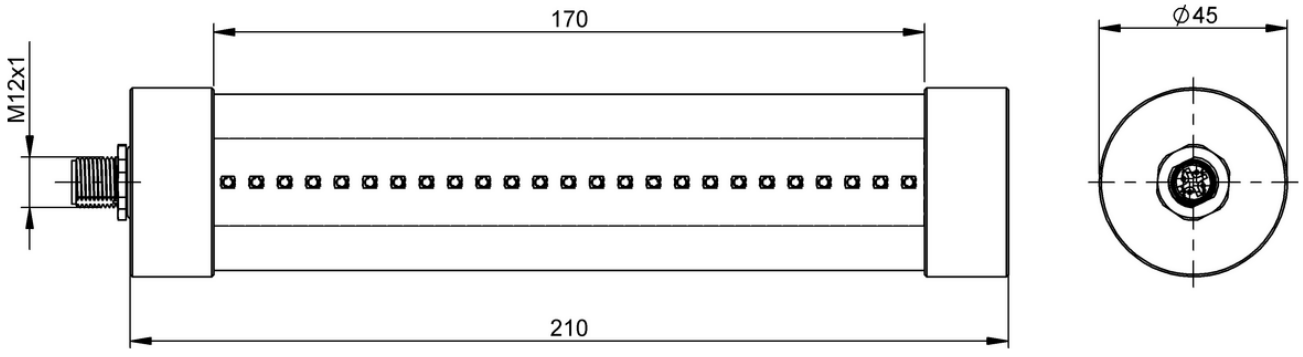

BAE011E

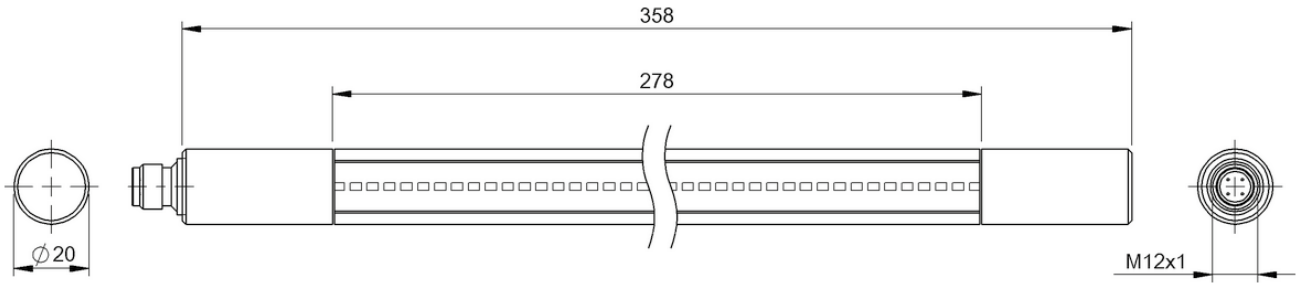

BAE00W9

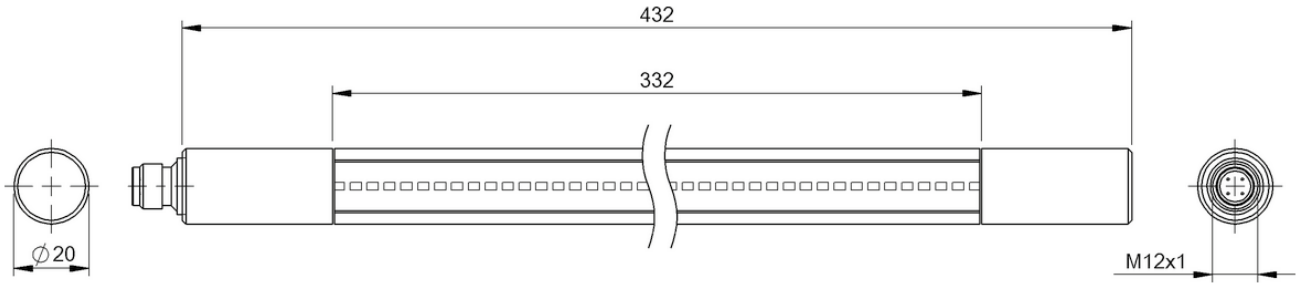

BAE00WA

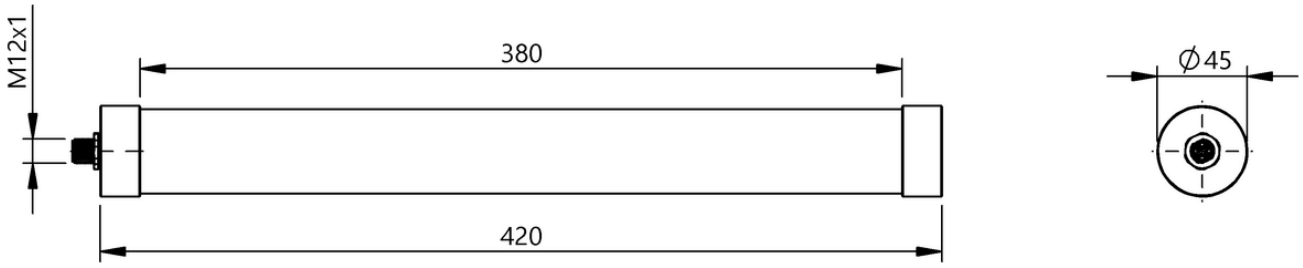

BAE00ZM

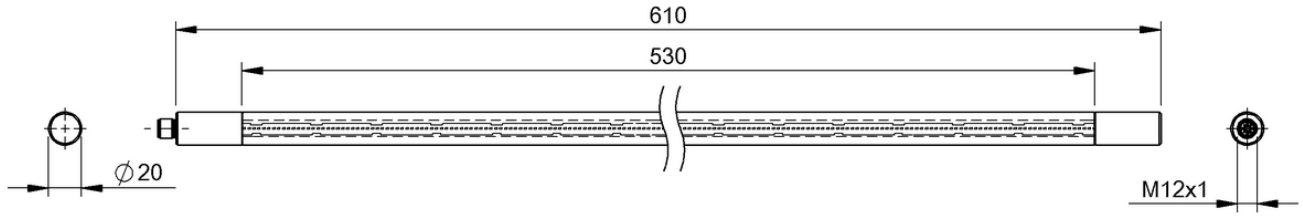

BAE00Y4

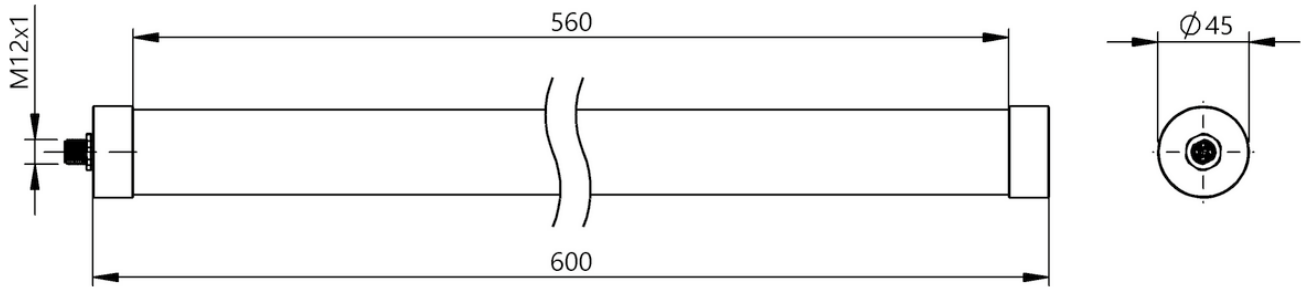

BAE00ZN

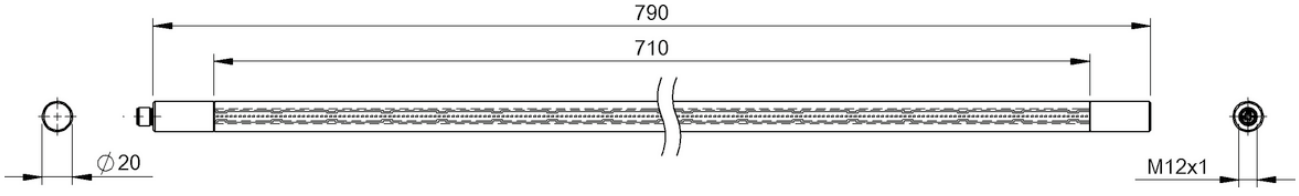

BAE00Y5

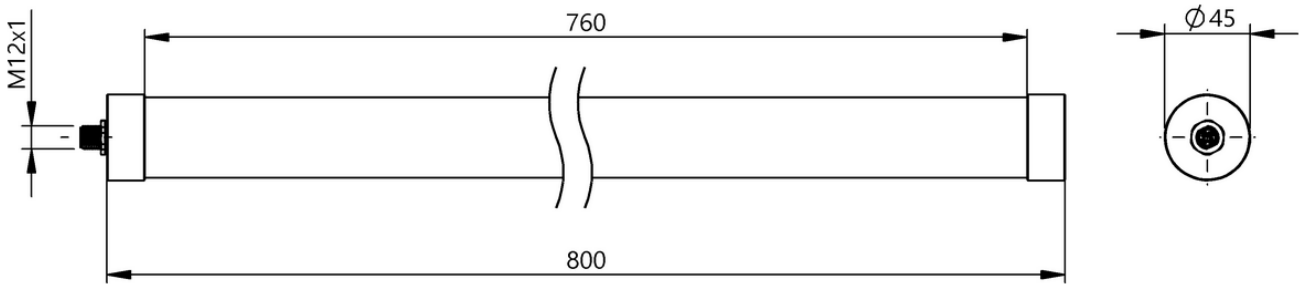

BAE00ZP

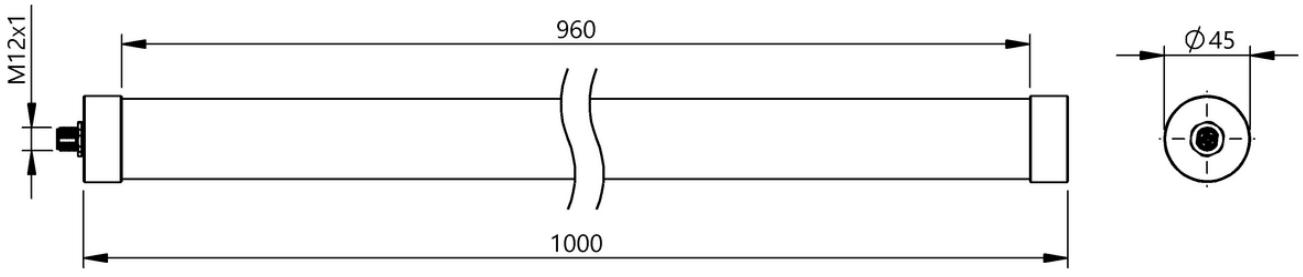

BAE00ZR

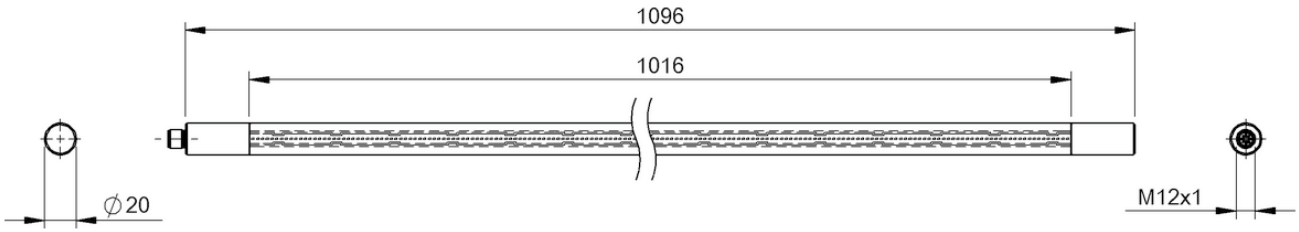

BAE00Y6

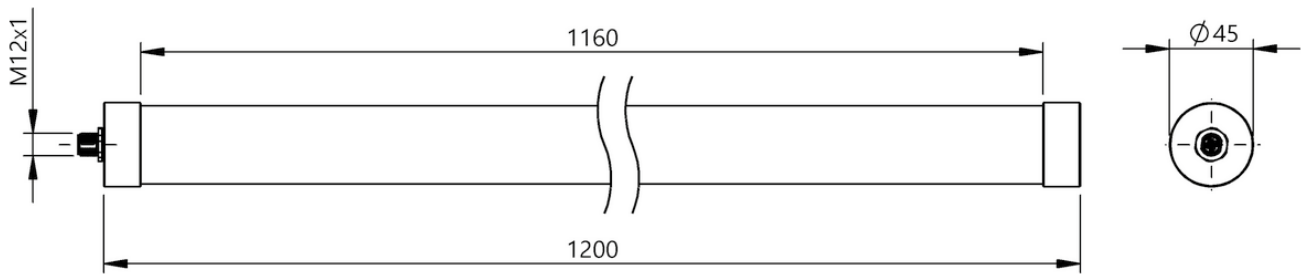

BAE00ZT

Efficiently transport signals with signal converters

SIGNAL CONVERTERS AND COMMUNICATION ADAPTERS

Our signal converters store an incoming signal in a specific format and output it in a different format.

Frequently, such modules are used in the conversion of analog signals into digital signals or vice versa. Likewise, you can convert different communication protocols using signal converters.

The most important benefits

- Easy installation
- Installation in the control cabinet or directly on the sensor
- Adaptation of the output signal to the application
- Mixing of different signals on an assembly possible
- Cost reduction potential

	BAE0070 BES 516-615-PS-1-PU-05
Principle of operation	Signal converter
Additional text	For direct installation
Connection	Cable
Connection for sensor	M12x1-Female, 5-pole, A-coded
Analog inputs	Analog, voltage (0…10 V)
Switching output	3x PNP normally open (NO)
Material	Brass nickel plated
Ambient temperature	-10...70 °C
Protection degree	IP67
Approval/Conformity	CE

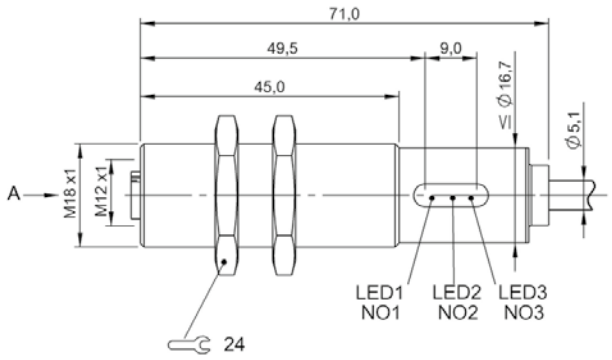
71,0
49,5
9,0
45,0
≤ Ø16,7
Ø5,1
A
M18 x1
M12 x1
LED1
NO1
LED2
NO2
LED3
NO3
24

BAE0070

	BNI0073 BNI USB-901-013-A501
Interface	IO-Link 1.1
Dimension	66 x 24 x 69 mm
Material	Aluminum
Ambient temperature	-5...55 °C
Protection degree	IP21
Approval/Conformity	CE

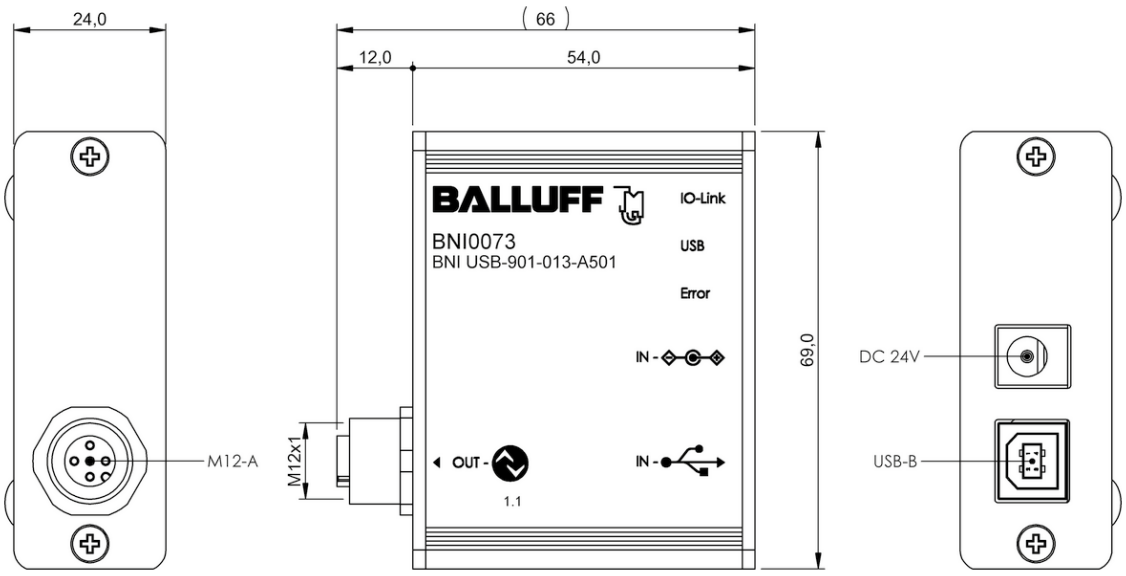
24,0
66
12,0
54,0
BALLUFF
IO-Link
BNI0073
BNI USB-901-013-A501
USB
Error
IN -
69,0
DC 24V
M12-A
M12x1
OUT -
1.1
IN -
USB-B

BNI0073

	BNI00C9 BNI IOL-717-002-E023	BNI00C8 BNI IOL-725-002-E023	
Version	Analog converter	Analog converter	
Interface	IO-Link 1.1	IO-Link 1.1	
Function	—	—	
Operating voltage Ub	18...30.2 VDC	18...30.2 VDC	
Digital inputs	—	—	
Analog inputs	Analog, voltage/Analog, current/ analog, temperature (0…10 V/-10…10 V/0…5 V/-5…5 V/5...10 V/4…20 mA/0…20 mA/Pt100/ Pt1000)	—	
Analog outputs	—	Analog, voltage/Analog, current (0…10 V/-10…10 V/0…5 V/-5…5 V/5...10 V/4…20 mA/0…20 mA)	
Configurable inputs/outputs	yes	yes	
Resolution	≤ 16 bits	≤ 16 bits	
Connection	M12x1-Male, 4-pole, A-coded	M12x1-Male, 4-pole, A-coded	
Connection for sensor	M12x1-Female, 5-pole, A-coded	M12x1-Female, 5-pole, A-coded	
Housing material	Stainless steel (1.4305) PTFE	Stainless steel (1.4305) PTFE	
Dimension	Ø 18 x 135.5 mm	Ø 18 x 135.5 mm	
Ambient temperature	-5...70 °C	-5...70 °C	
Protection degree	IP67 when threaded in	IP67 when threaded in	
Approval/Conformity	CE	CE	
Transfer rate	COM2 (38.4 kBaud)	COM2 (38.4 kBaud)	
Process data cycle min.	10 ms	10 ms	
Process data in	3 bytes	—	
Process data out	—	2 bytes	
Productview	Page 614	Page 614	

	BNI00C6 BNI IOL-730-002-E023	BNI00C7 BNI IOL-740-002-E023	BNI00C1 BNI IOL-760-002-E066	BNI0041 BNI IOL-712-000-K023
	Analog converter	Analog converter	RS232 converter	Analog converter
	IO-Link 1.1	IO-Link 1.1	IO-Link 1.1, RS232	IO-Link 1.0
	—	—	—	—
	18...30.2 VDC	18...30.2 VDC	18...30.2 VDC	18...30.2 VDC
	—	—	4x PNP, Type 3	—
	Analog, voltage/Analog, current/ analog, temperature (0…10 V/-10…10 V/0…5 V/-5…5 V/5...10 V/4…20 mA/0…20 mA/Pt100/ Pt1000/Thermocouple Type J/Thermocouple Type K)	Analog, temperature (Pt100/ Pt1000/Thermocouple Type J /Thermocouple Type K)	—	Analog, current (0…20 mA)
	Analog, voltage/Analog, current (0…10 V/-10…10 V/0…5 V/-5…5 V/5...10 V/4…20 mA/0…20 mA)	—	—	—
	yes	yes	no	no
	≤ 16 bits	≤ 16 bits	—	≤ 14 bits
	M12x1-Male, 4-pole, A-coded	M12x1-Male, 4-pole, A-coded	M12x1 connector, 4-pin	M12x1-Male, 4-pole, A-coded
	M12x1-Female, 5-pole, A-coded	M12x1-Female, 5-pole, A-coded	M12x1-Female, 8-pole, A-coded	M12x1-Female, 4-pole, A-coded
	Stainless steel (1.4305) PTFE	Stainless steel (1.4305) PTFE	Stainless steel (1.4305) PTFE	PA
	Ø 18 x 135.5 mm	Ø 18 x 135.5 mm	Ø 18 x 118 mm	14.2 x 50.4 x 40 mm
	-5...70 °C	-5...70 °C	-5...55 °C	-5...70 °C
	IP67 when threaded in	IP67 when threaded in	IP67 when threaded in	IP67 when threaded in
	CE	CE	CE	CE
	COM2 (38.4 kBaud)	COM2 (38.4 kBaud)	COM2 (38.4 kBaud)	COM2 (38.4 kBaud)
	10 ms	10 ms	35.2 ms	3 ms
	3 bytes	3 bytes	32 bytes	2 bytes
	2 bytes	—	32 bytes	—
	Page 614	Page 614	Page 614	Page 615

	BNI0042 BNI IOL-714-000-K023	BNI004T BNI IOL-716-000-K023	
Version	Analog converter	Analog converter	
Interface	IO-Link 1.0	IO-Link 1.0	
Function	—	—	
Operating voltage Ub	18...30.2 VDC	18...30.2 VDC	
Digital inputs	—	—	
Analog inputs	Analog, voltage (0…10 V)	Analog, Temperature (Pt100)	
Analog outputs	—	—	
Configurable inputs/outputs	no	no	
Resolution	≤ 14 bits	≤ 14 bits	
Connection	M12x1-Male, 4-pole, A-coded	M12x1-Male, 4-pole, A-coded	
Connection for sensor	M12x1-Female, 4-pole, A-coded	M12x1-Female, 4-pole, A-coded	
Housing material	PA	PA	
Dimension	14.2 x 50.4 x 40 mm	14.2 x 50.4 x 40 mm	
Ambient temperature	-5...70 °C	-5...70 °C	
Protection degree	IP67 when threaded in	IP67 when threaded in	
Approval/Conformity	CE	CE	
Transfer rate	COM2 (38.4 kBaud)	COM2 (38.4 kBaud)	
Process data cycle min.	3 ms	12 ms	
Process data in	2 bytes	2 bytes	
Process data out	—	—	
Productview	Page 615	Page 615	

	BNI004C BNI IOL-722-000-K023	BNI004E BNI IOL-724-000-K023	BAE0073 BES 516-IV 2	BAE002E BOS S-C01
	Analog converter	Analog converter	—	—
	IO-Link 1.0	IO-Link 1.0	—	—
	—	—	Pulse lengthening	Part counter (1 pulse per part), Divider (1 pul. per x parts), Switching amplifier up to 400 mA, Flip flop (on/off switch), Switching inverter (NO/NC)
	18...30.2 VDC	18...30.2 VDC	10...30 VDC	10...30 VDC
	—	—	PNP/NPN	PNP
	—	—	—	—
	Analog, current (4…20 mA)	Analog, voltage (0…10 V)	—	—
	no	no	—	—
	≤ 14 bits	≤ 14 bits	—	—
	M12x1-Male, 4-pole, A-coded	M12x1-Male, 4-pole, A-coded	Screw terminal	Connector, M12x1
	M12x1-Female, 4-pole, A-coded	M12x1-Female, 4-pole, A-coded	4-pole	M12x1-Female, 4-pole
	PA	PA	Plastic	PBT PA
	14.2 x 50.4 x 40 mm	14.2 x 50.4 x 40 mm	58 x 90 x 17.5 mm	Ø 20 x 60 mm
	-5...70 °C	-5...70 °C	0...60 °C	0...60 °C
	IP67 when threaded in	IP67 when threaded in	IP20, IP40	IP67
	CE	CE	CE	CE
	COM2 (38.4 kBaud)	COM2 (38.4 kBaud)	—	—
	12 ms	12 ms	—	—
	2 bytes	2 bytes	—	—
	2 bytes	2 bytes	—	—
	Page 615	Page 615	Page 615	Page 616

	BAE002H BOS S-F01	BAE002J BOS S-F02	
Function	Switching amplifier up to 400 mA, Output converter (PNP/NPN), Switching inverter (NO/NC)	Switching amplifier up to 400 mA, Output converter (PNP/NPN), Switching inverter (NO/NC)	
Operating voltage Ub	10...30 VDC	10...30 VDC	
Digital inputs	PNP	NPN	
Connection	Connector, M12x1	Connector, M12x1	
Connection for sensor	M12x1-Female, 4-pole	M12x1-Female, 4-pole	
Housing material	PBT PA	PBT PA	
Dimension	Ø 20 x 60 mm	Ø 20 x 60 mm	
Ambient temperature	0...60 °C	0...60 °C	
Protection degree	IP67	IP67	
Approval/Conformity	CE	CE	
Productview	Page 616	Page 616	

	BAE002K BOS S-M01	BAE002L BOS S-M02	BAE002M BOS S-T01	BAE002N BOS S-T02
	Frequency monitor up to 1 kHz, Switching amplifier up to 400 mA	Frequency monitor up to 1 kHz, Switching amplifier up to 400 mA	Switching amplifier up to 400 mA, Timer on/off delay	Switching amplifier up to 400 mA, Timer on/off delay
	10...30 VDC	10...30 VDC	10...30 VDC	10...30 VDC
	PNP	NPN	PNP	NPN
	Connector, M12x1	Connector, M12x1	Connector, M12x1	Connector, M12x1
	M12x1-Female, 4-pole	M12x1-Female, 4-pole	M12x1-Female, 4-pole	M12x1-Female, 4-pole
	PBT PA	PBT PA	PBT PA	PBT PA
	Ø 20 x 60 mm	Ø 20 x 60 mm	Ø 20 x 60 mm	Ø 20 x 60 mm
	0...60 °C	0...60 °C	0...60 °C	0...60 °C
	IP67	IP67	IP67	IP67
	CE	CE	CE	CE
	Page 616	Page 616	Page 616	Page 616

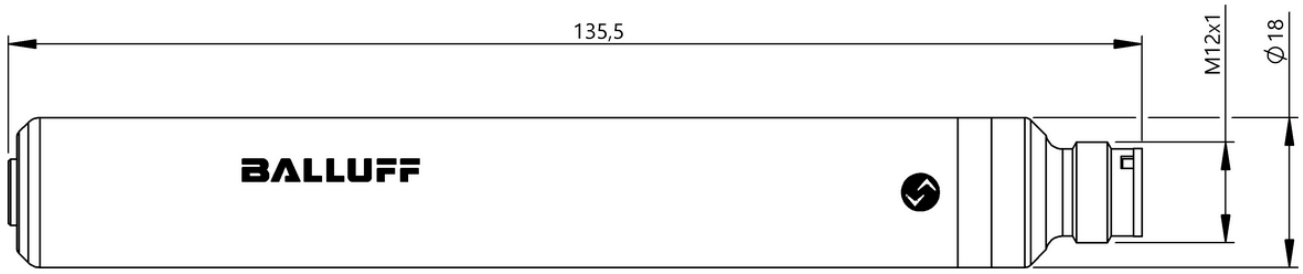

BNI00C9, BNI00C8, BNI00C6, BNI00C7

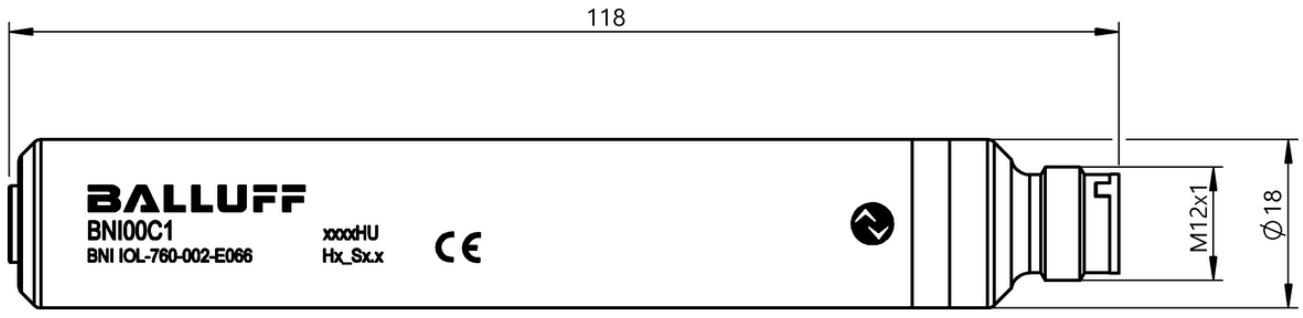

BNI00C1

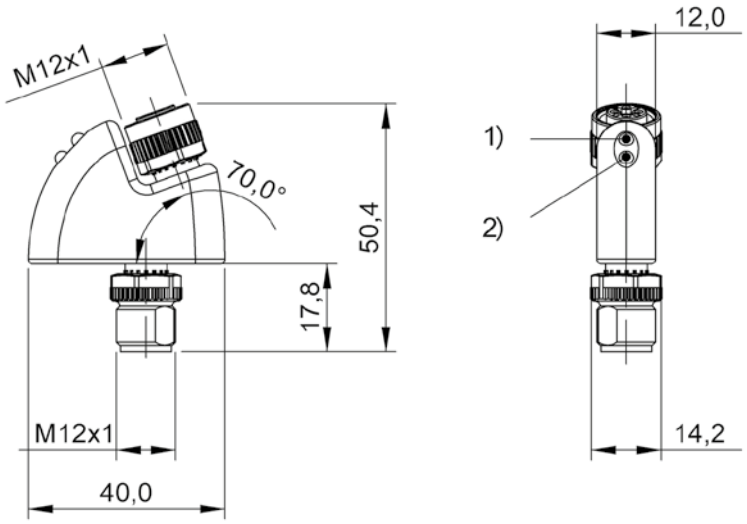

BNI0041, BNI0042, BNI004T, BNI004C, BNI004E

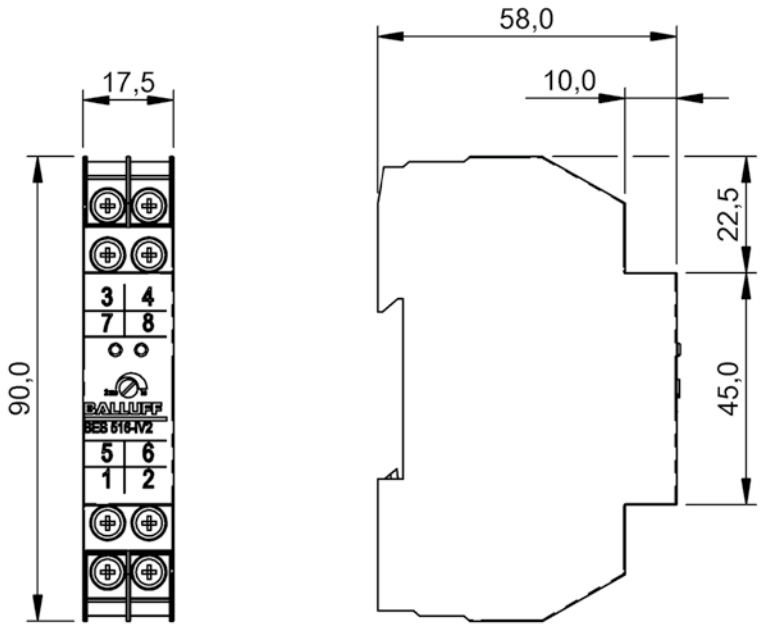

BAE0073

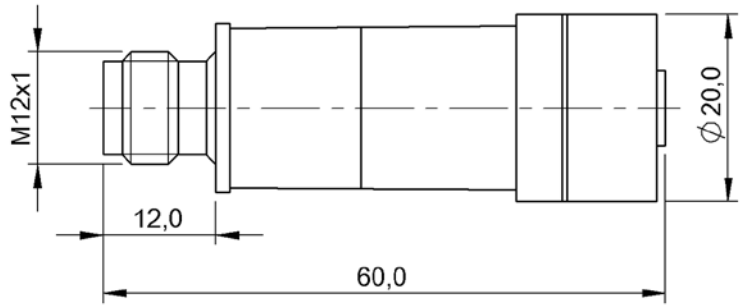

BAE002E, BAE002H, BAE002J, BAE002K, BAE002L, BAE002M, BAE002N

	BAE00ZU BAE SA-XE-051-XR	
Use	—	
Operating voltage Ub	21.6...26.4 VDC	
Ambient temperature	-20...60 °C	
Protection degree	IP20	
Approval/Conformity	CE, EAC	
Productview	Page 620	

	BAE00ZY BAE SA-XE-052-XR	BAE00ZW BAE SA-XE-053-XR
	—	—
	103.5...126.5 VAC	207...253 VAC
	-20...60 °C	-20...60 °C
	IP20	IP20
	CE, EAC	CE, EAC
	Page 620	Page 620

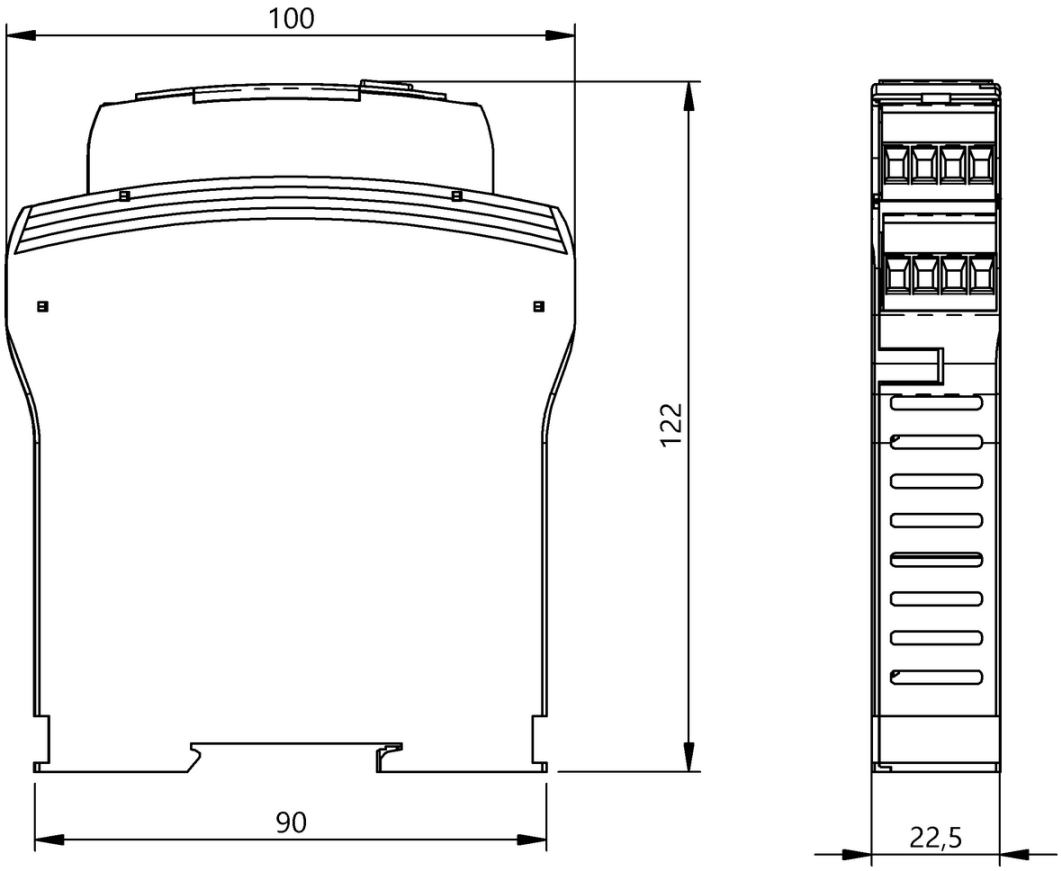

1) Sensing surface

BAE00ZU, BAE00ZY, BAE00ZW

Accessories

BASICS AND GLOSSARY

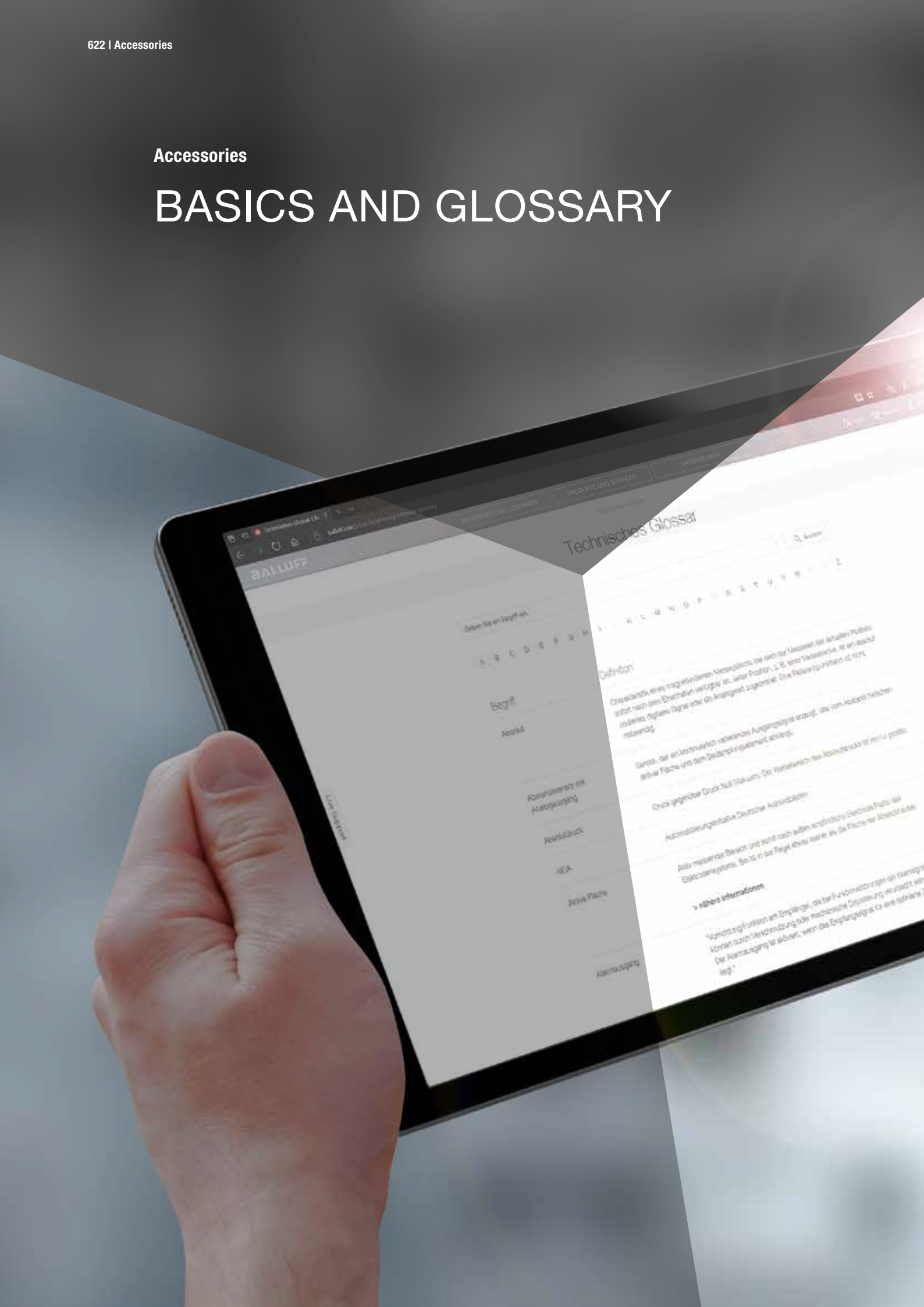

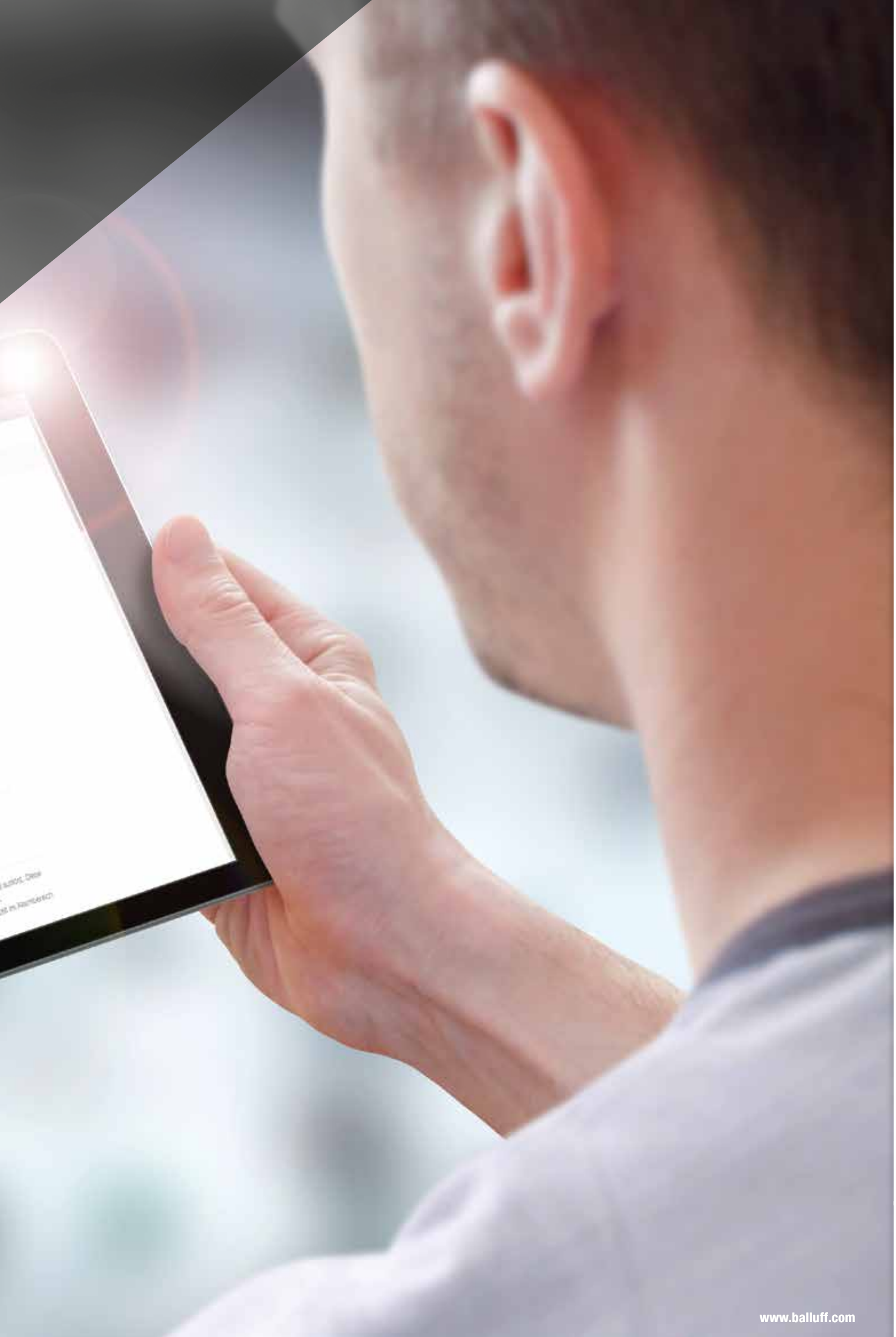

FASTENERS

Mounting of mounting clamps

Small sensors or fiber optics are used in compact systems. In some situations, they are the only option. Tight spaces under demanding conditions often make positioning of the miniature sensors difficult. The mounting clamps demonstrate their diversity by holding a range of different sensors and fiber optics. They are extremely stable, variable and flexible. With just a few work steps, sensors and fiber optics can be mounted on housings or base plates.

- Mounting clamps for smooth sensors and fiber optics: Ø 3 mm, Ø 4 mm, Ø 6.5 mm, Ø 8 mm
- Simple and economical mounting
- Minimal wall thickness for internal threaded bore: 2 mm

ACCESSORIES FOR PHOTOELECTRIC SENSORS

Deflection heads, suitable combinations

All BOS 18 photoelectric sensors can be equipped with a 90° deflection head. The table shows the appropriate deflection head for each switch type and indicates the corresponding reduction factor (RF) to apply to the range. With a through-beam sensor, the emitter and the receiver can be equipped with a 90° deflection head. Each deflection head reduces the range by approx. 15...50 %.

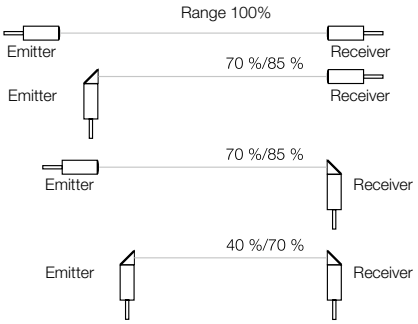

Diagonal mirrors

When using the diagonal mirror, the sensing range is reduced by 30% for the M12 diffuse and M12 through-beam sensors. Not suitable for retroreflective sensors.

LIGHTS

What should the distance between the light and the component be?

The intensity of illumination on an object decreases quadratically with the working distance. Therefore objects that are farther away appear darker than closer objects. A bright object should be inspected, for example, once at a distance of 10 cm and once at 100 cm. The brightness of the object at 10 cm is 100 times greater than at a distance of 100 cm. Select the optimum distance between the light source, sensor and target object. In order to prevent saturation, make sure that the brightness of the light source is correct.

How should reflective components be illuminated?

When inspecting highly reflective surfaces, the sensor must be mounted with extreme care. If necessary, attach an external light to a suitable bracket in order to maximize the contrast between the object to be detected and the background.

How can the illumination of the part to be inspected be kept constant?

Avoid fluctuations in brightness due to ambient light, sunlight or other external light sources. These fluctuations are the most frequent cause of errors in image processing and are often difficult to identify. Errors can be limited by decreasing the exposure time of the sensor. External lighting may be required in addition to the light inside the sensor. Alternative solutions include covers or any kind of physical screen that specifically controls the light within the inspection area.

How should the field of view be illuminated?

The entire image area should be illuminated as evenly as possible. Avoid extremely bright points or dark areas. The component features you wish to inspect should, however, contrast as much as possible and show up clearly on the background. If you want to check for the presence of a certain feature, you can illuminate the component so that a clear shadow is cast upon the function to be identified. The Vision Sensor can then detect the feature.

MATERIALS

Material	Use and characteristics
PLASTICS	
ABS Acrylnitrile-Butadiene-Styrene	Impact-resistant, stiff, limited chemical resistance. Some types flame-retardant. Housing material.
AES/CP Acrylnitrile-Ethylene-Propylene-Styrene	Impact-resistant, stiff, limited chemical resistance. Housing material.
EP Epoxy resin	Duromer, molded plastic material, highest mechanical strength and temperature resistance. Very good dimensional stability. Cannot be melted.
Epoxy resin - hollow glass spheres	Hollow glass spheres can be treated with epoxy resins. They are used for manufacturing converters with low density and high pressure rating.
FEP Tetrafluorethylene-perfluorpropylene	High temperature resistance up to 180 °C, insulation material for cable.
LCP Liquid Crystalline Polymer	High mechanical strength and temperature resistance. Very good chemical resistance. Inherently non-flammable.
PA Polyamide	High impact resistance, good chemical resistance.
PA 6, PA 66, PA mod., PA 12 Polyamide	Good mechanical strength. Temperature resistance. PA 12 approved for food industry applications.
PA transp. Transparent polyamide	Transparent, hard, inflexible. Good chemical resistance.
PBT Polybutylene terephtalate	High mechanical strength and temperature resistance. Some types flame-retardant. Good chemical resistance. Good oil resistance.
PC Polycarbonate	Clear, hard, elastic and impact resistant. Good temperature resistance. Limited chemical resistance.
PEEK Polyetheretherketone	Thermoplastic. Very high strength and temperature resistance. Good chemical resistance. Can be sterilized, good resistance to ionizing radiation.
PEI Polyetherimide	High mechanical strength and good temperature resistance. Good chemical resistance even with many solvents. Transparent with amber-yellow inherent color (not pigmented).
PET Polyethylene terephtalate	High resistance to breakage, good dimensional stability. Frequently used in the food industry.
PMMA Polymethylmethacrylate	Clear, transparent, hard, scratch-resistant, UV-resistant, mainly for optical applications.
POM Polyoxymethylene	High impact resistance, good mechanical strength. Good chemical resistance.
PP Polypropylene	Very good electrical properties. Impact resistant, tough, mechanically resilient. Very low water uptake. Good to very good chemical resistance.
PPE Polyphenylene ether	Tough, inflexible, high mechanical strength over a wide temperature range. Good chemical resistance. Good hot water resistance.
PSU Polysulfone	High temperature resistance, high impact resistance, good chemical resistance, FDA approved (food grade).
PTFE Polytetrafluoroethylene	Best temperature and chemical resistance, FDA approved (food grade).
PUR Polyurethane	Elastic, abrasion-resistant, impact-resistant. Good resistance to oils, greases, solvents (used for gaskets and cable jackets).
PVC Polyvinyl chloride	Good mechanical strength and chemical resistance (cable).
PVDF Polyvinylidene fluoride	Thermoplastic. High mechanical strength and temperature resistance. Good chemical resistance (similar to PTFE).

Material	Use and characteristics
METAL	
Al Wrought aluminum alloy	Standard-aluminum for machined cutting. Can be anodized. Material for housings and mounting components.
CuZn Brass	Standard-housing material with surface protection.
Stainless steel	Excellent corrosion resistance and strength. Quality 1.4034, 1.4104: Standard-material; quality 1.4305, 1.4301: Standard-material for the food industry; quality 1.4401, 1.4404, 1.4571: With increased requirements on chemical resistance at elevated temperatures for the food industry.
GD-Al die-cast-aluminum	Low specific gravity. Good strength and resistance. Some types can be anodized.
GD-Zn die-cast-zinc	Good resistance and strength. Usually with protective surface coating.
OTHER	
Glass	Good chemical resistance and strength. Used primarily in optical applications (lenses, cover lenses).
Ceramic	Very good strength and chemical resistance. Electrically insulating. Excellent temperature resistance.

Alphanumeric Index

SORTED BY ORDERING CODE

BAE000E	BAE LX-VS-HR025	565
BAE00AM	BAE LX-VS-DR090	563
BAE00AN	BAE LX-VS-RW100	573
BAE00C5	BAE LX-VS-HR150	567
BAE00E1	BTL7-A-CB02-S115	557
BAE00E5	BAE PD-US-004-S04	543
BAE00E6	BAE PD-US-004-S92	543
BAE00EC	BTL7-A-CB02-S32	557
BAE00EF	BTL7-A-CB02-K	557
BAE000F	BAE LX-VS-HR050	567
BAE00FR	BAE LX-VS-HI100	565
BAE000H	BAE LX-VS-HR100	567
BAE00H0	BAE LX-VS-SR018	585
BAE00H1	BAE LX-VS-SI018	585
BAE000J	BAE LX-VS-RR100	573
BAE00J9	BAE LX-VS-OR50	581
BAE00JA	BAE LX-VS-OR100	581
BAE00JC	BAE LX-VS-HR200	567
BAE00JE	BAE LX-VS-HI200	565
BAE00JF	BAE LX-VS-HR100-E	567
BAE000K	BAE LX-VS-RI100	573
BAE00KF	BAE LX-VS-SR012	585
BAE00KP	BAE LX-VS-HI150	565
BAE00KR	BAE LX-VS-HI050	565
BAE00MR	BAE PD-US-007-S92	543
BAE00MU	BAE LX-VS-HR300	567
BAE00NT	BAE LX-VS-LR100-S26	577
BAE00NU	BAE LX-VS-LI100-S26	577
BAE00NW	BAE LX-VS-LW100-S26	577
BAE00NY	BAE LX-VS-LR200-S26	577
BAE00NZ	BAE LX-VS-LI200-S26	577
BAE00P0	BAE LX-VS-LW200-S26	577
BAE00W8	BAE LX-XA-BW0170-S4	593
BAE00W9	BAE LX-XA-BW0278-S4	593
BAE00WA	BAE LX-XA-BW0332-S4	593
BAE00WM	BAE LX-VS-HI300	565
BAE00Y4	BAE LX-XA-BW0530-S4	593
BAE00Y5	BAE LX-XA-BW0710-S4	595
BAE00Y6	BAE LX-XA-BW1016-S4	595
BAE00ZM	BAE LX-XA-BW0380A-S4	593
BAE00ZN	BAE LX-XA-BW0560A-S4	595
BAE00ZP	BAE LX-XA-BW0760A-S4	595
BAE00ZR	BAE LX-XA-BW0960A-S4	595
BAE00ZT	BAE LX-XA-BW1160A-S4	595
BAE00ZU	BAE SA-XE-051-XR	619
BAE00ZW	BAE SA-XE-053-XR	619
BAE00ZY	BAE SA-XE-052-XR	619
BAE002E	BOS S-C01	611
BAE002H	BOS S-F01	613
BAE002J	BOS S-F02	613
BAE002K	BOS S-M01	613
BAE002L	BOS S-M02	613
BAE002M	BOS S-T01	613
BAE002N	BOS S-T02	613
BAE010A	BAE LX-XO-PL018-E-C1-S103	589
BAE011E	BAE LX-XA-BW0170A-S4	593
BAE011K	BAE LX-VS-SI030A	585
BAE011L	BAE LX-VS-SR030A	585
BAE011M	BAE LX-VS-SW030A	585
BAE0070	BES 516-615-PS-1-PU-05	605
BAE0073	BES 516-IV 2	611
BAE0104	BAE LX-XO-PL018-E-L1-S103	589
BAE0106	BAE LX-XO-PL018-E-L3-S103	589
BAE0107	BAE LX-XO-PL018-E-L7-S103	589
BAE0108	BAE LX-XO-PL018-E-L8-S103	589
BAE0109	BAE LX-XO-PL018-E-P1-S103	589
BAM00AE	BES 08,0-KH-2L	455
BAM00A0	BES 08-SM-1F	405
BAM00A2	BES 08,0-BS-1	469
BAM00A4	BES 08,0-KB-10/W	473
BAM00A5	BES 08,0-KB-3	473
BAM00A6	BES 08,0-KB-3-F	473
BAM00AA	BES 08,0-KB-7	473
BAM00AH	BES 08,0-KH-2S	455
BAM00AK	BES 08,0-KH-2S/W	455
BAM00AL	BES 08,0-KH-3L	455
BAM00AR	BES 08,0-KH-6S	455
BAM00AW	BES 08,1-KB-4-F	473
BAM00AZ	BES 12-FA-70	391
BAM00C0	BES 12-HW-1	477
BAM00C2	BES 12-SM-2	405
BAM00C4	BES 12,0-BS-1	469
BAM00C6	BES 12,0-KB-10/W	473
BAM00C7	BES 12,0-KB-2	473
BAM00C9	BES 12,0-KB-3	475
BAM00CA	BES 12,0-KB-3-F	475
BAM00CF	BES 12,0-KB-4-F	475
BAM00CY	BES 12,0-KH-2L	455
BAM00CZ	BES 12,0-KH-2L/W	455
BAM000E	BFO CT	543
BAM00E0	BES 12,0-KH-2S	457
BAM00E1	BES 12,0-KH-2S/W	457
BAM00E2	BES 12,0-KH-3L	457
BAM00EK	BES 12.0-KB-9S	475
BAM00EM	BES 14,5-BS-1	469
BAM00EP	BES 16-SM-2	405
BAM00ET	BES 16,0-BS-1	469
BAM00EY	BES 18-HW-1	477
BAM00EZ	BES 18-SM-1	405
BAM00F0	BES 18-SM-2	405
BAM00F1	BES 18-SM-3	405
BAM00F2	BES 18,0-BS-1	469
BAM00F3	BES 18,0-BS-2	469
BAM00F5	BES 18,0-KB-10/W	475
BAM00F7	BES 18,0-KB-3	475
BAM00F8	BES 18,0-KB-3-F	475
BAM00FC	BES 18,0-KB-4-F	475
BAM00FE	BES 18,0-KB-5-F	475
BAM00FN	BES 18,0-KH-2L	457
BAM00FP	BES 18,0-KH-2L/W	457

BAM00FR	BES 18,0-KH-2M	457
BAM00FT	BES 18,0-KH-2S	457
BAM00FW	BES 18,0-KH-2S/W	457
BAM00FY	BES 18,0-KH-3L	457
BAM00H7	BES 20,0-BS-1	469
BAM00H8	BES 22-SM-2	405
BAM00HH	BES 30-HW-1	477
BAM00HJ	BES 30-SM-1	405
BAM00HK	BES 30-SM-2	405
BAM00HL	BES 30-SM-3	407
BAM00HM	BES 30-SM-5	407
BAM00HN	BES 30,0-BS-1	469
BAM00HR	BES 30,0-KB-10/W	475
BAM00HU	BES 30,0-KB-3-F	475
BAM00HW	BES 30,0-KB-4-F	475
BAM00HY	BES 30,0-KB-5-F	475
BAM000J	BFO D10-LA-DC-10	351
BAM00J4	BES 30,0-KH-2L	459
BAM00J5	BES 30,0-KH-2L/W	459
BAM00J6	BES 30,0-KH-2S	459
BAM00J7	BES 30,0-KH-2S/W	459
BAM00JL	BES 36-SM-2	407
BAM00JW	BES Q40-HW-1	471
BAM00JY	BES Q40-HW-2	471
BAM00JZ	BES Q40-HW-3	471
BAM00K3	BES R04-MF-01	471
BAM00K9	BMF 103-HW-42	525
BAM00KA	BMF 103-HW-43	525
BAM00KN	BMF 103-HW-85	525
BAM00KR	BMF 10E-HW-19	527
BAM00KZ	BMF 303-HW-28	525
BAM00L0	BMF 303-HW-30	525
BAM00L1	BMF 303-HW-31	525
BAM00L2	BMF 303-HW-33	525
BAM00L4	BMF 303-HW-40	525
BAM00L6	BMF 303-HW-51	525
BAM00L7	BMF 303-HW-59	525
BAM00L8	BMF 303-HW-60	525
BAM00LE	BMF 303-HW-69	525
BAM00LF	BMF 303-HW-80	525
BAM00LJ	BMF 305-HW-20	527
BAM00LP	BMF 305-HW-24	527
BAM00LT	BMF 305-HW-26	527
BAM00LU	BMF 305-HW-27	527
BAM00LW	BMF 305-HW-32	527
BAM00NJ	BES Q08-KH-2	477
BAM00NM	ADAPTER BFO 30-A1	351
BAM00NN	BFO 02-PK-1	365
BAM00NP	BFO 02-UK-1	369
BAM00NR	BFO 04-FL-1	367
BAM00NT	BFO 04-FL-2	367
BAM00NU	BFO 04-FS-1	425
BAM00NW	BFO 04-PK-1	367
BAM00P0	BFO 08,0-KB-1	471
BAM00P0	BFO 08,0-KB-1	351
BAM00P1	BFO D13-LA-EC-10	351
BAM00P2	BKT M-PK-4	367
BAM00P3	BKT M-PK-5	367
BAM00PT	BOS 11-HW-1	513
BAM00PW	BOS 12-BL-1	351
BAM00PY	BOS 12-LT-1	413
BAM00R0	BOS 12-WS-1	369
BAM00R1	BOS 12-WS-2	369
BAM00R6	BOS 18-BL-1	353
BAM00R7	BOS 18-BL-2	353
BAM00R9	BOS 18-LT-1	413
BAM00RL	BOS 18-SM-1	415
BAM00RP	BOS 18-UK-1	369
BAM00RR	BOS 18-UK-10	369
BAM00RT	BOS 18-UK-2	369
BAM00RU	BOS 18-WS-1	369
BAM00RY	BOS 18,0-HW-1	513
BAM000T	BAM MC-XA-002-D03,0-2	465
BAM00T0	BOS 18,0-HW-3	512
BAM00T2	BOS 18,0-HW-6	512
BAM00T3	BOS 18,0-KB-1	475
BAM00T4	BOS 2-HW-1	512
BAM00T5	BOS 2-HW-2	512
BAM00T6	BOS 2-HW-3	512
BAM00T7	BOS 21-AD-1	514
BAM00T9	BOS 21-HW-1	514
BAM00TA	BOS 21-HW-2	514
BAM00TK	BOS 26-HW-1	517
BAM00TN	BOS 30,0-KB-1	475
BAM00TU	BOS 5-BL-1	353
BAM00TW	BOS 5-BL-2	353
BAM00TY	BOS 5-BL-3	353
BAM00TZ	BOS 5-BL-4	353
BAM000U	BAM MC-XA-002-D04,0-2	465
BAM00U0	BOS 5-BL-5	353
BAM00U1	BOS 5-BL-6	353
BAM00U2	BOS 5-BL-7	355
BAM00U3	BOS 5-BL-8	355
BAM00U4	BOS 5-BL-9	355
BAM00U5	BOS 5-HW-1	512
BAM00U6	BOS 5-HW-2	512
BAM00U7	BOS 5-HW-3	515
BAM00U8	BOS 5-HW-4	517
BAM00U9	BOS 5-HW-5	517
BAM00UA	BOS 5-HW-6	517
BAM00UF	BOS 5-HW-9	515
BAM00UH	BOS 6-HW-1	514
BAM00UK	BOS R-1	341
BAM00UL	BOS R-11	339
BAM00UN	BOS R-13	333
BAM00UM	BOS R-12	333
BAM00UP	BOS R-14	341
BAM00UR	BOS R-15	343
BAM00UT	BOS R-16	335
BAM00UW	BOS R-2	343
BAM00UY	BOS R-22	333
BAM000W	BAM MC-XA-002-D06,5-2	465
BAM00W4	BOS R-3	343
BAM00W6	BOS R-32-0,40	335
BAM00W7	BOS R-33	339
BAM00W8	BOS R-34	339
BAM00W9	BOS R-35	335
BAM00WA	BOS R-5	341
BAM00WC	BOS R-6-0,25	337
BAM00WE	BOS R-6-45	337
BAM00WF	BOS R-7-0,25	337
BAM00WH	BOS R-7-22	337
BAM00WJ	BOS R-8-0,25	337
BAM00WK	BOS R-8-22	337
BAM00WL	BOS R-9	341
BAM00WN	BVS Z-MB-01	493
BAM000Y	BAM MC-XA-002-D08,0-2	465
BAM00ZL	BAM TO-CC-001-M3-0,4/8,0	543
BAM00ZN	BAM TO-CC-001-A3-1,5/24,0	543
BAM01A2	BTL-S-3112-4Z	551
BAM01A7	BAM OF-VS-001-D-RX100	361
BAM01AC	BAM MB-XA-003-B03-1	493
BAM01AE	BAM MB-XA-002-B02-1	493
BAM01AU	BES Q08-KH-3	477
BAM01AW	BMS CS-M-D12-B23K-05	439
BAM01AY	BMS CS-M-D12-BX07-06	441

BAM01AZ	BAM FS-XE-001-M5-4	393
BAM01C0	BAM FS-XE-002-D4-4	393
BAM01C1	BAM CS-XA-001-M8-C	417
BAM01C2	BAM CS-XA-002-M12-A	417
BAM01C4	BMF 305-HW-92	527
BAM01CF	BOS R-40	333
BAM01CH	BMS CU-M-D12-I060-02	433
BAM01CM	BOS R-36	339
BAM01CW	BMS CS-M-D12-BX08-07	435
BAM01EP	BAM BD-US-001-D20-4	371
BAM01ER	BAM BD-US-001-D32-4	371
BAM01ET	BAM AP-US-001-M12-O	369
BAM01EY	BMF 305-HW-99	527
BAM01EZ	BMF 305-HW-98	527
BAM01F0	BMF 303-HW-97	527
BAM01F2	BMS CS-M-D12-BX11-09	441
BAM01F3	BMS CS-M-D12-BX10-08	441
BAM01FC	BTL5-T-2814-1S	547
BAM01FK	BAM MB-XO-006-B05-4	514
BAM01FM	BAM MB-XO-007-B05-4	514
BAM01FT	BIS Z-HW-002	497
BAM01H6	BOS R-31	343
BAM01H7	BOS R-38	335
BAM01H9	BOS R-41	333
BAM01HA	BOS R-42	335
BAM01HC	BOS R-43	335
BAM01HE	BOS R-44	339
BAM01HF	BOS R-45	333
BAM01HJ	BAM AP-US-002-M18-O	371
BAM01HJ	BAM AP-US-002-M18-O	557
BAM01HL	BIS U-500-EF-01	121
BAM01HM	BIS U-500-EF-02	121
BAM01HN	BIS U-500-EF-05	121
BAM01HP	BIS U-500-EF-10	121
BAM01JK	BIS Z-HW-003	497
BAM01JM	BOS R-50	335
BAM01JN	BOS R-47	341
BAM01JP	BOS R-46	339
BAM01JT	BAM IA-XA-003-4x5-Y	557
BAM01K6	BMF 103-HW-100	525
BAM01K7	BMF 103-HW-102	525
BAM01K8	BMF 305-HW-106	527
BAM01K9	BMF 303-HW-101	525
BAM01KA	BTL-S-3112-4Z-SA10	551
BAM01KM	BOS 12,0-KB-1	475
BAM01KN	BIS Z-HW-004	497
BAM01L8	BAM PC-XO-006-23K-1	415
BAM01LA	BOS R-48	341
BAM01LE	BAM CS-XA-004-U7/8-A	413
BAM01LF	BAM CS-XA-005-U7/8-A	413
BAM01LJ	BAM PC-US-007-M18-2/W	413
BAM01LW	BIS Z-SP-003	497
BAM01M9	BMF 235-HW-109	527
BAM01MA	BMF 235-HW-110	527
BAM01MC	BMF 235-HW-111	527
BAM01MY	BAM MB-XA-010-B07-4	497
BAM01N3	BTL6-A-MF07-A-PF/M5	533
BAM01NC	BAM PC-XO-005-18M-4	415
BAM01NH	BOS R-49	341
BAM01R2	BAM PT-XA-002-127-2-30	385
BAM01RR	BAM PC-VS-008-1	415
BAM01TK	BMS CS-M-D12-IX13-01	493
BAM01TM	BAM MC-XA-016-Q40-1	471
BAM01U0	BAM MC-XA-017-D30,0-1	469
BAM01U2	BAM LS-FO-002-F	365
BAM01UL	BMS CS-M-D12-IX14-01	441
BAM01UT	BAM MC-XA-020-D12,0-2-FS/W	455
BAM01UY	BAM PT-XA-002-190-2-30	385
BAM01W3	BAM MC-XA-021-M12-2	537
BAM01W4	BAM MC-XA-021-M18-2	537
BAM01W5	BAM MC-XA-021-M30-2	537
BAM01W6	BAM MC-XA-021-M16-2	537
BAM01WF	BAM MC-XA-021-M5-4	537
BAM01WH	BAM MC-XA-021-M12-4	537
BAM01WJ	BAM MC-XA-021-M18-4	537
BAM01WK	BAM MC-XA-021-M30-4	537
BAM01WL	BAM MC-XA-021-M18-A	537
BAM01WM	BAM MC-XA-021-M30-A	537
BAM01WN	BIS U-500-EF-15	121
BAM01WP	BIS U-500-EF-20	123
BAM01WR	BAM MC-XA-021-M8-3	537
BAM01Y3	BAM MC-XA-018-B04-4	497
BAM01Y5	BAM PC-XO-005-08M-4	415
BAM01Y6	BAM PC-XO-005-12M-4	415
BAM01Y9	BMF 307-HW-112	527
BAM01YL	BAM PC-XO-006-23K-G/RK	415
BAM01YN	BAM CS-XA-008-M12-4	413
BAM01YP	BMS CS-M-S25-DX15-00	493
BAM01YR	BIS U-500-EF-03	121
BAM01YT	BMS CUJ-M-S25-D045-00	493
BAM01YU	BAM AP-US-004-R06-Y	371
BAM01YW	BAM MB-XA-013-Q08-4	512
BAM02E3	BAM PT-XA-006-M91-T-00,9	385
BAM02FA	BAM LS-VS-004-C2/3-0814-2	355
BAM02FC	BAM LS-VS-004-C2/3-1214-2	355
BAM02FE	BAM LS-VS-004-C2/3-1614-2	355
BAM02FF	BAM LS-VS-004-C2/3-2514-2	357
BAM02FH	BAM LS-VS-004-C2/3-3514-2	357
BAM02FJ	BAM LS-VS-004-C2/3-5014-2	357
BAM02FK	BAM OF-VS-002-PL-27	363
BAM02FL	BAM OF-VS-002-UV-27	365
BAM02FM	BAM OF-VS-002-RD-27	363
BAM02FN	BAM OF-VS-002-YE-27	365
BAM02FP	BAM OF-VS-002-GN-27	361
BAM02FR	BAM OF-VS-002-BU-27	361
BAM02FT	BAM OF-VS-002-PL-30	363
BAM02FU	BAM OF-VS-002-UV-30	365
BAM02FW	BAM OF-VS-002-RD-30	363
BAM02FY	BAM OF-VS-002-GN-30	361
BAM02FZ	BAM OF-VS-002-BU-30	361
BAM02H0	BAM OF-VS-002-PL-40	363
BAM02H1	BAM OF-VS-002-UV-40	365
BAM02H4	BAM PC-OS-025-50K-1	415
BAM02HE	BAM MB-XA-021-B12-4	513
BAM02HF	BAM MB-XA-022-B12-4	513
BAM002J	BMS CU-P-D12-A040-00	431
BAM02J9	BAM MD-VS-002-0002	493
BAM02JA	BAM MD-VS-002-0003	493
BAM02JC	BAM MD-VS-002-0004	493
BAM02JE	BES 08-FA-17	391
BAM02JT	BMS CU-M-D12-B040-02	431
BAM02JU	BAM TG-AM-015-003	397
BAM02JW	BAM TG-AM-015-004	397
BAM02JY	BAM TG-AM-015-005	397
BAM002K	BMS CS-P-D12-AD08-00	441
BAM02KL	BMS CS-M-D12-B64K-12	517
BAM02KM	BAM CS-XA-001-M12-5	405
BAM002L	BMS CR-P-D12-AU-00	439
BAM002M	BMS CC-P-D12-A-00	435
BAM02M5	BAM MB-XA-025-D19,0-1	489
BAM02ML	BAM MC-XA-042-D20,0-1	493
BAM02MN	BAM OF-VS-002-IR-27	363
BAM02MP	BAM OF-VS-002-IR-30	363
BAM02MR	BAM OF-VS-002-IR-40	363
BAM02MT	BAM SP-XO-002-0,5-40-31-A	361
BAM02MZ	BAM MC-LG-037-B07-3	505

BAM002N	BMS CS-P-D12-AD12-00	443
BAM02N0	BAM MC-LG-038-B07-01-3	505
BAM02N1	BAM MC-LG-038-B07-02-3	505
BAM02N2	BAM MC-LG-036-T01-3	505
BAM02N3	BAM MC-LG-040-B08-3	507
BAM02N4	BAM MC-LG-041-B07-3-S	507
BAM02N5	BAM MC-LG-041-B07-3-L	507
BAM02N6	BAM IA-XA-017-01	505
BAM02N7	BAM IA-XA-017-02	505
BAM02NA	BAM PC-VS-023-1	413
BAM02NC	BAM MB-LG-023-B13-3	505
BAM02NE	BAM MB-LG-024-0600-1	505
BAM02NF	BAM MB-LG-024-1000-1	505
BAM02NH	BAM MB-LG-024-1200-1	505
BAM02NJ	BAM MB-LG-024-1650-1	505
BAM02NK	BAM MB-LG-024-1900-1	505
BAM02NM	BAM BD-LG-003-0900	505
BAM02NN	BAM BD-LG-003-1200	505
BAM02NP	BAM BD-LG-003-1650	505
BAM02NR	BAM BD-LG-003-1900	505
BAM002P	BMS CS-P-D12-AD18-00	443
BAM02P1	BAM MC-CS-043-R08-R-01	465
BAM02P2	BAM MC-CS-043-R08-R-02	465
BAM02P7	BAM MB-VS-026-B14-1	493
BAM02P9	BAM TO-LG-011-14	507
BAM02PA	BAM TO-LG-011-30	507
BAM02PM	BOS 6-BL-1	355
BAM02PN	BAM MB-XA-027-B15-4	497
BAM002R	BMS RS-M-D12-0150-00	435
BAM02R3	BOS R-60-22	337
BAM02R5	BAM PC-XE-028-M8-9	405
BAM02R6	BAM PC-XE-028-M12-9	405
BAM02R7	BAM PC-XE-028-M18-9	405
BAM02R8	BAM PC-XE-028-M30-9	405
BAM02RY	BAM TO-XA-013-01	543
BAM002T	BMS RS-M-D12-0250-00	435
BAM02TU	BAM CS-XA-001-M12-2	407
BAM002U	BMS RS-M-D12-1000-00	435
BAM02UE	BAM MC-XA-014-Q08-2	477
BAM02UY	BAM MB-XO-028-B37-3	513
BAM02W0	BAM PC-VS-023-1-01	413
BAM02WA	BAM MB-XE-031-Q40-A	471
BAM02WF	BAM PC-XE-034-Q40-1	413
BAM002Y	BMS CUJ-P-D12-R040-00	433
BAM02Y3	BAM LS-VS-004-C2/3-7532-2	357
BAM02Y5	BAM MB-XA-029-D30,0-5	471
BAM02Y8	BAM MD-VS-002-0005	493
BAM02Y9	BAM MD-VS-002-0006	493
BAM02YU	BAM TG-AM-015-006	397
BAM002Z	BMS CC-M-D12-B-00	433
BAM02ZE	BAM MB-XO-032-B16-1-BR2	514
BAM02ZU	BMS CU-M-S25-D030-01	493
BAM02ZW	BAM MB-MS-038-B19-1	493
BAM003A	BMS BS-M-D12-0250-01	437
BAM03AK	BAM IA-XA-033-01-R	433
BAM03AL	BAM IA-XA-033-02-R	433
BAM03AM	BAM IA-XA-033-03-R	433
BAM03AN	BAM IA-XA-033-04-R	433
BAM003C	BMS CS-M-D12-BX05-02	439
BAM03CF	BAM IA-XA-034-M08-A-4	433
BAM03CH	BAM IA-XA-034-M12-A-5	433
BAM003E	BMS AD-M-002-D12/D12	517
BAM03EU	BMS CU-M-D12-E038-01	431
BAM03EW	BMS CU-M-D12-E038-02	431
BAM03EY	BMS CC-M-D12-E-01	435
BAM003F	BMS BS-M-D12-0250-03	439
BAM03F0	BMS RS-S-D12-0400-00	437
BAM03F1	BMS RS-S-D12-0600-00	437
BAM03F2	BMS RS-S-D12-0800-00	437
BAM003H	BMS BS-M-D12-0400-04	439
BAM03H1	BAM LS-VS-008-C2/3-0528-5	357
BAM03H2	BAM LS-VS-008-C2/3-0814-5	357
BAM03H3	BAM LS-VS-008-C2/3-1214-5	357
BAM03H4	BAM LS-VS-008-C2/3-1614-5	357
BAM03H5	BAM LS-VS-008-C2/3-2514-5	359
BAM03H6	BAM LS-VS-008-C2/3-3520-5	359
BAM03H7	BAM LS-VS-008-C2/3-5028-5	359
BAM003J	BMS AD-M-003-D12/IZ	437
BAM003K	BMS CS-M-D12-ID16-01	441
BAM003L	BMS CS-M-D12-ID24-01	441
BAM003M	BMS CS-M-D12-ID36-01	441
BAM03MN	BAM LS-VS-009-C1/1-0625-O	359
BAM03MP	BAM LS-VS-009-C1/1-0825-O	359
BAM03MR	BAM LS-VS-009-C1/1-1218-O	359
BAM03MT	BAM LS-VS-009-C1/1-1618-O	359
BAM03MU	BAM LS-VS-009-C1/1-2518-O	359
BAM03MW	BAM LS-VS-009-C1/1-3518-O	361
BAM03MY	BAM LS-VS-009-C1/1-5018-O	361
BAM003N	BMS CR-M-D12-IU-05	437
BAM003P	BMS CS-M-D12-IQ40-02	441
BAM003R	BMS CS-M-D12-IQ40-03	441
BAM003T	BMS CASE-01	435
BAM003U	BMS CC-P-D10-A-00	435
BAM003W	BMS KIT-V1	435
BAM003Y	BMS CS-M-D12-IZ-01	433
BAM009A	BES 06,5-BS-1	469
BAM009C	BES 06,5-KB-1	473
BAM009E	BES 06,5-KB-3	473
BAM009F	BES 06,5-KB-7	473
BAM009K	BES 08-DM-1	537
BAM009L	BES 08-FA-49	391
BAM009M	BES 08-FA-89	391
BAM009N	BES 08-FA-BS-4,0-G	391
BAM009P	BES 08-FA-BS-4,0-W	391
BAM009R	BES 08-FA-BS-8,0-G	391
BAM009T	BES 08-FA-BS-8,0-W	391
BAM009U	BES 08-HW-1	477
BAM009Z	BES 08-SM-1	405
BAM010W	BTL6-A-MF01-A-43	533
BAM010Y	BTL6-A-MF01-A-50	533
BAM012A	BIS C-300-HG1	499
BAM012E	BIS C-108-MF-01	497
BAM012H	BIS L-203-ZH1	497
BAM012J	BIS Z-HG-002	499
BAM012K	BIS Z-HG-003	499
BAM012L	BIS Z-HW-001	497
BAM012M	BIS Z-MP-001	497
BAM012N	BIS Z-ZA-001	499
BAM012P	BKS-23-CS-00	405
BAM012T	BKS-7/8-CS-00-A	417
BAM013H	BTL-P-0814-GR-PAF	551
BAM013J	BTL-P-1012-4R	551
BAM013K	BTL-P-1012-4R-PA	553
BAM013L	BTL-P-1013-4R	553
BAM013M	BTL-P-1013-4R-PA	553
BAM013P	BTL-P-1013-4S	553
BAM013R	BTL-P-1014-2R	553
BAM013Y	BTL-P-1028-15R	553
BAM014A	BTL2-S-5113-4K-EX	551
BAM014C	BTL2-S-6216-8P	551
BAM014E	BTL2-S-6216-8P-EX	551
BAM014H	BTL5-F-2814-1S	547
BAM014K	BTL5-M-2814-1S	547
BAM014L	BTL5-N-2814-1S	547
BAM014M	BTL5-P-3800-2	547
BAM014P	BTL5-P-4500-1	547

BAM014T	BTL5-P-5500-2	547
BAM014W	BTL6-A-3800-2	547
BAM014Z	BTL6-A-3801-2	547
BAM015A	BES 516-MB-18	471
BAM015C	BES 516-MB-30	473
BAM015U	BESA-08-CM	425
BAM015W	BESA-12-CM	425
BAM015Y	BESA-18-CM	425
BAM015Z	BESA-30-CM	425
BAM017E	BKS-PT-07/16-SI-15	385
BAM017H	BKS-PT-10/16-SI-15	385
BAM017L	BKS-PT-13/16-SI-15	387
BAM017N	BKS-PT-16/16-SI-15	387
BAM017R	BKS-PT-19/16-SI-15	387
BAM017U	BKS-PT-38/16-SI-07.5	387
BAM017Z	BKS-PT-50/16-SI-07.5	387
BAM019W	BAM FS-XE-004-M8-4	393
BAM019Y	BAM FS-XE-003-M5-4	393
BAM020P	BAM LS-FO-003-M6-L	365
BAM020R	BIS Z-SP-004	497
BAM021E	BAM PT-XA-005-260-T-R20	385
BAM021F	BAM PT-XA-005-510-T-R20	385
BAM021T	BMS RS-M-D12-0200-00	435
BAM021U	BMS RS-M-D12-0750-00	435
BAM021W	BMS RS-M-D12-0300-00	435
BAM021Y	BMS RS-M-D12-0100-00	435
BAM022A	BAM MC-XO-030-6K-4	515
BAM022K	BAM MC-XA-023-D18,0-2-FS	457
BAM022L	BAM MC-XA-023-D18,0-2-FL	457
BAM022M	BAM MC-XA-024-D18,0-2-FM/W	457
BAM022W	BAM FS-XE-005-M8-2-01R	399
BAM022Z	BAM PT-XA-002-100-2-R15	385
BAM023T	BOS R-55	333
BAM023U	BOS R-56	333
BAM024C	BAM MC-XA-023-D30,0-2-FXL/W	457
BAM024E	BAM MC-XA-024-D12,0-2-FM/W	455
BAM024F	BAM MC-XA-024-D12,0-2-FXL/W	455
BAM024H	BAM MC-XA-024-D30,0-2-FM/W	457
BAM024J	BTL2-S-3212-4Z	551
BAM024P	BMS CU-M-D12-B028-00	431
BAM024R	BMS CCJ-M-D12-B-01	431
BAM024T	BMS CS-M-D12-BZ	441
BAM024W	BAM PC-VS-017-1	413
BAM025T	BAM TG-AM-015-001	397
BAM025U	BAM FS-XE-005-M8-2-01P	399
BAM025W	BAM FS-XE-005-M8-2-01F	399
BAM026J	BAM MC-XA-032-Q40-1	471
BAM026K	BAM MB-NI-017-100-1	489
BAM026L	BAM MB-NI-017-400-1	489
BAM027E	BAM MC-XO-034-23K-4	517
BAM027T	BAM TG-AM-015-002	399
BAM029C	BAM PC-OS-024-50K-1	415
BAM029K	BAM PC-OS-026-23K-1	415
BAM029L	BAM PC-OS-024-23K-1	413
BAM029M	BAM PC-OS-025-23K-1	415
BAM029N	BAM AN-AM-001-01-1	413
BAM029P	BAM PC-OS-026-50K-1	415
BAM029R	BAM LS-VS-004-C2/3-0614-2	355
BAM030N	BAM LS-FO-005-U1-22	365
BAM0031	BMS CS-M-D12-IZ	433
BAM0032	BMS CS-M-D12-ID18-01	441
BAM032T	BAM IA-XA-031-200-R	433
BAM032U	BAM IA-MS-030-A5	557
BAM032W	BAM IA-XA-023-01	557
BAM0033	BMS CS-M-D12-ID30-01	441
BAM033A	BAM MC-XA-021-M8-4-01	537
BAM033K	BMS AD-M-004-X19/MIS-D	431
BAM033L	BAM TO-CC-001-M4-0,6/12,0/18,0	543
BAM033T	BMS BS-M-D12-0250-05	437
BAM033U	BMS CU-M-D30-E040-00	431
BAM033W	BMS CC-M-D30-E-00	435
BAM033Y	BMS CC-M-D30-E-01	435
BAM033Z	BMS RS-M-D30-0300-01	437
BAM0034	BMS CR-M-D12-IU-02	437
BAM034A	BAM MC-XA-049-D30,0-5	465
BAM034C	BAM MB-NI-017-250-1	489
BAM034K	BMS CUJ-M-D30-E057-00	431
BAM034L	BMS CUJ-M-D30-E060-01	431
BAM034N	BAM MB-XE-031-Q40-A-01	471
BAM0035	BMS CR-M-D12-IS-03	437
BAM035A	BMS CS-M-D30-BZ-03	433
BAM035N	BMS CS-M-D12-IZ-02	433
BAM035P	BMS CC-M-D12-B-03	433
BAM035Y	BAM FS-AM-011-D45,0-4	469
BAM035Z	BAM MC-XE-052-D45,0-1	471
BAM0036	BMS CS-M-D12-ID08-01	441
BAM0037	BMS CS-M-D12-ID12-01	441
BAM037F	BMS AD-M-005-D12/X01	513
BAM037H	BMS AD-M-005-D12/X02	513
BAM037R	BMS AD-M-005-D12/X03	513
BAM037T	BAM MC-XA-054-D02,0-4	465
BAM037U	BAM MC-XA-054-D03,0-4	465
BAM037W	BAM MC-XA-054-D04,0-4	465
BAM037Y	BAM MC-XA-054-D05,0-4	465
BAM0038	BMS AD-M-002-D12/D18	517
BAM0039	BMS BS-M-D12-0250-02	439
BAM0040	BMS CS-M-D12-BX06-03	439
BAM0041	BMS CZ-M-D12-I-001	437
BAM0042	BMS CR-M-D12-IS-04	437
BAM0043	BMS CS-M-D12-B21K-04	439
BAM0044	BMS CU-M-D12-I060-01	433
BAM0045	BMS RS-S-D12-0150-00	437
BAM0046	BMS RS-S-D12-0300-00	437
BAM0092	BES 03,0-KB-3	473
BAM0094	BES 04,0-KB-1	473
BAM0095	BES 04,0-KB-3	473
BAM0097	BES 05,0-KB-1	473
BAM0098	BES 05,0-KB-3	473
BAM0099	BES 05,0-KH-2S	455
BAM0110	BTL6-A-MF03-K-50	533
BAM0114	BKS-12-CS-01	417
BAM0115	BKS-12-CS-02	417
BAM0120	BKT M-PK-1	367
BAM0121	BKT M-PK-2	367
BAM0122	BKT M-PK-3	367
BAM0126	BOS R-10	341
BAM0127	BIS C-122-AD-1	497
BAM0128	BIS C-122-AD-2	497
BAM0146	BTL2-S-4414-4Z	551
BAM0147	BTL2-S-4414-4Z-EX	551
BAM0148	BTL2-S-4414-4Z01-EX	551
BAM0149	BTL2-S-5113-4K	551
BAM0158	BES 516-MB-08	471
BAM0159	BES 516-MB-12	471
BAM0182	BKS-PW-51/30-SI-TR-11	385
BAM0183	BKS-PW-26/20-SI-TR-03,5	385
BAM0206	BAM FK-VS-002-03-1	423
BAM0212	BAM PT-XA-004-070-T-R16	385
BAM0213	BAM PT-XA-004-100-T-R16	387
BAM0214	BAM PT-XA-004-130-T-R16	387
BAM0215	BAM PT-XA-004-160-T-R16	387
BAM0216	BAM PT-XA-004-190-T-R16	387
BAM0217	BAM PT-XA-004-500-T-R16	387
BAM0218	BAM MC-XA-027-D12,0-1	469
BAM0219	BAM MC-XA-027-D18,0-1	469
BAM0225	BAM MB-XO-014-B10-4-RRR	515

BAM0227	BAM MB-XO-014-B10-4-BLS	515
BAM0228	BAM MB-XO-014-B10-4-RLS	515
BAM0230	BAM PT-XA-002-130-2-R15	385
BAM0231	BAM PT-XA-002-190-2-R15	385
BAM0232	BAM PT-XA-002-380-2-R15	385
BAM0233	BAM PT-XA-002-500-2-R15	385
BAM0246	BAM MC-XA-023-D12,0-2-FS	455
BAM0247	BAM MC-XA-023-D12,0-2-FM/W	455
BAM0255	BAM MB-NI-016-800-1	489
BAM0260	BAM FS-XE-005-M8-2-01T	399
BAM0264	BAM MC-XA-023-D30,0-2-FS	457
BAM0265	BAM MC-XA-023-D30,0-2-FXL	457
BAM0269	BAM MC-XA-027-D08,0-1	469
BAM0270	BAM TG-ID-016-A01	557
BAM0271	BAM TG-ID-016-H01	557
BAM0272	BAM TG-ID-016-H02	557
BAM0275	BMS CU-M-D12-B040-00	431
BAM0277	BMS CS-M-D12-BX17-11	441
BAM0291	BAM TO-XA-009-A-0,7-2,0	543
BAM0304	BMS CS-M-D12-S6K-01	515
BAM0305	BMS CS-M-D12-S6K-03	514
BAM0306	BMS CS-M-D12-FX18-02	515
BAM0310	BAM MC-XA-023-D08,0-4-FS/W	455
BAM0313	BAM MC-XA-023-D08,0-2-FS	455
BAM0318	BAM MC-XA-023-D08,0-2-FXL/W	455
BAM0327	BAM MC-XA-027-D20,0-1	469
BAM0330	BAM RF-XO-025-S023/40-PM-AS	337
BAM0331	BAM RF-XO-026-S012/40-PM-AS	339
BAM0332	BAM RF-XO-027-S004/25-PM-AS	339
BAM0333	BAM RF-XO-030-S000/04-PM-FA	335
BAM0336	BIS Z-HW-008	497
BAM0337	BIS Z-HW-009	497
BAM0340	BMS RS-M-D30-0500-01	437
BAM0341	BMS RS-M-D30-1000-01	437
BAM0343	BMS CSJ-M-D30-EX19-02	435
BAM0349	BAM MC-XA-049-D18,0-5	465
BAM0360	BAM MC-XE-051-D45,0-3	471
BAM0377	BAM MC-XA-053-D20,0-1	469
BAM0379	BAM MC-XA-050-D45,0-1	471
BCC0A0A	BCC A315-0000-1A-R04	293
BCC0A03	BCC M438-0000-1A-000-51X850-000	233
BCC0A04	BCC M438-0000-2A-000-51X850-000	235
BCC0A05	BCC M43C-0000-1A-000-54XC25-000	237
BCC0A06	BCC M43C-0000-2A-000-54XC25-000	237
BCC0A7M	BCC A353-A353-30-RN036-000	257
BCC0A7N	BCC A355-A355-30-RN037-000	257
BCC0A08	BCC M415-0000-1A-R04	293
BCC0A09	BCC A315-0000-2A-R04	293
BCC0AA5	BCC A313-A313-A313-T0021-000	193
BCC0AA6	BCC A314-A314-A314-T0022-000	193
BCC0AA7	BCC A315-A315-A315-T0023-000	193
BCC0AT9	BCC A333-0000-10-000-61X3A5-000	201
BCC0ATA	BCC A333-0000-10-000-71X3A5-000	201
BCC0ATC	BCC A333-0000-20-000-61X3A5-000	201
BCC0ATE	BCC A333-0000-20-000-71X3A5-000	201
BCC0ATF	BCC A335-0000-20-000-81X5A5-000	209
BCC0ATH	BCC A335-0000-10-000-81X5A5-000	207
BCC0C6E	BCC M415-0000-1B-R01	293
BCC0CAE	BCC M455-0000-1A-RM020-020	269
BCC0CU2	BCC A353-0000-10-RN057-006	263
BCC0CU3	BCC A353-0000-10-RN057-020	263
BCC0CU4	BCC A353-0000-20-RN057-006	265
BCC0CU5	BCC A353-0000-20-RN057-020	265
BCC0CU6	BCC A354-0000-10-RN059-006	263
BCC0CU7	BCC A354-0000-10-RN059-020	263
BCC0CU9	BCC A354-0000-20-RN059-006	265
BCC0CUA	BCC A354-0000-20-RN059-020	265
BCC0CWL	BCC M454-0000-1A-RN053-006	271
BCC0CWM	BCC M454-0000-1A-RN053-020	271
BCC0CYC	BCC M458-0000-2A-RN056-006	277
BCC0CYE	BCC M458-0000-2A-RN056-020	277
BCC0CYK	BCC M458-0000-2A-RN066-020	277
BCC0CYN	BCC M455-0000-2A-RN054-006	277
BCC0CYP	BCC M455-0000-2A-RN054-020	277
BCC0CYR	BCC M455-0000-2A-RN063-006	275
BCC0CYT	BCC M455-0000-2A-RN063-020	275
BCC0CYY	BCC M458-0000-1A-RN056-006	273
BCC0CYZ	BCC M458-0000-1A-RN056-020	273
BCC0CZ0	BCC M454-0000-1A-RN060-006	271
BCC0CZ1	BCC M454-0000-1A-RN060-020	271
BCC0CZ2	BCC M454-0000-2A-RN053-006	277
BCC0CZ3	BCC M454-0000-2A-RN053-020	277
BCC0CZ4	BCC M454-0000-2A-RN060-006	275
BCC0CZ5	BCC M454-0000-2A-RN060-020	275
BCC0CZ6	BCC M455-0000-1A-RN054-006	273
BCC0CZ7	BCC M455-0000-1A-RN054-020	273
BCC0CZ8	BCC M455-0000-1A-RN063-006	271
BCC0CZ9	BCC M455-0000-1A-RN063-020	271
BCC0E1K	BCC M458-0000-1A-RN066-006	271
BCC0E1L	BCC M458-0000-1A-RN066-020	271
BCC0E1M	BCC M458-0000-2A-RN066-006	277
BCC0E2Z	BCC M354-0000-20-RM050-005	267
BCC0E4Y	BCC M353-0000-10-RM049-005	267
BCC0E4Z	BCC M353-0000-10-RM049-020	267
BCC0E5A	BCC M45C-0000-1A-RM081-020	269
BCC0E5C	BCC M45C-0000-2A-RM081-005	275
BCC0E5E	BCC M45C-0000-2A-RM081-020	275
BCC0E5F	BCC M455-0000-2A-RM014-020	273
BCC0E7N	BCC M333-0000-20-000-31X350-000-C027	213
BCC0E32	BCC M354-0000-20-RM050-020	267
BCC0E35	BCC M354-0000-10-RM050-005	267
BCC0E38	BCC M354-0000-10-RM050-020	267
BCC0E50	BCC M353-0000-20-RM049-005	267
BCC0E51	BCC M353-0000-20-RM049-020	267
BCC0E53	BCC M454-0000-2A-RM020-020	273
BCC0E54	BCC M455-0000-1A-RM014-020	269
BCC0E55	BCC M458-0000-1A-RM015-005	269
BCC0E56	BCC M458-0000-1A-RM015-020	269
BCC0E57	BCC M458-0000-2A-RM015-005	275
BCC0E58	BCC M458-0000-2A-RM015-020	275
BCC0E59	BCC M45C-0000-1A-RM081-005	269
BCC0E63	BCC A354-0000-10-RN010-006	263
BCC0E64	BCC A354-0000-20-RN010-006	265
BCC0F2T	BCC M415-M313-3F-RA101-000	287
BCC0F2U	BCC M415-M314-3F-RA102-000	287
BCC0F2Y	BCC M314-M414-3E-RA102-000	287
BCC0F4J	BCC HB75-0000-PA-121-VX85B5-020	119
BCC0F4K	BCC HB75-0000-PA-121-VX85B5-050	119
BCC0F4L	BCC HB75-0000-PA-121-VX85B5-100	119
BCC0F5C	BCC M314-M313-M313-U0056-000	193
BCC0F9M	BCC M434-0000-2A-000-45X450-000	219
BCC0F9N	BCC M435-0000-1A-000-45X450-000	225
BCC0F47	BCC M313-M413-3E-RA101-000	287
BCC0HAH	BCC M478-0000-2A-000-41X850-000	235
BCC0HKZ	BCC VA04-M415-3E-RA125-000	287
BCC0HLN	BCC M333-0000-10-000-13X325-000	209
BCC0HLP	BCC M333-0000-20-000-13X325-000	211
BCC0HLR	BCC M334-0000-10-000-13X425-000	213
BCC0HLT	BCC M334-0000-20-000-13X425-000	215
BCC0HLU	BCC M333-0000-10-000-13X350-000	209
BCC0HLW	BCC M333-0000-20-000-13X350-000	213
BCC0HLY	BCC M334-0000-10-000-13X450-000	215
BCC0HLZ	BCC M334-0000-20-000-13X450-000	217
BCC0HTL	BCC M478-0000-2X-000-E3X8T2-000	241
BCC0JRY	BCC S4B5-S4B4-3A-304-YX8434-006-C009	135
BCC0JRZ	BCC S4B5-S4B4-3A-304-YX8434-020-C009	135

BCC0JT0	BCC S4B5-S4B4-3A-304-YX8434-050-C009	135
BCC0JT1	BCC S4B5-S4B4-3A-304-YX8434-100-C009	137
BCC0JT2	BCC S4B5-S4B4-3A-304-YX8434-150-C009	137
BCC0JT3	BCC S4B5-S4B4-3A-304-YX8434-200-C009	137
BCC0JT4	BCC S4B5-S4B5-3A-313-YX8534-006-C009	139
BCC0JT5	BCC S4B5-S4B5-3A-313-YX8534-020-C009	141
BCC0JT6	BCC S4B5-S4B5-3A-313-YX8534-050-C009	141
BCC0JT7	BCC S4B5-S4B5-3A-313-YX8534-100-C009	141
BCC0JT8	BCC S4B5-S4B5-3A-313-YX8534-150-C009	141
BCC0JT9	BCC S4B5-S4B5-3A-313-YX8534-200-C009	141
BCC0JTP	BCC C3B4-C3B4-30-304-YX84A5-006-C009	137
BCC0JTR	BCC C3B4-C3B4-30-304-YX84A5-020-C009	137
BCC0JTT	BCC C3B4-C3B4-30-304-YX84A5-050-C009	137
BCC0JTU	BCC C3B4-C3B4-30-304-YX84A5-100-C009	139
BCC0JTW	BCC C3B4-C3B4-30-304-YX84A5-150-C009	139
BCC0JTY	BCC C3B4-C3B4-30-304-YX84A5-200-C009	139
BCC0JTZ	BCC C3B5-C3B5-30-335-YX85A5-006-C009	141
BCC0JU0	BCC C3B5-C3B5-30-335-YX85A5-020-C009	143
BCC0JU1	BCC C3B5-C3B5-30-335-YX85A5-050-C009	143
BCC0JU2	BCC C3B5-C3B5-30-335-YX85A5-100-C009	143
BCC0JU3	BCC C3B5-C3B5-30-335-YX85A5-150-C009	143
BCC0JU4	BCC C3B5-C3B5-30-335-YX85A5-200-C009	143
BCC0JW3	BCC S4B8-S4B8-3A-321-YX8825-006-C009	143
BCC0JW4	BCC S4B8-S4B8-3A-321-YX8825-020-C009	145
BCC0JW5	BCC S4B8-S4B8-3A-321-YX8825-050-C009	145
BCC0JW6	BCC S4B8-S4B8-3A-321-YX8825-100-C009	145
BCC0JW7	BCC S4B8-S4B8-3A-321-YX8825-150-C009	145
BCC0KL6	BCC Z032-0000-10-148-VS0CT4-050	119
BCC0KL7	BCC Z032-0000-10-148-VS0CT4-100	119
BCC0KL8	BCC Z032-0000-10-148-VS0CT4-200	119
BCC0KL9	BCC U0AA-U019-90-736-Z19004-010	145
BCC0KLA	BCC U0AA-U019-90-736-Z19004-030	145
BCC0KLC	BCC U0AA-U019-90-736-Z19004-050	147
BCC0KR4	BCC M488-0000-2A-000-01X850-000	237
BCC0KRM	BCC S4B5-S4B4-3A-304-YX8434-030-C009	135
BCC0KT3	BCC S4B5-S4B4-3A-304-YX8434-010-C009	135
BCC0L2Y	BCC M415-M415-3L-386-PX85A5-006	123
BCC0L2Z	BCC M415-M415-3L-386-PX85A5-020	123
BCC0L3H	BCC M415-M425-3L-386-PX85A5-006	125
BCC0L3J	BCC M415-M425-3L-386-PX85A5-020	125
BCC0L3K	BCC M415-M425-3L-386-PX85A5-050	125
BCC0L3L	BCC M415-M425-3L-386-PX85A5-100	125
BCC0L3M	BCC M415-M425-3L-386-PX85A5-150	125
BCC0L3N	BCC M425-M415-3L-386-PX85A5-006	125
BCC0L3P	BCC M425-M415-3L-386-PX85A5-020	127
BCC0L3R	BCC M425-M415-3L-386-PX85A5-050	127
BCC0L3T	BCC M425-M415-3L-386-PX85A5-100	127
BCC0L3U	BCC M425-M415-3L-386-PX85A5-150	127
BCC0L30	BCC M415-M415-3L-386-PX85A5-050	123
BCC0L31	BCC M415-M415-3L-386-PX85A5-100	123
BCC0L32	BCC M415-M415-3L-386-PX85A5-150	123
BCC0L33	BCC M425-M425-3L-386-PX85A5-006	127
BCC0L34	BCC M425-M425-3L-386-PX85A5-020	127
BCC0L35	BCC M425-M425-3L-386-PX85A5-050	129
BCC0L36	BCC M425-M425-3L-386-PX85A5-100	129
BCC0L37	BCC M425-M425-3L-386-PX85A5-150	129
BCC0LNE	BCC C3C4-C3C4-30-304-YX84A5-020-C009	139
BCC0LNF	BCC C3C4-C3C4-30-304-YX84A5-050-C009	139
BCC0LUK	BCC M414-M415-3L-304-PX04A5-006	131
BCC0LUL	BCC M414-M415-3L-304-PX04A5-020	131
BCC0LUM	BCC M414-M415-3L-304-PX04A5-050	131
BCC0LUN	BCC M414-M415-3L-304-PX04A5-100	133
BCC0LUP	BCC M414-M415-3L-304-PX04A5-150	133
BCC0LW0	BCC M424-M425-3L-304-PX04A5-006	133
BCC0LW1	BCC M424-M425-3L-304-PX04A5-020	133
BCC0LW2	BCC M424-M425-3L-304-PX04A5-050	133
BCC0LW3	BCC M424-M425-3L-304-PX04A5-100	133
BCC0LW4	BCC M424-M425-3L-304-PX04A5-150	135
BCC00R8	BIS Z-501-PU1-02/M	129
BCC00R9	BIS Z-501-PU1-05/E	129
BCC00RA	BIS Z-501-PU1-05/M	129
BCC00RC	BIS Z-501-PU1-10/E	131
BCC00TT	BKS-S 32M-00	243
BCC00TU	BKS-S 32M-02	115
BCC00TY	BKS-S 32M-05	115
BCC00TZ	BKS-S 32M-10	115
BCC00UP	BKS-S 33M-00	243
BCC00UR	BKS-S 33M-02	117
BCC00UU	BKS-S 33M-05	117
BCC00UW	BKS-S 33M-10	117
BCC00YE	BKS-S115-PU-02	117
BCC00YF	BKS-S115-PU-05	117
BCC00YH	BKS-S115-PU-10	117
BCC02H6	BKS-S 76-RT04	233
BCC02H7	BKS-S 77-RT04	223
BCC02H8	BKS-S107-RT14	227
BCC02H9	BKS-S109-RT14	221
BCC02HC	BKS-S111-RT13	211
BCC02HE	BKS-S113-RT13	213
BCC02HF	BKS-S216-RT14	215
BCC02HH	BKS-S218-RT14	217
BCC03WZ	BCC M474-0000-2D-000-51X475-000	241
BCC03Y0	BCC M484-0000-2D-000-51X475-000	241
BCC03Y1	BCC M474-0000-1D-000-51X475-000	239
BCC03Y2	BCC M484-0000-1D-000-51X475-000	241
BCC04MC	BCC M478-0000-1A-000-43X834-000	235
BCC04ME	BCC M488-0000-1A-000-43X834-000	235
BCC006A	BKS-S 48-15-CP-05	113
BCC006C	BKS-S 48-15-CP-10	113
BCC06EY	BCC M435-0000-2A-000-51X575-000	229
BCC06F6	BCC M435-0000-1A-000-51X475-000	225
BCC06F7	BCC M434-0000-2A-000-51X475-000	219
BCC06FH	BCC E834-0000-20-000-53X4T2-000	243
BCC06M4	BCC M434-0000-2A-000-41X475-000	217
BCC06W9	BCC M435-0000-1A-000-51X575-000	225
BCC06Y4	BCC M415-0000-2A-R03	293
BCC06Y5	BCC M434-0000-2A-000-55X450-000	219
BCC06Y6	BCC M435-0000-1A-000-55X450-000	225
BCC06Y8	BCC M445-0000-1A-000-51X475-000	231
BCC06YA	BCC M435-0000-2A-000-41X575-000	229
BCC06YP	BCC M454-M454-5D-RM002-000	257
BCC06Z1	BCC M333-0000-10-000-31X350-000	211
BCC06Z5	BCC M334-0000-10-000-31X450-000	215
BCC06Z7	BCC M334-0000-20-000-31X450-000	217
BCC06Z9	BCC M435-0000-1A-000-41X475-000	223
BCC06ZA	BCC M445-0000-1A-000-41X475-000	231
BCC06ZC	BCC M444-0000-2A-000-41X475-000	221
BCC06ZE	BCC M444-0000-2A-000-51X475-000	221
BCC06ZF	BCC M435-0000-1A-000-41X575-000	223
BCC06ZH	BCC M445-0000-1A-000-41X575-000	231
BCC06ZJ	BCC M445-0000-1A-000-51X575-000	231
BCC06ZK	BCC M445-0000-2A-000-41X575-000	233
BCC06ZL	BCC M445-0000-2A-000-51X575-000	233
BCC06ZM	BCC M475-0000-1A-000-01X475-000	227
BCC06ZN	BCC M475-0000-1A-000-01X575-000	227
BCC06ZY	BCC M435-0000-1A-000-43X434-000	223
BCC08C0	BCC M434-0000-2A-000-43X434-000	219
BCC08CA	BCC M415-M415-M415-U0007-000	195
BCC009A	BKS-S137-19-PC-10	113
BCC09JC	BCC M415-M313-M313-U0014-000	195
BCC09JP	BCC M435-0000-1A-000-A1X575-000	227
BCC09JW	BCC M435-0000-2A-000-A1X575-000	229
BCC09JZ	BCC M455-0000-1A-RM014-005	269
BCC09K0	BCC M455-0000-2A-RM014-005	273
BCC09MR	BCC M415-0000-2A-R04	293
BCC09MU	BCC M415-M415-M415-U0016-000	195

BCC0069 BKS-S 48-15-CP-02 113
BCC070A BCC A334-0000-20-000-61X4A5-000 205
BCC070C BCC A334-0000-20-000-71X4A5-000 205
BCC070E BCC A335-0000-10-000-51X5A5-000 205
BCC070F BCC A335-0000-10-000-61X5A5-000 205
BCC070H BCC A335-0000-10-000-71X5A5-000 207
BCC070J BCC A335-0000-20-000-51X5A5-000 207
BCC070K BCC A335-0000-20-000-61X5A5-000 207
BCC070L BCC A335-0000-20-000-71X5A5-000 209
BCC085F BCC M414-E814-BG-RM013-000 257
BCC085H BCC M424-E814-BG-RM013-000 257
BCC086A BCC M475-0000-2A-000-01X575-000 229
BCC088T BCC M62C-M41C-3E-675-PX0C25-010 131
BCC088U BCC M62C-M41C-3E-675-PX0C25-020 131
BCC089P BCC M415-M415-M415-U0003-000 195
BCC0098 BKS-S137-19-PC-02 113
BCC098M BCC A355-0000-10-RN022-006 263
BCC098N BCC A355-0000-10-RN022-020 263
BCC098P BCC A355-0000-20-RN022-006 265
BCC098R BCC A355-0000-20-RN022-020 265
BCC0099 BKS-S137-19-PC-05 113
BCC099A BCC M454-0000-2A-RM020-005 273
BCC099C BCC M455-0000-1A-RM020-005 269
BCC0706 BCC A334-0000-10-000-51X4A5-000 203
BCC0707 BCC A334-0000-10-000-61X4A5-000 203
BCC0708 BCC A334-0000-10-000-71X4A5-000 203
BCC0709 BCC A334-0000-20-000-51X4A5-000 203
BCC0714 BCC M475-0000-2B-000-01X575-000 239
BCC0715 BCC M475-0000-1B-000-01X575-000 237
BCC0716 BCC M485-0000-2B-000-01X575-000 239
BCC0717 BCC M485-0000-1B-000-01X575-000 239
BCC0718 BCC M415-0000-2B-R01 293
BCC0720 BCC A354-0000-10-RN010-020 263
BCC0722 BCC A354-0000-20-RN010-020 265
BCC0723 BCC A354-A354-30-RN011-000 257
BCC0869 BCC M474-0000-2A-000-01X475-000 220
BCC A313-0000-10-097-PX03A5-_ _ _ 79
BCC A323-0000-10-097-PX03A5-_ _ _ 79
BCC A313-A313-30-365-PX03A5-_ _ _ 79
BCC A313-0000-10-071-VX43W6-_ _ _ 79
BCC A313-0000-20-071-VX43W6-_ _ _ 79
BCC A323-0000-10-071-VX43W6-_ _ _ 79
BCC A323-0000-20-071-VX43W6-_ _ _ 79
BCC0AEF BCC 0000-0000-00-071-VX43W6-10X 79
BCC A315-A315-30-330-_ _ _ _ _ _-_ _ _ 107
BCC M415-M415-3A-330-_ _ _ _ _ _-_ _ _ 107
BCC A315-A315-30-330-_ _ _ _ _ _-_ _ _ 107
BCC0AEM BCC 0000-0000-00-030-PS85N4-10X 107
BCC0AEL BCC 0000-0000-00-030-VS85N4-10X 107
BCC0AER BCC 0000-0000-00-030-PS85N6-10X 107
BCC0AEP BCC 0000-0000-00-030-VS85N6-10X 107
BCC A314-0000-10-003-_ _ _ _ _ _-_ _ _ 81
BCC A314-0000-20-003-_ _ _ _ _ _-_ _ _ 81
BCC A324-0000-10-003-_ _ _ _ _ _-_ _ _ 81
BCC A324-0000-20-003-_ _ _ _ _ _-_ _ _ 81
BCC0ACF BCC 0000-0000-00-000-PX04A5-10X 81
BCC0AEJ BCC 0000-0000-00-003-VX44W6-10X 81
BCC0APC BCC 0000-0000-00-003-EX44W6-10X 81
BCC A314-A314-30-304-_ _ _ _ _ _-_ _ _ 83
BCC A314-A324-30-304-_ _ _ _ _ _-_ _ _ 83
BCC A324-A314-30-304-_ _ _ _ _ _-_ _ _ 83
BCC A324-A324-30-304-_ _ _ _ _ _-_ _ _ 83
BCC0ACF BCC 0000-0000-00-000-PX04A5-10X 83
BCC0AEJ BCC 0000-0000-00-003-VX44W6-10X 83
BCC0APC BCC 0000-0000-00-003-EX44W6-10X 83
BCC A315-0000-10-063-_ _ _ _ _ _-_ _ _ 85
BCC A315-0000-20-063-_ _ _ _ _ _-_ _ _ 85
BCC A325-0000-10-063-_ _ _ _ _ _-_ _ _ 85
BCC A325-0000-20-063-_ _ _ _ _ _-_ _ _ 85
BCC0ACH BCC 0000-0000-00-000-PX05A5-10X 85
BCC0AEK BCC 0000-0000-00-036-VX45W6-10X 85
BCC A315-A315-30-335-_ _ _ _ _ _-_ _ _ 87
BCC A315-A325-30-335-_ _ _ _ _ _-_ _ _ 87
BCC A325-A315-30-335-_ _ _ _ _ _-_ _ _ 87
BCC A325-A325-30-335-_ _ _ _ _ _-_ _ _ 87
BCC0ACH BCC 0000-0000-00-000-PX05A5-10X 87
BCC0AEK BCC 0000-0000-00-036-VX45W6-10X 87
BCC C3B4-0000-10-003-YX84A5-_ _ _**-C009** 89
BCC C3B4-C3B4-30-304-YX84A5-_ _ _**-C009** 89
BCC C3B5-0000-10-063-YX85A5-_ _ _**-C009** 89
BCC C3B5-C3B5-30-335-YX85A5-_ _ _**-C009** 89
BCC M418-M418-6X-378-PS58N9-_ _ _ 103
BCC M418-E818-8X0-723-PS58N9-_ _ _ 103
BCC E818-E818-90-377-PS58N9-_ _ _ 103
BCC M414-M414-6D-331-PS54N2-_ _ _ 99
BCC M414-E834-8G-668-PS54N2-_ _ _ 99
BCC E834-E834-90-334-PS54N2-_ _ _ 99
BCC0AC6 BCC 0000-0000-00-000-PS54N2-10X 99
BCC M414-M414-6D-338-ES64N9-_ _ _ 101
BCC M414-E894-8G-672-ES64N9-_ _ _ 101
BCC E894-E894-90-339-ES64N9-_ _ _ 101
BCC0AUJ BCC 0000-0000-00-168-ES64N9-10X 101
BCC M41C-0000-1A-049-PX0C25-_ _ _ 45
BCC M41C-0000-2A-049-PX0C25-_ _ _ 45
BCC M42C-0000-1A-049-PX0C25-_ _ _ 45
BCC M42C-0000-2A-049-PX0C25-_ _ _ 45
BCC M41C-M41C-3A-325-PX0C25-_ _ _ 45
BCC M61C-0000-10-065-PX0BP4-_ _ _ 111
BCC M62C-0000-10-065-PX0BP4-_ _ _ 111
BCC M61L-0000-10-022-PX0LP4-_ _ _ 111
BCC M62L-0000-10-022-PX0LP4-_ _ _ 111
BCC M313-M313-30-300-_ _ _ _ _ _-_ _ _ 19
BCC M313-M323-30-300-_ _ _ _ _ _-_ _ _ 19
BCC M313-M413-3E-300-_ _ _ _ _ _-_ _ _ 19
BCC M313-M423-3E-300-_ _ _ _ _ _-_ _ _ 19
BCC0AC7 BCC 0000-0000-00-000-PX0334-10X 19
BCC0C15 BCC 0000-0000-00-000-VX8334-10X 19
BCC0AEC BCC 0000-0000-00-001-EX43T2-10X 19
BCC0AE7 BCC 0000-0000-00-001-VX43T2-10X 19
BCC M314-M314-30-304-_ _ _ _ _ _-_ _ _ 31
BCC M314-M324-30-304-_ _ _ _ _ _-_ _ _ 31
BCC M314-M414-3E-304-_ _ _ _ _ _-_ _ _ 31
BCC M314-M424-3E-304-_ _ _ _ _ _-_ _ _ 31
BCC0AC8 BCC 0000-0000-00-000-PX0434-10X 31
BCC0C14 BCC 0000-0000-00-000-VX8434-10X 31
BCC0AEE BCC 0000-0000-00-003-EX44T2-10X 31
BCC0AE8 BCC 0000-0000-00-003-VX44T2-10X 31
BCC M313-0000-10-001-_ _ _ _ _ _-_ _ _ 15
BCC M313-0000-20-001-_ _ _ _ _ _-_ _ _ 15
BCC M323-0000-10-001-_ _ _ _ _ _-_ _ _ 15
BCC M323-0000-20-001-_ _ _ _ _ _-_ _ _ 15
BCC M313-0000-10-004-_ _ _ _ _ _-_ _ _ 15
BCC M323-0000-10-004-_ _ _ _ _ _-_ _ _ 15
BCC M323-0000-10-006-_ _ _ _ _ _-_ _ _ 15
BCC M313-0000-10-036-_ _ _ _ _ _-_ _ _ 15
BCC M323-0000-10-036-_ _ _ _ _ _-_ _ _ 15
BCC M323-M313-30-300-_ _ _ _ _ _-_ _ _ 21
BCC M323-M323-30-300-_ _ _ _ _ _-_ _ _ 21
BCC M323-M313-30-602-_ _ _ _ _ _-_ _ _ 21
BCC M323-M413-3E-300-_ _ _ _ _ _-_ _ _ 21
BCC M323-M423-3E-300-_ _ _ _ _ _-_ _ _ 21
BCC M323-M413-3E-602-_ _ _ _ _ _-_ _ _ 21
BCC0AC7 BCC 0000-0000-00-000-PX0334-10X 21
BCC0C15 BCC 0000-0000-00-000-VX8334-10X 21
BCC0AEC BCC 0000-0000-00-001-EX43T2-10X 21
BCC0AE7 BCC 0000-0000-00-001-VX43T2-10X 21

BCC M314-0000-10-003-_ _ _ _ _ _-_ _ _ 27
BCC M314-0000-20-003-_ _ _ _ _ _-_ _ _ 27
BCC M324-0000-10-003-_ _ _ _ _ _-_ _ _ 27
BCC M324-0000-20-003-_ _ _ _ _ _-_ _ _ 27
BCC M324-0000-10-008-_ _ _ _ _ _-_ _ _ 27
BCC M314-0000-10-014-_ _ _ _ _ _-_ _ _ 27
BCC M324-0000-10-014-_ _ _ _ _ _-_ _ _ 27
BCC0AC8 BCC 0000-0000-00-000-PX0434-10X 27
BCC0C14 BCC 0000-0000-00-000-VX8434-10X 27
BCC0AEE BCC 0000-0000-00-003-EX44T2-10X 27
BCC0AE8 BCC 0000-0000-00-003-VX44T2-10X 27
BCC M324-M314-30-304-_ _ _ _ _ _-_ _ _ 33
BCC M324-M324-30-304-_ _ _ _ _ _-_ _ _ 33
BCC M324-M414-3E-304-_ _ _ _ _ _-_ _ _ 33
BCC M324-M424-3E-304-_ _ _ _ _ _-_ _ _ 33
BCC0AC8 BCC 0000-0000-00-000-PX0434-10X 33
BCC0C14 BCC 0000-0000-00-000-VX8434-10X 33
BCC0AEE BCC 0000-0000-00-003-EX44T2-10X 33
BCC0AE8 BCC 0000-0000-00-003-VX44T2-10X 33
BCC M415-0000-1A-001-_ _ _ _ _ _-_ _ _ 17
BCC M413-0000-2A-001-_ _ _ _ _ _-_ _ _ 17
BCC M425-0000-1A-001-_ _ _ _ _ _-_ _ _ 17
BCC M423-0000-2A-001-_ _ _ _ _ _-_ _ _ 17
BCC M415-0000-1A-004-_ _ _ _ _ _-_ _ _ 17
BCC M425-0000-1A-004-_ _ _ _ _ _-_ _ _ 17
BCC M425-0000-1A-006-_ _ _ _ _ _-_ _ _ 17
BCC M415-0000-1A-036-_ _ _ _ _ _-_ _ _ 17
BCC M413-0000-2A-036-_ _ _ _ _ _-_ _ _ 17
BCC M425-0000-1A-036-_ _ _ _ _ _-_ _ _ 17
BCC M423-0000-2A-036-_ _ _ _ _ _-_ _ _ 17
BCC M415-0000-1A-002-_ _ _ _ _ _-_ _ _ 17
BCC M413-0000-2A-002-_ _ _ _ _ _-_ _ _ 17
BCC M425-0000-1A-002-_ _ _ _ _ _-_ _ _ 17
BCC M415-0000-1A-005-_ _ _ _ _ _-_ _ _ 17
BCC M425-0000-1A-005-_ _ _ _ _ _-_ _ _ 17
BCC M415-0000-1A-037-_ _ _ _ _ _-_ _ _ 17
BCC M413-0000-2A-037-_ _ _ _ _ _-_ _ _ 17
BCC M425-0000-1A-037-_ _ _ _ _ _-_ _ _ 17
BCC0AC7 BCC 0000-0000-00-000-PX0334-10X 17
BCC0C15 BCC 0000-0000-00-000-VX8334-10X 17
BCC0AEC BCC 0000-0000-00-001-EX43T2-10X 17
BCC0AE7 BCC 0000-0000-00-001-VX43T2-10X 17
BCC M414-M313-M313-U2026-_ _ _ 185
BCC M414-M415-M415-U2028-_ _ _ 185
B**CC M414-M425-M425-U2028-**_ _ _ 185
BCC M414-M313-M313-U2012-_ _ _ 185
BCC M414-M323-M323-U2012-_ _ _ 185
BCC M414-M415-M415-U2010-_ _ _ 185
BCC M414-M425-M425-U2010-_ _ _ 185
BCC M414-M415-M415-U2002-_ _ _ 185
BCC M414-M425-M425-U2002-_ _ _ 185
BCC M415-0000-1B-031-PS72N1-_ _ _ 105
BCC M415-M412-3B-329-PS72N1-_ _ _ 105
BCC0ACA BCC 0000-0000-00-000-PS72N1-10X 105
BCC0ACE BCC 0000-0000-00-000-VS24N7-10X 109
B CC M415-M313-3F-300-_ _ _ _ _ _-_ _ _ 23
BCC M415-M323-3F-300-_ _ _ _ _ _-_ _ _ 23
BCC M415-M413-3A-300-_ _ _ _ _ _-_ _ _ 23
BCC M415-M423-3A-300-_ _ _ _ _ _-_ _ _ 23
BCC0AC7 BCC 0000-0000-00-000-PX0334-10X 23
BCC0C15 BCC 0000-0000-00-000-VX8334-10X 23
BCC0AEC BCC 0000-0000-00-001-EX43T2-10X 23
BCC0AE7 BCC 0000-0000-00-001-VX43T2-10X 23
BCC M415-M314-3F-304-_ _ _ _ _ _-_ _ _ 35
BCC M415-M324-3F-304-_ _ _ _ _ _-_ _ _ 35
BCC M415-M414-3A-304-_ _ _ _ _ _-_ _ _ 35
BCC M415-M424-3A-304-_ _ _ _ _ _-_ _ _ 35
BCC M415-M414-3A-606-_ _ _ _ _ _-_ _ _ 35
BCC M415-M414-3A-305-PS0434-_ _ _ 35
BCC0AC8 BCC 0000-0000-00-000-PX0434-10X 35
BCC0C14 BCC 0000-0000-00-000-VX8434-10X 35
BCC0AEE BCC 0000-0000-00-003-EX44T2-10X 35
BCC0AE8 BCC 0000-0000-00-003-VX44T2-10X 35
BCC M418-0000-1A-044-PX0825-_ _ _ 43
BCC M418-0000-2A-044-PX0825-_ _ _ 43
BCC M428-0000-1A-044-PX0825-_ _ _ 43
BCC M428-0000-2A-044-PX0825-_ _ _ 43
BCC M418-M418-3A-342-PX0825-_ _ _ 43
BCC M418-0000-1A-069-PX0825-_ _ _ 43
BCC M428-0000-1A-069-PX0825-_ _ _ 43
BCC M418-0000-1A-046-PS0825-_ _ _ 43
BCC M428-0000-1A-046-PS0825-_ _ _ 43
BCC M415-0000-1A-003-_ _ _ _ _ _-_ _ _ 29
BCC M414-0000-2A-003-_ _ _ _ _ _-_ _ _ 29
BCC M425-0000-1A-003-_ _ _ _ _ _-_ _ _ 29
BCC M424-0000-2A-003-_ _ _ _ _ _-_ _ _ 29
BCC M415-0000-1A-008-_ _ _ _ _ _-_ _ _ **29**
BCC M425-0000-1A-008-_ _ _ _ _ _-_ _ _ **29**
BCC M424-0000-2A-008-_ _ _ _ _ _-_ _ _ 29
BCC M415-0000-1A-010-_ _ _ _ _ _-_ _ _ 29
BCC M425-0000-1A-010-_ _ _ _ _ _-_ _ _ 29
BCC M415-0000-1A-014-_ _ _ _ _ _-_ _ _ 29
BCC M414-0000-2A-014-_ _ _ _ _ _-_ _ _ 29
BCC M425-0000-1A-014-_ _ _ _ _ _-_ _ _ 29
BCC M424-0000-2A-014-_ _ _ _ _ _-_ _ _ 29
BCC0AC8 BCC 0000-0000-00-000-PX0434-10X 29
BCC0C14 BCC 0000-0000-00-000-VX8434-10X 29
BCC0AEE BCC 0000-0000-00-003-EX44T2-10X 29
BCC0AE8 BCC 0000-0000-00-003-VX44T2-10X 29
BCC M414-M415-3L-304-PX04A5-_ _ _ 74
BCC M424-M425-3L-304-PX04A5-_ _ _ 74
BCC0ACF BCC 0000-0000-00-000-PX04A5-10X 75
BCC M415-0000-1A-017-PX0534-_ _ _ 39
BCC M415-0000-2A-017-PX0534-_ _ _ 39
BCC M425-0000-1A-017-PX0534-_ _ _ 39
BCC M415-0000-1A-034-PX0534-_ _ _ 39
BCC M415-0000-2A-034-PX0534-_ _ _ 39
BCC M425-0000-1A-034-PX0534-_ _ _ 39
BCC M425-0000-1A-039-PX0534-_ _ _ 39
BCC M425-0000-1A-040-PX0534-_ _ _ 39
BCC0AC9 BCC 0000-0000-00-000-PX0534-10X 39
BCC M415-M415-3A-312-PX0534-_ _ _ 41
BCC M425-M415-3A-312-PX0534-_ _ _ 41
BCC M415-M415-3A-313-PX0534-_ _ _ 41
BCC M425-M415-3A-313-PX0534-_ _ _ 41
BCC M425-M415-3A-660-PX0534-_ _ _ 41
BCC M425-M425-3A-660-PX0534-_ _ _ 41
BCC M425-M415-3A-661-PX0534-_ _ _ 41
BCC M425-M425-3A-661-PX053**4-**_ _ _ **41**
BCC M415-M415-3A-315-PS0534-_ _ _ 41
BCC0AC9 BCC 0000-0000-00-000-PX0534-10X 41
BCC M415-0000-1A-001-PH0334-_ _ _ 47
BCC M425-0000-1A-001-PH0334-_ _ _ 47
BCC M415-0000-1A-003-PH0434-_ _ _ 47
BCC M425-0000-1A-003-PH0434-_ _ _ 47
BCC0H6E BCC 0000-0000-00-000-PH0434-10X 47
BCC M313-0000-10-001-PW3334-_ _ _ 48
BCC M323-0000-10-001-PW3334-_ _ _ 48
BCC M425-0000-1A-001-PW3334-_ _ _ 48
BCC M425-0000-1A-004-PW3334-_ _ _ 48
BCC M314-0000-10-003-PW3434-_ _ _ 48
BCC M324-0000-10-003-PW3434-_ _ _ 48
BCC M415-0000-1A-003-PW3434-_ _ _ 48
BCC M425-0000-1A-003-PW3434-_ _ _ 48
BCC M425-0000-1A-099-PW3434-_ _ _ 48
BCC M425-0000-1A-100-PW3534-_ _ _ 48

BCC0C1A BCC 0000-0000-00-000-PW3334-10X 49
BCC0C19 BCC 0000-0000-00-000-PW3434-10X 49
BCC0C1F BCC 0000-0000-00-003-PW3534-10X 49
BCC M414-0000-1L-003-PX04A5-_ _ _ 70
BCC M424-0000-1L-003-PX04A5-_ _ _ 70
BCC M415-0000-2L-003-PX04A5-_ _ _ 70
BCC M425-0000-2L-003-PX04A5-_ _ _ 70
BCC0ACF BCC 0000-0000-00-000-PX04A5-10X 71
BCC M415-0000-1L-150-PX85A5-5-_ _ _ 72
BCC M425-0000-1L-150-PX85A5-_ _ _ 72
BCC M415-0000-2L-150-PX85A5-_ _ _ 72
BCC M425-0000-2L-150-PX85A5-_ _ _ 72
BCC M415-M415-3L-386-PX85A5-_ _ _ 76
BCC M415-M425-3L-386-PX85A5-_ _ _ 76
BCC M425-M415-3L-386-PX85A5-_ _ _ 76
BCC M425-M425-3L-386-PX85A5-_ _ _ 76
BCC M323-M413-3E-602-PW3334-_ _ _ 51
BCC M425-M413-3A-602-PW3334-_ _ _ 51
BCC M415-M414-3A-304-PW3434-_ _ _ 51
BCC M425-M414-3A-304-PW3434-_ _ _ 51
BCC M425-M414-3A-691-PW3434-_ _ _ 51
BCC M415-M415-3A-313-PW3534-_ _ _ 51
BCC M425-M415-3A-313-PW3534-_ _ _ 51
BCC M425-M415-3A-692-PW3534-_ _ _ 51
BCC0C1A BCC 0000-0000-00-000-PW3334-10X 51
BCC0C19 BCC 0000-0000-00-000-PW3434-10X 51
BCC0C1F BCC 0000-0000-00-003-PW3534-10X 51
BCC M425-M313-3F-300-_ _ _ _ _ _-_ _ _ 25
BCC M425-M323-3F-300-_ _ _ _ _ _-_ _ _ 25
BCC M425-M413-3A-300-_ _ _ _ _ _-_ _ _ 25
BCC M425-M423-3A-300-_ _ _ _ _ _-_ _ _ 25
BCC M425-M313-3F-602-_ _ _ _ _ _-_ _ _ 25
BCC M425-M323-3F-602-_ _ _ _ _ _-_ _ _ 25
BCC M425-M413-3A-602-_ _ _ _ _ _-_ _ _ 25
BCC0AC7 BCC 0000-0000-00-000-PX0334-10X 25
BCC0C15 BCC 0000-0000-00-000-VX8334-10X 25
BCC0AEC BCC 0000-0000-00-001-EX43T2-10X 25
BCC0AE7 BCC 0000-0000-00-001-VX43T2-10X 25
BCC M425-M314-3F-304-_ _ _ _ _ _-_ _ _ 37
BCC M425-M324-3F-304-_ _ _ _ _ _-_ _ _ 37
BCC M425-M414-3A-304-_ _ _ _ _ _-_ _ _ 37
BCC M425-M424-3A-304-_ _ _ _ _ _-_ _ _ 37
BCC M425-M414-3A-606-_ _ _ _ _ _-_ _ _ 37
CC0AC8 BCC 0000-0000-00-000-PX0434-10X 37
BCC0C14 BCC 0000-0000-00-000-VX8434-10X 37
BCC0AEE BCC 0000-0000-00-003-EX44T2-10X 37
BCC0AE8 BCC 0000-0000-00-003-VX44T2-10X 37
BCC VA04-0000-10-054-_ _ _ _ _ _-_ _ _ 91
BCC VA04-0000-10-053-_ _ _ _ _ _-_ _ _ 91
BCC VA04-M413-3E-664-_ _ _ _ _ _-_ _ _ 91
BCC PA04-0000-10-070-PX0550-_ _ _ 91
BCC PA24-0000-10-070-PX0550-_ _ _ 91
BCC S4B5-S4B4-3A-304-YX8434-_ _ _-C009 68
BCC S4B5-S4B5-3A-313-YX8534-_ _ _-C009 68
BCC S4B8-0000-1A-045-YX8825-_ _ _-C009 68
BCC S4B8-S4B8-3A-321-YX8825-_ _ _-C009 68
BCC S4B5-0000-1A-003-YX8434-_ _ _-C009 66
BCC S4C5-0000-1A-003-YX8434-_ _ _-C009 66
BCC S4B5-0000-1A-017-YX8534-_ _ _-C009 66
BCC S4C5-0000-1A-017-YX8534-_ _ _-C009 66
BCC S4B5-0000-1A-034-YX8534-_ _ _-C009 66
BCC M415-VA04-VA04-U2005-_ _ _ 187
BCC M415-VA04-VA04-U2004-_ _ _ 187
BCC VA04-VA04-M415-T4075-_ _ _ 187
BCC VB03-0000-10-055-_ _ _ _ _ _-_ _ _ 93
BCC VB23-0000-10-055-_ _ _ _ _ _-_ _ _ 93
BCC VB43-0000-10-055-_ _ _ _ _ _-_ _ _ 93
BCC VB63-0000-10-055-_ _ _ _ _ _-_ _ _ 93
BCC VB03-M413-3E-666-PX0350-_ _ _ 95
BCC VB23-M413-3E-666-PX0350-_ _ _ 95
BCC VB43-M413-3E-666-PX0350-_ _ _ 95
B**CC VB63-M413-3E-666-PX0350-_ _ _** 95
BCC VC04-0000-10-053-_ _ _ _ _ _-_ _ _ 97
BCC VC04-M413-3E-664-PX0350-_ _ _ 97
BCC VC44-0000-10-053-_ _ _ _ _ _-_ _ _ 97
BCC VC44-M413-3E-664-PX0350-_ _ _ 97
BCC W415-0000-1A-003-SW0434-_ _ _ 57
BCC W425-0000-1A-003-SW0434-_ _ _ 57
BCC W415-W414-3A-304-SW0434-_ _ _ 57
BCC W425-W414-3A-304-SW0434-_ _ _ 57
BCC W415-W414-3A-650-SW0434-_ _ _ 57
BCC W425-W414-3A-650-SW0434-_ _ _ 57
BCC0HA8 BCC 0000-0000-00-003-SW0434-10X 57
BCC W313-0000-10-001-BW8334-_ _ _ 53
BCC W323-0000-10-001-BW8334-_ _ _ 53
BCC W314-0000-10-003-BW8434-_ _ _ 53
BCC W324-0000-10-003-BW8434-_ _ _ 53
BCC W415-0000-1A-003-BW8434-_ _ _ 53
BCC W425-0000-1A-003-BW8434-_ _ _ 53
BCC W313-0000-10-001-TW0334-_ _ _ 59
BCC W323-0000-10-001-TW0334-_ _ _ 59
BCC W314-0000-10-003-TW0434-_ _ _ 59
BCC W324-0000-10-003-TW0434-_ _ _ 59
BCC W415-0000-1A-003-TW0434-_ _ _ 59
BCC W425-0000-1A-003-TW0434-_ _ _ 59
BCC W313-0000-10-001-MW8334-_ _ _ 63
BCC W323-0000-10-001-MW8334-_ _ _ 663
BCC W314-0000-10-003-MW8434-_ _ _ 63
BCC W324-0000-10-003-MW8434-_ _ _ 63
BCC W415-0000-1A-003-MW8434-_ _ _ 63
BCC W425-0000-1A-003-MW8434-_ _ _ 63
BCC W313-W313-30-300-BW8334-_ _ _ 55
BCC W415-W414-3A-304-BW8434-_ _ _ 55
BCC W425-W414-3A-304-BW8434-_ _ _ 55
BCC W313-W313-30-300-TW0334-_ _ _ 61
BCC W415-W414-3A-304-TW0434-_ _ _ 61
BCC W425-W414-3A-304-TW0434-_ _ _ 61
BCC W415-W414-3A-650-TW0434-_ _ _ 61
BCC W425-W414-3A-650-TW0434-_ _ _ 61
BCC W313-W313-30-300-MW8334-_ _ _ 65
BCC W323-W313-30-300-MW8334-_ _ _ 65
BCC W415-W414-3A-304-MW8434-_ _ _ 65
BCC W425-W414-3A-304-MW8434-_ _ _ 65
BFO005F BFO D22-LA-AC-20 351
BFO005J BFO D22-LA-BC-10 351
BFO005L BFO D22-LA-CC-30 351
BNI00C1 BNI IOL-760-002-E066 609
BNI00C6 BNI IOL-730-002-E023 609
BNI00C7 BNI IOL-740-002-E023 609
BNI00C8 BNI IOL-725-002-E023 609
BNI00C9 BNI IOL-717-002-E023 609
BNI004C BNI IOL-722-000-K023 611
BNI004E BNI IOL-724-000-K023 611
BNI004T BNI IOL-716-000-K023 611
BNI0041 BNI IOL-712-000-K023 609
BNI0042 BNI IOL-714-000-K023 611
BNI0073 BNI USB-901-013-A501 607
BPI 4M3030-5K-B0-SM48T 301
BPI 4M3030-5K-B0-SM4CT 301
BPI 6M3030-5K-B0-SM48T 301
BPI 6M3030-5K-B0-SM4CT 301
BPI 4M303P-5K-B0-SM48T 301
BPI 4M303P-5K-B0-SM4CT 301
BPI 6M303P-5K-B0-SM48T 301
BPI 6M303P-5K-B0-SM4CT 301
BPI 4M3040-5K-B0-SM4CT 301

BPI 4M304P-5K-B0-SM4CT 301
BPI 4M4A40-2K-B0-KPX70-_ _ _ 305
BPI 8M4A40-2K-B0-KPXB0-_ _ _ 305
BPI 4M4A4P-2K-B0-KPX70-_ _ _ 305
BPI 8M4A4P-2K-B0-KPXB0-_ _ _ 305
BPI 4M4A50-2K-B0-KPXB0-_ _ _ 305
BPI 8M4A50-2K-B0-KPXL0-_ _ _ 305
BPI 4M4A5P-2K-B0-KPXB0-_ _ _ 305
BPI 8M4A5P-2K-B0-KPXL0-_ _ _ 305
BPI 4M4A40-2K-B0-SM6CT 307
BPI 8M4A40-2K-B0-SM6CT 307
BPI 4M4A4P-2K-B0-SM6CT 307
BPI 8M4A4P-2K-B0-SM6CT 307
BPI 4M4A50-2K-B0-SM6LT 307
BPI 8M4A50-2K-B0-SM6LT 307
BPI 4M4A5P-2K-B0-SM6LT 307
BPI 8M4A5P-2K-B0-SM6LT 307
BPI 4M4A4P-2K-00-TPS9 309
BPI 8M4A4P-2K-00-TPSE 309
BPI 4M4A5P-2K-00-TPSG 309
BPI 8M4A5P-2K-00-TPSN 309
BPI 4M3030-5K-B0-KPX60-_ _ _ 299
BPI 6M3030-5K-B0-KPX80-_ _ _ 299
BPI 8M3030-5K-B0-KPXA0-_ _ _ 299
BPI AM3030-5K-B0-KPXC0-_ _ _ 299
BPI 4M303P-5K-B0-KPX60-_ _ _ 299
BPI 6M303P-5K-B0-KPX80-_ _ _ 299
BPI 8M303P-5K-B0-KPXA0-_ _ _ 299
BPI AM303P-5K-B0-KPXC0-_ _ _ 299
BPI 4M3040-5K-B0-KPXA0-_ _ _ 299
BPI 6M3040-5K-B0-KPXE0-_ _ _ 299
BPI 8M3040-5K-B0-KPXK0-_ _ _ 299
BPI AM3040-5K-B0-KPXP0-_ _ _ 299
BPI 4M304P-5K-B0-KPXA0-_ _ _ 299
BPI 6M304P-5K-B0-KPXE0-_ _ _ 299
BPI 8M304P-5K-B0-KPXK0-_ _ _ 299
BPI AM304P-5K-B0-KPXP0-_ _ _ 299
BPI 8M**3030-5K-B0-SM4CT** 303
BPI AM3030-5K-B0-SM4CT 303
BPI 8M303P-5K-B0-SM4CT 303
BPI AM303P-5K-B0-SM4CT 303
BPI 4M4A4P-2K-00-TP09 310
BPI 8M4A4P-2K-00-TP0E 310
BPI 4M4A5P-2K-00-TP0G 310
BPI 8M4A5P-2K-00-TP0N 310
BPI T009-K-00-KPX70-_ _ _ 310
BPI T00E-K-00-KPXB0-_ _ _ 310
BPI T00G-K-00-KPXB0-_ _ _ 310
BPI T00N-K-00-KPXL0-_ _ _ 310
BPI T00G-K-00-KPXD0-_ _ _ 310
BPI T00N-K-00-KPXN0-_ _ _ 310
BAV DG-PH-00096-01 431
SET01NU BAV BP-PH-00180-01 431
SET01U1 BAV BP-PH-00214-01 431
SET011L BAV BP-PH-00064-01 431
SET011M BAV BP-PH-00065-01 431
SET015A BAV BP-PH-00093-01 395
SET015F BAV BP-PH-00093-02 397
SET016A BAV BP-PH-00101-02 395
SET016C BAV BP-PH-00102-01 393
SET016E BAV BP-PH-00102-02 395
SET017R BAV BP-PH-00093-11 397
SET017T BAV BP-PH-00093-12 397
SET017U BAV BP-PH-00100-11 393
SET017Y BAV BP-PH-00101-11 395
SET017Z BAV BP-PH-00101-12 395
SET0167 BAV BP-PH-00100-01 393
SET0168 BAV BP-PH-00100-02 393
SET0169 BAV BP-PH-00101-01 395
SET0180 BAV BP-PH-00102-11 395
SET0181 BAV BP-PH-00102-12 395

Alphanumeric Index

SORTED BY PART NUMBER

BCC M313-0000-10-001-_ _ _ _ _ _-_ _ _ 15
BCC M313-0000-20-001-_ _ _ _ _ _-_ _ _ 15
BCC M323-0000-10-001-_ _ _ _ _ _-_ _ _ 15
BCC M323-0000-20-001-_ _ _ _ _ _-_ _ _ 15
BCC M313-0000-10-004-_ _ _ _ _ _-_ _ _ 15
BCC M323-0000-10-004-_ _ _ _ _ _-_ _ _ 15
BCC M323-0000-10-006-_ _ _ _ _ _-_ _ _ 15
BCC M313-0000-10-036-_ _ _ _ _ _-_ _ _ 15
BCC M323-0000-10-036-_ _ _ _ _ _-_ _ _ 15
BCC M415-0000-1A-001-_ _ _ _ _ _-_ _ _ 17
BCC M413-0000-2A-001-_ _ _ _ _ _-_ _ _ 17
BCC M425-0000-1A-001-_ _ _ _ _ _-_ _ _ 17
BCC M423-0000-2A-001-_ _ _ _ _ _-_ _ _ 17
BCC M415-0000-1A-004-_ _ _ _ _ _-_ _ _ 17
BCC M425-0000-1A-004-_ _ _ _ _ _-_ _ _ 17
BCC M425-0000-1A-006-_ _ _ _ _ _-_ _ _ 17
BCC M415-0000-1A-036-_ _ _ _ _ _-_ _ _ 17
BCC M413-0000-2A-036-_ _ _ _ _ _-_ _ _ 17
BCC M425-0000-1A-036-_ _ _ _ _ _-_ _ _ 17
BCC M423-0000-2A-036-_ _ _ _ _ _-_ _ _ 17
BCC M415-0000-1A-002-_ _ _ _ _ _-_ _ _ 17
BCC M413-0000-2A-002-_ _ _ _ _ _-_ _ _ 17
BCC M425-0000-1A-002-_ _ _ _ _ _-_ _ _ 17
BCC M415-0000-1A-005-_ _ _ _ _ _-_ _ _ 17
BCC M425-0000-1A-005-_ _ _ _ _ _-_ _ _ 17
BCC M415-0000-1A-037-_ _ _ _ _ _-_ _ _ 17
BCC M413-0000-2A-037-_ _ _ _ _ _-_ _ _ 17
BCC M425-0000-1A-037-_ _ _ _ _ _-_ _ _ 17
BCC0AC7 **BCC 0000-0000-00-000-PX0334-10X** 17
BCC0C15 **BCC 0000-0000-00-000-VX8334-10X** 17
BCC0AEC **BCC 0000-0000-00-001-EX43T2-10X** 17
BCC0AE7 **BCC 0000-0000-00-001-VX43T2-10X** 17
BCC M313-M313-30-300-_ _ _ _ _ _-_ _ _ 19
BCC M313-M323-30-300-_ _ _ _ _ _-_ _ _ 19
BCC M313-M413-3E-300-_ _ _ _ _ _-_ _ _ 19
BCC M313-M423-3E-300-_ _ _ _ _ _-_ _ _ 19
BCC0AC7 **BCC 0000-0000-00-000-PX0334-10X** 19
BCC0C15 **BCC 0000-0000-00-000-VX8334-10X** 19
BCC0AEC **BCC 0000-0000-00-001-EX43T2-10X** 19
BCC0AE7 **BCC 0000-0000-00-001-VX43T2-10X** 19
BCC M323-M313-30-300-_ _ _ _ _ _-_ _ _ 21
BCC M323-M323-30-300-_ _ _ _ _ _-_ _ _ 21
BCC M323-M313-30-602-_ _ _ _ _ _-_ _ _ 21
BCC M323-M413-3E-300-_ _ _ _ _ _-_ _ _ 21
BCC M323-M423-3E-300-_ _ _ _ _ _-_ _ _ 21
BCC M323-M413-3E-602-_ _ _ _ _ _-_ _ _ 21
BCC0AC7 **BCC 0000-0000-00-000-PX0334-10X** 21
BCC0C15 **BCC 0000-0000-00-000-VX8334-10X** 21
BCC0AEC **BCC 0000-0000-00-001-EX43T2-10X** 21
BCC0AE7 **BCC 0000-0000-00-001-VX43T2-10X** 21
BCC M415-M313-3F-300-_ _ _ _ _ _-_ _ _ 23
BCC M415-M323-3F-300-_ _ _ _ _ _-_ _ _ 23
BCC M415-M413-3A-300-_ _ _ _ _ _-_ _ _ 23
BCC M415-M423-3A-300-_ _ _ _ _ _-_ _ _ 23
BCC0AC7 **BCC 0000-0000-00-000-PX0334-10X** 23
BCC0C15 **BCC 0000-0000-00-000-VX8334-10X** 23
BCC0AEC **BCC 0000-0000-00-001-EX43T2-10X** 23
BCC0AE7 **BCC 0000-0000-00-001-VX43T2-10X** 23
BCC M425-M313-3F-300-_ _ _ _ _ _-_ _ _ 25
BCC M425-M323-3F-300-_ _ _ _ _ _-_ _ _ 25
BCC M425-M413-3A-300-_ _ _ _ _ _-_ _ _ 25
BCC M425-M423-3A-300-_ _ _ _ _ _-_ _ _ 25
BCC M425-M313-3F-602-_ _ _ _ _ _-_ _ _ 25
BCC M425-M323-3F-602-_ _ _ _ _ _-_ _ _ 25
BCC M425-M413-3A-602-_ _ _ _ _ _-_ _ _ 25
BCC0AC7 **BCC 0000-0000-00-000-PX0334-10X** 25
BCC0C15 **BCC 0000-0000-00-000-VX8334-10X** 25
BCC0AEC **BCC 0000-0000-00-001-EX43T2-10X** 25
BCC0AE7 **BCC 0000-0000-00-001-VX43T2-10X** 25
BCC M314-0000-10-003-_ _ _ _ _ _-_ _ _ 27
BCC M314-0000-20-003-_ _ _ _ _ _-_ _ _ 27
BCC M324-0000-10-003-_ _ _ _ _ _-_ _ _ 27
BCC M324-0000-20-003-_ _ _ _ _ _-_ _ _ 27
BCC M324-0000-10-008-_ _ _ _ _ _-_ _ _ 27
BCC M314-0000-10-014-_ _ _ _ _ _-_ _ _ 27
BCC M324-0000-10-014-_ _ _ _ _ _-_ _ _ 27
BCC0AC8 **BCC 0000-0000-00-000-PX0434-10X** 27
BCC0C14 **BCC 0000-0000-00-000-VX8434-10X** 27
BCC0AEE **BCC 0000-0000-00-003-EX44T2-10X** 27
BCC0AE8 **BCC 0000-0000-00-003-VX44T2-10X** 27
BCC M415-0000-1A-003-_ _ _ _ _ _-_ _ _ 29
BCC M414-0000-2A-003-_ _ _ _ _ _-_ _ _ 29
BCC M425-0000-1A-003-_ _ _ _ _ _-_ _ _ 29
BCC M424-0000-2A-003-_ _ _ _ _ _-_ _ _ 29
BCC M415-0000-1A-008-_ _ _ _ _ _-_ _ _ 29
BCC M425-0000-1A-008-_ _ _ _ _ _-_ _ _ 29
BCC M424-0000-2A-008-_ _ _ _ _ _-_ _ _ 29
BCC M415-0000-1A-010-_ _ _ _ _ _-_ _ _ 29
BCC M425-0000-1A-010-_ _ _ _ _ _-_ _ _ 29
BCC M415-0000-1A-014-_ _ _ _ _ _-_ _ _ 29
BCC M414-0000-2A-014-_ _ _ _ _ _-_ _ _ 29
BCC M425-0000-1A-014-_ _ _ _ _ _-_ _ _ 29
BCC M424-0000-2A-014-_ _ _ _ _ _-_ _ _ 29
BCC0AC8 **BCC 0000-0000-00-000-PX0434-10X** 29
BCC0C14 **BCC 0000-0000-00-000-VX8434-10X** 29
BCC0AEE **BCC 0000-0000-00-003-EX44T2-10X** 29
BCC0AE8 **BCC 0000-0000-00-003-VX44T2-10X** 29
BCC M314-M314-30-304-_ _ _ _ _ _-_ _ _ 31
BCC M314-M324-30-304-_ _ _ _ _ _-_ _ _ 31
BCC M314-M414-3E-304-_ _ _ _ _ _-_ _ _ 31
BCC M314-M424-3E-304-_ _ _ _ _ _-_ _ _ 31
BCC0AC8 **BCC 0000-0000-00-000-PX0434-10X** 31
BCC0C14 **BCC 0000-0000-00-000-VX8434-10X** 31
BCC0AEE **BCC 0000-0000-00-003-EX44T2-10X** 31
BCC0AE8 **BCC 0000-0000-00-003-VX44T2-10X** 31
BCC M324-M314-30-304-_ _ _ _ _ _-_ _ _ 33
BCC M324-M324-30-304-_ _ _ _ _ _-_ _ _ 33
BCC M324-M414-3E-304-_ _ _ _ _ _-_ _ _ 33
BCC M324-M424-3E-304-_ _ _ _ _ _-_ _ _ 33

BCC0AC8 **BCC 0000-0000-00-000-PX0434-10X** 33
BCC0C14 **BCC 0000-0000-00-000-VX8434-10X** 33
BCC0AEE **BCC 0000-0000-00-003-EX44T2-10X** 33
BCC0AE8 **BCC 0000-0000-00-003-VX44T2-10X** 33
BCC M415-M314-3F-304-_ _ _ _ _ _-_ _ _ 35
BCC M415-M324-3F-304-_ _ _ _ _ _-_ _ _ 35
BCC M415-M414-3A-304-_ _ _ _ _ _-_ _ _ 35
BCC M415-M424-3A-304-_ _ _ _ _ _-_ _ _ 35
BCC M415-M414-3A-606-_ _ _ _ _ _-_ _ _ 35
BCC M415-M414-3A-305-PS0434-_ _ _ 35
BCC0AC8 **BCC 0000-0000-00-000-PX0434-10X** 35
BCC0C14 **BCC 0000-0000-00-000-VX8434-10X** 35
BCC0AEE **BCC 0000-0000-00-003-EX44T2-10X** 35
BCC0AE8 **BCC 0000-0000-00-003-VX44T2-10X** 35
BCC M425-M314-3F-304-_ _ _ _ _ _-_ _ _ 37
BCC M425-M324-3F-304-_ _ _ _ _ _-_ _ _ 37
BCC M425-M414-3A-304-_ _ _ _ _ _-_ _ _ 37
BCC M425-M424-3A-304-_ _ _ _ _ _-_ _ _ 37
BCC M425-M414-3A-606-_ _ _ _ _ _-_ _ _ 37
BCC0AC8 **BCC 0000-0000-00-000-PX0434-10X** 37
BCC0C14 **BCC 0000-0000-00-000-VX8434-10X** 37
BCC0AEE **BCC 0000-0000-00-003-EX44T2-10X** 37
BCC0AE8 **BCC 0000-0000-00-003-VX44T2-10X** 37
BCC M415-0000-1A-017-PX0534-_ _ _ 39
BCC M415-0000-2A-017-PX0534-_ _ _ 39
BCC M425-0000-1A-017-PX0534-_ _ _ 39
BCC M415-0000-1A-034-PX0534-_ _ _ 39
BCC M415-0000-2A-034-PX0534-_ _ _ 39
BCC M425-0000-1A-034-PX0534-_ _ _ 39
BCC M425-0000-1A-039-PX0534-_ _ _ 39
BCC M425-0000-1A-040-PX0534-_ _ _ 39
BCC0AC9 **BCC 0000-0000-00-000-PX0534-10X** 39
BCC M415-M415-3A-312-PX0534-_ _ _ 41
BCC M425-M415-3A-312-PX0534-_ _ _ 41
BCC M415-M415-3A-313-PX0534-_ _ _ 41
BCC M425-M415-3A-313-PX0534-_ _ _ 41
BCC M425-M415-3A-660-PX0534-_ _ _ 41
BCC M425-M425-3A-660-PX0534-_ _ _ 41
BCC M425-M415-3A-661-PX0534-_ _ _ 41
BCC M425-M425-3A-661-PX0534-_ _ _ 41
BCC M415-M415-3A-315-PS0534-_ _ _ 41
BCC0AC9 **BCC 0000-0000-00-000-PX0534-10X** 41
BCC M418-0000-1A-044-PX0825-_ _ _ 43
BCC M418-0000-2A-044-PX0825-_ _ _ 43
BCC M428-0000-1A-044-PX0825-_ _ _ 43
BCC M428-0000-2A-044-PX0825-_ _ _ 43
BCC M418-M418-3A-342-PX0825-_ _ _ 43
BCC M418-0000-1A-069-PX0825-_ _ _ 43
BCC M428-0000-1A-069-PX0825-_ _ _ 43
BCC M418-0000-1A-046-PS0825-_ _ _ 43
BCC M428-0000-1A-046-PS0825-_ _ _ 43
BCC M41C-0000-1A-049-PX0C25-_ _ _ 45
BCC M41C-0000-2A-049-PX0C25-_ _ _ 45
BCC M42C-0000-1A-049-PX0C25-_ _ _ 45
BCC M42C-0000-2A-049-PX0C25-_ _ _ 45
BCC M41C-M41C-3A-325-PX0C25-_ _ _ 45
BCC M415-0000-1A-001-PH0334-_ _ _ 47
BCC M425-0000-1A-001-PH0334-_ _ _ 47
BCC M415-0000-1A-003-PH0434-_ _ _ 47
BCC0H6E **BCC 0000-0000-00-000-PH0434-10X** 47
BCC M313-0000-10-001-PW3334-_ _ _ 48
BCC M323-0000-10-001-PW3334-_ _ _ 48
BCC M425-0000-1A-001-PW3334-_ _ _ 48
BCC M425-0000-1A-004-PW3334-_ _ _ 48
BCC M314-0000-10-003-PW3434-_ _ _ 48
BCC M324-0000-10-003-PW3434-_ _ _ 48
BCC M415-0000-1A-003-PW3434-_ _ _ 48
BCC M425-0000-1A-003-PW3434-_ _ _ 48
BCC M425-0000-1A-099-PW3434-_ _ _ 48
BCC M425-0000-1A-100-PW3534-_ _ _ 48
BCC0C1A **BCC 0000-0000-00-000-PW3334-10X** 49
BCC0C19 **BCC 0000-0000-00-000-PW3434-10X** 49
BCC0C1F **BCC 0000-0000-00-003-PW3534-10X** 49
BCC M323-M413-3E-602-PW3334-_ _ _ 51
BCC M425-M413-3A-602-PW3334-_ _ _ 51
BCC M415-M414-3A-304-PW3434-_ _ _ 51
BCC M425-M414-3A-304-PW3434-_ _ _ 51
BCC M425-M414-3A-691-PW3434-_ _ _ 51
BCC M415-M415-3A-313-PW3534-_ _ _ 51
BCC M425-M415-3A-313-PW3534-_ _ _ 51
BCC M425-M415-3A-692-PW3534-_ _ _ 51
BCC0C1A **BCC 0000-0000-00-000-PW3334-10X** 51
BCC0C19 **BCC 0000-0000-00-000-PW3434-10X** 51
BCC0C1F **BCC 0000-0000-00-003-PW3534-10X** 51
BCC W313-0000-10-001-BW8334-_ _ _ 53
BCC W323-0000-10-001-BW8334-_ _ _ 53
BCC W314-0000-10-003-BW8434-_ _ _ 53
BCC W324-0000-10-003-BW8434-_ _ _ 53
BCC W415-0000-1A-003-BW8434-_ _ _ 53
BCC W425-0000-1A-003-BW8434-_ _ _ 53
BCC W313-W313-30-300-BW8334-_ _ _ 55
BCC W415-W414-3A-304-BW8434-_ _ _ 55
BCC W425-W414-3A-304-BW8434-_ _ _ 55
BCC W415-0000-1A-003-SW0434-_ _ _ 57
BCC W425-0000-1A-003-SW0434-_ _ _ 57
BCC W415-W414-3A-304-SW0434-_ _ _ 57
BCC W425-W414-3A-304-SW0434-_ _ _ 57
BCC W415-W414-3A-650-SW0434-_ _ _ 57
BCC W425-W414-3A-650-SW0434-_ _ _ 57
BCC0HA8 BCC 0000-0000-00-003-SW0434-10X 57
BCC W313-0000-10-001-TW0334-_ _ _ 59
BCC W323-0000-10-001-TW0334-_ _ _ 59
BCC W314-0000-10-003-TW0434-_ _ _ 59
BCC W324-0000-10-003-TW0434-_ _ _ 59
BCC W415-0000-1A-003-TW0434-_ _ _ 59
BCC W425-0000-1A-003-TW0434-_ _ _ 59
BCC W313-W313-30-300-TW0334-_ _ _ 61
BCC W415-W414-3A-304-TW0434-_ _ _ 61
BCC W425-W414-3A-304-TW0434-_ _ _ 61
BCC W415-W414-3A-650-TW0434-_ _ _ 61
BCC W425-W414-3A-650-TW0434-_ _ _ 61
BCC W313-0000-10-001-MW8334-_ _ _ 63
BCC W323-0000-10-001-MW8334-_ _ _ 63
BCC W314-0000-10-003-MW8434-_ _ _ 63
BCC W324-0000-10-003-MW8434-_ _ _ 63
BCC W415-0000-1A-003-MW8434-_ _ _ 63
BCC W425-0000-1A-003-MW8434-_ _ _ 63
BCC W313-W313-30-300-MW8334-_ _ _ 65
BCC W323-W313-30-300-MW8334-_ _ _ 65
BCC W415-W414-3A-304-MW8434-_ _ _ 65
BCC W425-W414-3A-304-MW8434-_ _ _ 65
BCC S4B5-0000-1A-003-YX8434-_ _ _-C009 66
BCC S4C5-0000-1A-003-YX8434-_ _ _-C00 66
BCC S4B5-0000-1A-017-YX8534-_ _ _-C009 66
BCC S4C5-0000-1A-017-YX8534-_ _ _-C009 66
BCC S4B5-0000-1A-034-YX8534-_ _ _-C009 66
BCC S4B5-S4B4-3A-304-YX8434-_ _ _-C009 68
BCC S4B5-S4B5-3A-313-YX8534-_ _ _-C009 68
BCC S4B8-0000-1A-045-YX8825-_ _ _-C009 68
BCC S4B8-S4B8-3A-321-YX8825-_ _ _-C009 68
BCC M414-0000-1L-003-PX04A5-_ _ _ 70
BCC M424-0000-1L-003-PX04A5-_ _ _ 70
BCC M415-0000-2L-003-PX04A5-_ _ _ 70
BCC M425-0000-2L-003-PX04A5-_ _ _ 70
BCC0ACF **BCC 0000-0000-00-000-PX04A5-10X** 71
BCC M415-0000-1L-150-PX85A5-5-_ _ _ 72

BCC M425-0000-1L-150-PX85A5-___		**72**
BCC M415-0000-2L-150-PX85A5-___		**72**
BCC M425-0000-2L-150-PX85A5-___		**72**
BCC M414-M415-3L-304-PX04A5-___		**74**
BCC M424-M425-3L-304-PX04A5-___		**74**
BCC0ACF	**BCC 0000-0000-00-000-PX04A5-10X**	**75**
BCC M415-M415-3L-386-PX85A5-___		**76**
BCC M415-M425-3L-386-PX85A5-___		**76**
BCC M425-M415-3L-386-PX85A5-___		**76**
BCC M425-M425-3L-386-PX85A5-___		**76**
BCC A313-0000-10-097-PX03A5-___		**79**
BCC A323-0000-10-097-PX03A5-___		**79**
BCC A313-A313-30-365-PX03A5-___		**79**
BCC A313-0000-10-071-VX43W6-___		**79**
BCC A313-0000-20-071-VX43W6-___		**79**
BCC A323-0000-10-071-VX43W6-___		**79**
BCC A323-0000-20-071-VX43W6-___		**79**
BCC0AEF	**BCC 0000-0000-00-071-VX43W6-10X**	**79**
BCC A314-0000-10-003-_____-___		**81**
BCC A314-0000-20-003-_____-___		**81**
BCC A324-0000-10-003-_____-___		**81**
BCC A324-0000-20-003-_____-___		**81**
BCC0ACF	**BCC 0000-0000-00-000-PX04A5-10X**	**81**
BCC0AEJ	**BCC 0000-0000-00-003-VX44W6-10X**	**81**
BCC0APC	**BCC 0000-0000-00-003-EX44W6-10X**	**81**
BCC A314-A314-30-304-_____-___		**83**
BCC A314-A324-30-304-_____-___		**83**
BCC A324-A314-30-304-_____-___		**83**
BCC A324-A324-30-304-_____-___		**83**
BCC0ACF	**BCC 0000-0000-00-000-PX04A5-10X**	**83**
BCC0AEJ	**BCC 0000-0000-00-003-VX44W6-10X**	**83**
BCC0APC	**BCC 0000-0000-00-003-EX44W6-10X**	**83**
BCC A315-0000-10-063-_____-___		**85**
BCC A315-0000-20-063-_____-___		**85**
BCC A325-0000-10-063-_____-___		**85**
BCC A325-0000-20-063-_____-___		**85**
BCC0ACH	**BCC 0000-0000-00-000-PX05A5-10X**	**85**
BCC0AEK	**BCC 0000-0000-00-036-VX45W6-10X**	**85**
BCC A315-A315-30-335-_____-___		**87**
BCC A315-A325-30-335-_____-___		**87**
BCC A325-A315-30-335-_____-___		**87**
BCC A325-A325-30-335-_____-___		**87**
BCC0ACH	**BCC 0000-0000-00-000-PX05A5-10X**	**87**
BCC0AEK	**BCC 0000-0000-00-036-VX45W6-10X**	**87**
BCC C3B4-0000-10-003-YX84A5-___-C009		**89**
BCC C3B4-C3B4-30-304-YX84A5-___-C009		**89**
BCC C3B5-0000-10-063-YX85A5-___-C009		**89**
BCC C3B5-C3B5-30-335-YX85A5-___-C009		**89**
BCC VA04-0000-10-054-_____-___		**91**
BCC VA04-0000-10-053-_____-___		**91**
BCC VA04-M413-3E-664-_____-___		**91**
BCC PA04-0000-10-070-PX0550-___		**91**
BCC PA24-0000-10-070-PX0550-___		**91**
BCC VB03-0000-10-055-_____-___		**93**
BCC VB23-0000-10-055-_____-___		**93**
BCC VB43-0000-10-055-_____-___		**93**
BCC VB63-0000-10-055-_____-___		**93**
BCC VB03-M413-3E-666-PX0350-___		**95**
BCC VB23-M413-3E-666-PX0350-___		**95**
BCC VB43-M413-3E-666-PX0350-___		**95**
BCC VB63-M413-3E-666-PX0350-___		**95**
BCC VC04-0000-10-053-_____-___		**97**
BCC VC04-M413-3E-664-PX0350-___		**97**
BCC VC44-0000-10-053-_____-___		**97**
BCC VC44-M413-3E-664-PX0350-___		**97**
BCC M414-M414-6D-331-PS54N2-___		**99**
BCC M414-E834-8G-668-PS54N2-___		**99**
BCC E834-E834-90-334-PS54N2-___		**99**
BCC0AC6	**BCC 0000-0000-00-000-PS54N2-10X**	**99**
BCC M414-M414-6D-338-ES64N9-___		**101**
BCC M414-E894-8G-672-ES64N9-___		**101**
BCC E894-E894-90-339-ES64N9-___		**101**
BCC0AUJ	**BCC 0000-0000-00-168-ES64N9-10X**	**101**
BCC M418-M418-6X-378-PS58N9-___		**103**
BCC M418-E818-8X0-723-PS58N9-___		**103**
BCC E818-E818-90-377-PS58N9-___		**103**
BCC M415-0000-1B-031-PS72N1-___		**105**
BCC M415-M412-3B-329-PS72N1-___		**105**
BCC0ACA	**BCC 0000-0000-00-000-PS72N1-10X**	**105**
BCC A315-A315-30-330-_____-___		**107**
BCC M415-M415-3A-330-_____-___		**107**
BCC A315-A315-30-330-_____-___		**107**
BCC0AEM	**BCC 0000-0000-00-030-PS85N4-10X**	**107**
BCC0AEL	**BCC 0000-0000-00-030-VS85N4-10X**	**107**
BCC0AER	**BCC 0000-0000-00-030-PS85N6-10X**	**107**
BCC0AEP	**BCC 0000-0000-00-030-VS85N6-10X**	**107**
BCC0ACE	**BCC 0000-0000-00-000-VS24N7-10X**	**109**
BCC M61C-0000-10-065-PX0BP4-___		**111**
BCC M62C-0000-10-065-PX0BP4-___		**111**
BCC M61L-0000-10-022-PX0LP4-___		**111**
BCC M62L-0000-10-022-PX0LP4-___		**111**
BCC0069	**BKS-S 48-15-CP-02**	**113**
BCC006A	**BKS-S 48-15-CP-05**	**113**
BCC006C	**BKS-S 48-15-CP-10**	**113**
BCC0098	**BKS-S137-19-PC-02**	**113**
BCC0099	**BKS-S137-19-PC-05**	**113**
BCC009A	**BKS-S137-19-PC-10**	**113**
BCC00TU	**BKS-S 32M-02**	**115**
BCC00TY	**BKS-S 32M-05**	**115**
BCC00TZ	**BKS-S 32M-10**	**115**
BCC00UR	**BKS-S 33M-02**	**117**
BCC00UU	**BKS-S 33M-05**	**117**
BCC00UW	**BKS-S 33M-10**	**117**
BCC00YE	**BKS-S115-PU-02**	**117**
BCC00YF	**BKS-S115-PU-05**	**117**
BCC00YH	**BKS-S115-PU-10**	**117**
BCC0F4J	**BCC HB75-0000-PA-121-VX85B5-020**	**119**
BCC0F4K	**BCC HB75-0000-PA-121-VX85B5-050**	**119**
BCC0F4L	**BCC HB75-0000-PA-121-VX85B5-100**	**119**
BCC0KL6	**BCC Z032-0000-10-148-VS0CT4-050**	**119**
BCC0KL7	**BCC Z032-0000-10-148-VS0CT4-100**	**119**
BCC0KL8	**BCC Z032-0000-10-148-VS0CT4-200**	**119**
BAM01HL	**BIS U-500-EF-01**	**121**
BAM01HM	**BIS U-500-EF-02**	**121**
BAM01YR	**BIS U-500-EF-03**	**121**
BAM01HN	**BIS U-500-EF-05**	**121**
BAM01HP	**BIS U-500-EF-10**	**121**
BAM01WN	**BIS U-500-EF-15**	**121**
BAM01WP	**BIS U-500-EF-20**	**123**
BCC0L2Y	**BCC M415-M415-3L-386-PX85A5-006**	**123**
BCC0L2Z	**BCC M415-M415-3L-386-PX85A5-020**	**123**
BCC0L30	**BCC M415-M415-3L-386-PX85A5-050**	**123**
BCC0L31	**BCC M415-M415-3L-386-PX85A5-100**	**123**
BCC0L32	**BCC M415-M415-3L-386-PX85A5-150**	**123**
BCC0L3H	**BCC M415-M425-3L-386-PX85A5-006**	**125**
BCC0L3J	**BCC M415-M425-3L-386-PX85A5-020**	**125**
BCC0L3K	**BCC M415-M425-3L-386-PX85A5-050**	**125**
BCC0L3L	**BCC M415-M425-3L-386-PX85A5-100**	**125**
BCC0L3M	**BCC M415-M425-3L-386-PX85A5-150**	**125**
BCC0L3N	**BCC M425-M415-3L-386-PX85A5-006**	**125**
BCC0L3P	**BCC M425-M415-3L-386-PX85A5-020**	**127**
BCC0L3R	**BCC M425-M415-3L-386-PX85A5-050**	**127**
BCC0L3T	**BCC M425-M415-3L-386-PX85A5-100**	**127**
BCC0L3U	**BCC M425-M415-3L-386-PX85A5-150**	**127**
BCC0L33	**BCC M425-M425-3L-386-PX85A5-006**	**127**
BCC0L34	**BCC M425-M425-3L-386-PX85A5-020**	**127**

BCC0L35	**BCC M425-M425-3L-386-PX85A5-050**	**129**
BCC0L36	**BCC M425-M425-3L-386-PX85A5-100**	**129**
BCC0L37	**BCC M425-M425-3L-386-PX85A5-150**	**129**
BCC00R8	**BIS Z-501-PU1-02/M**	**129**
BCC00R9	**BIS Z-501-PU1-05/E**	**129**
BCC00RA	**BIS Z-501-PU1-05/M**	**129**
BCC00RC	**BIS Z-501-PU1-10/E**	**131**
BCC088T	**BCC M62C-M41C-3E-675-PX0C25-010**	**131**
BCC088U	**BCC M62C-M41C-3E-675-PX0C25-020**	**131**
BCC0LUK	**BCC M414-M415-3L-304-PX04A5-006**	**131**
BCC0LUL	**BCC M414-M415-3L-304-PX04A5-020**	**131**
BCC0LUM	**BCC M414-M415-3L-304-PX04A5-050**	**131**
BCC0LUN	**BCC M414-M415-3L-304-PX04A5-100**	**133**
BCC0LUP	**BCC M414-M415-3L-304-PX04A5-150**	**133**
BCC0LW0	**BCC M424-M425-3L-304-PX04A5-006**	**133**
BCC0LW1	**BCC M424-M425-3L-304-PX04A5-020**	**133**
BCC0LW2	**BCC M424-M425-3L-304-PX04A5-050**	**133**
BCC0LW3	**BCC M424-M425-3L-304-PX04A5-100**	**133**
BCC0LW4	**BCC M424-M425-3L-304-PX04A5-150**	**135**
BCC0JRY	**BCC S4B5-S4B4-3A-304-YX8434-006-C009**	**135**
BCC0KT3	**BCC S4B5-S4B4-3A-304-YX8434-010-C009**	**135**
BCC0JRZ	**BCC S4B5-S4B4-3A-304-YX8434-020-C009**	**135**
BCC0KRM	**BCC S4B5-S4B4-3A-304-YX8434-030-C009**	**135**
BCC0JT0	**BCC S4B5-S4B4-3A-304-YX8434-050-C009**	**135**
BCC0JT1	**BCC S4B5-S4B4-3A-304-YX8434-100-C009**	**137**
BCC0JT2	**BCC S4B5-S4B4-3A-304-YX8434-150-C009**	**137**
BCC0JT3	**BCC S4B5-S4B4-3A-304-YX8434-200-C009**	**137**
BCC0JTP	**BCC C3B4-C3B4-30-304-YX84A5-006-C009**	**137**
BCC0JTR	**BCC C3B4-C3B4-30-304-YX84A5-020-C009**	**137**
BCC0JTT	**BCC C3B4-C3B4-30-304-YX84A5-050-C009**	**137**
BCC0JTU	**BCC C3B4-C3B4-30-304-YX84A5-100-C009**	**139**
BCC0JTW	**BCC C3B4-C3B4-30-304-YX84A5-150-C009**	**139**
BCC0JTY	**BCC C3B4-C3B4-30-304-YX84A5-200-C009**	**139**
BCC0LNE	**BCC C3C4-C3C4-30-304-YX84A5-020-C009**	**139**
BCC0LNF	**BCC C3C4-C3C4-30-304-YX84A5-050-C009**	**139**
BCC0JT4	**BCC S4B5-S4B5-3A-313-YX8534-006-C009**	**139**
BCC0JT5	**BCC S4B5-S4B5-3A-313-YX8534-020-C009**	**141**
BCC0JT6	**BCC S4B5-S4B5-3A-313-YX8534-050-C009**	**141**
BCC0JT7	**BCC S4B5-S4B5-3A-313-YX8534-100-C009**	**141**
BCC0JT8	**BCC S4B5-S4B5-3A-313-YX8534-150-C009**	**141**
BCC0JT9	**BCC S4B5-S4B5-3A-313-YX8534-200-C009**	**141**
BCC0JTZ	**BCC C3B5-C3B5-30-335-YX85A5-006-C009**	**141**
BCC0JU0	**BCC C3B5-C3B5-30-335-YX85A5-020-C009**	**143**
BCC0JU1	**BCC C3B5-C3B5-30-335-YX85A5-050-C009**	**143**
BCC0JU2	**BCC C3B5-C3B5-30-335-YX85A5-100-C009**	**143**
BCC0JU3	**BCC C3B5-C3B5-30-335-YX85A5-150-C009**	**143**
BCC0JU4	**BCC C3B5-C3B5-30-335-YX85A5-200-C009**	**143**
BCC0JW3	**BCC S4B8-S4B8-3A-321-YX8825-006-C009**	**143**
BCC0JW4	**BCC S4B8-S4B8-3A-321-YX8825-020-C009**	**145**
BCC0JW5	**BCC S4B8-S4B8-3A-321-YX8825-050-C009**	**145**
BCC0JW6	**BCC S4B8-S4B8-3A-321-YX8825-100-C009**	**145**
BCC0JW7	**BCC S4B8-S4B8-3A-321-YX8825-150-C009**	**145**
BCC0KL9	**BCC U0AA-U019-90-736-Z19004-010**	**145**
BCC0KLA	**BCC U0AA-U019-90-736-Z19004-030**	**145**
BCC0KLC	**BCC U0AA-U019-90-736-Z19004-050**	**147**
BCC M414-M313-M313-U2026-_ _ _		**185**
BCC M414-M415-M415-U2028-_ _ _		**185**
BCC M414-M425-M425-U2028-_ _ _		**185**
BCC M414-M313-M313-U2012-_ _ _		**185**
BCC M414-M323-M323-U2012-_ _ _		**185**
BCC M414-M415-M415-U2010-_ _ _		**185**
BCC M414-M425-M425-U2010-_ _ _		**185**
BCC M414-M415-M415-U2002-_ _ _		**185**
BCC M414-M425-M425-U2002-_ _ _		**185**
BCC M415-VA04-VA04-U2005-_ _ _		**187**
BCC M415-VA04-VA04-U2004-_ _ _		**187**
BCC VA04-VA04-M415-T4075-_ _ _		**187**
BCC0AA5	**BCC A313-A313-A313-T0021-000**	**193**
BCC0AA6	**BCC A314-A314-A314-T0022-000**	**193**
BCC0AA7	**BCC A315-A315-A315-T0023-000**	**193**
BCC0F5C	**BCC M314-M313-M313-U0056-000**	**193**
BCC09JC	**BCC M415-M313-M313-U0014-000**	**195**
BCC089P	**BCC M415-M415-M415-U0003-000**	**195**
BCC08CA	**BCC M415-M415-M415-U0007-000**	**195**
BCC09MU	**BCC M415-M415-M415-U0016-000**	**195**
BCC0AT9	**BCC A333-0000-10-000-61X3A5-000**	**201**
BCC0ATA	**BCC A333-0000-10-000-71X3A5-000**	**201**
BCC0ATC	**BCC A333-0000-20-000-61X3A5-000**	**201**
BCC0ATE	**BCC A333-0000-20-000-71X3A5-000**	**201**
BCC0706	**BCC A334-0000-10-000-51X4A5-000**	**203**
BCC0707	**BCC A334-0000-10-000-61X4A5-000**	**203**
BCC0708	**BCC A334-0000-10-000-71X4A5-000**	**203**
BCC0709	**BCC A334-0000-20-000-51X4A5-000**	**203**
BCC070A	**BCC A334-0000-20-000-61X4A5-000**	**205**
BCC070C	**BCC A334-0000-20-000-71X4A5-000**	**205**
BCC070E	**BCC A335-0000-10-000-51X5A5-000**	**205**
BCC070F	**BCC A335-0000-10-000-61X5A5-000**	**205**
BCC070H	**BCC A335-0000-10-000-71X5A5-000**	**207**
BCC0ATH	**BCC A335-0000-10-000-81X5A5-000**	**207**
BCC070J	**BCC A335-0000-20-000-51X5A5-000**	**207**
BCC070K	**BCC A335-0000-20-000-61X5A5-000**	**207**
BCC070L	**BCC A335-0000-20-000-71X5A5-000**	**209**
BCC0ATF	**BCC A335-0000-20-000-81X5A5-000**	**209**
BCC0HLN	**BCC M333-0000-10-000-13X325-000**	**209**
BCC0HLU	**BCC M333-0000-10-000-13X350-000**	**209**
BCC06Z1	**BCC M333-0000-10-000-31X350-000**	**211**
BCC02HC	**BKS-S111-RT13**	**211**
BCC0HLP	**BCC M333-0000-20-000-13X325-000**	**211**
BCC0HLW	**BCC M333-0000-20-000-13X350-000**	**213**
BCC0E7N	**BCC M333-0000-20-000-31X350-000-C027**	**213**
BCC02HE	**BKS-S113-RT13**	**213**
BCC0HLR	**BCC M334-0000-10-000-13X425-000**	**213**
BCC0HLY	**BCC M334-0000-10-000-13X450-000**	**215**
BCC06Z5	**BCC M334-0000-10-000-31X450-000**	**215**
BCC02HF	**BKS-S216-RT14**	**215**
BCC0HLT	**BCC M334-0000-20-000-13X425-000**	**215**
BCC0HLZ	**BCC M334-0000-20-000-13X450-000**	**217**
BCC06Z7	**BCC M334-0000-20-000-31X450-000**	**217**
BCC02HH	**BKS-S218-RT14**	**217**
BCC06M4	**BCC M434-0000-2A-000-41X475-000**	**217**
BCC08C0	**BCC M434-0000-2A-000-43X434-000**	**219**
BCC0F9M	**BCC M434-0000-2A-000-45X450-000**	**219**
BCC06F7	**BCC M434-0000-2A-000-51X475-000**	**219**
BCC06Y5	**BCC M434-0000-2A-000-55X450-000**	**219**
BCC0869	**BCC M474-0000-2A-000-01X475-000**	**221**
BCC02H9	**BKS-S109-RT14**	**221**
BCC06ZC	**BCC M444-0000-2A-000-41X475-000**	**221**
BCC06ZE	**BCC M444-0000-2A-000-51X475-000**	**221**
BCC02H7	**BKS-S 77-RT04**	**223**
BCC06Z9	**BCC M435-0000-1A-000-41X475-000**	**223**
BCC06ZF	**BCC M435-0000-1A-000-41X575-000**	**223**
BCC06ZY	**BCC M435-0000-1A-000-43X434-000**	**223**
BCC0F9N	**BCC M435-0000-1A-000-45X450-000**	**225**
BCC06F6	**BCC M435-0000-1A-000-51X475-000**	**225**
BCC06W9	**BCC M435-0000-1A-000-51X575-000**	**225**
BCC06Y6	**BCC M435-0000-1A-000-55X450-000**	**225**
BCC09JP	**BCC M435-0000-1A-000-A1X575-000**	**227**
BCC06ZM	**BCC M475-0000-1A-000-01X475-000**	**227**
BCC06ZN	**BCC M475-0000-1A-000-01X575-000**	**227**
BCC02H8	**BKS-S107-RT14**	**227**
BCC06YA	**BCC M435-0000-2A-000-41X575-000**	**229**
BCC06EY	**BCC M435-0000-2A-000-51X575-000**	**229**
BCC09JW	**BCC M435-0000-2A-000-A1X575-000**	**229**
BCC086A	**BCC M475-0000-2A-000-01X575-000**	**229**
BCC06ZA	**BCC M445-0000-1A-000-41X475-000**	**231**
BCC06ZH	**BCC M445-0000-1A-000-41X575-000**	**231**

BCC06Y8	**BCC M445-0000-1A-000-51X475-000**	**231**
BCC06ZJ	**BCC M445-0000-1A-000-51X575-000**	**231**
BCC02H6	**BKS-S 76-RT04**	**233**
BCC06ZK	**BCC M445-0000-2A-000-41X575-000**	**233**
BCC06ZL	**BCC M445-0000-2A-000-51X575-000**	**233**
BCC0A03	**BCC M438-0000-1A-000-51X850-000**	**233**
BCC04MC	**BCC M478-0000-1A-000-43X834-000**	**235**
BCC0A04	**BCC M438-0000-2A-000-51X850-000**	**235**
BCC0HAH	**BCC M478-0000-2A-000-41X850-000**	**235**
BCC04ME	**BCC M488-0000-1A-000-43X834-000**	**235**
BCC0KR4	**BCC M488-0000-2A-000-01X850-000**	**237**
BCC0A05	**BCC M43C-0000-1A-000-54XC25-000**	**237**
BCC0A06	**BCC M43C-0000-2A-000-54XC25-000**	**237**
BCC0715	**BCC M475-0000-1B-000-01X575-000**	**237**
BCC0714	**BCC M475-0000-2B-000-01X575-000**	**239**
BCC0717	**BCC M485-0000-1B-000-01X575-000**	**239**
BCC0716	**BCC M485-0000-2B-000-01X575-000**	**239**
BCC03Y1	**BCC M474-0000-1D-000-51X475-000**	**239**
BCC03WZ	**BCC M474-0000-2D-000-51X475-000**	**241**
BCC03Y2	**BCC M484-0000-1D-000-51X475-000**	**241**
BCC03Y0	**BCC M484-0000-2D-000-51X475-000**	**241**
BCC0HTL	**BCC M478-0000-2X-000-E3X8T2-000**	**241**
BCC00TT	**BKS-S 32M-00**	**243**
BCC00UP	**BKS-S 33M-00**	**243**
BCC06FH	**BCC E834-0000-20-000-53X4T2-000**	**243**
BCC0A7M	**BCC A353-A353-30-RN036-000**	**257**
BCC0723	**BCC A354-A354-30-RN011-000**	**257**
BCC0A7N	**BCC A355-A355-30-RN037-000**	**257**
BCC06YP	**BCC M454-M454-5D-RM002-000**	**257**
BCC085F	**BCC M414-E814-BG-RM013-000**	**257**
BCC085H	**BCC M424-E814-BG-RM013-000**	**257**
BCC0E63	**BCC A354-0000-10-RN010-006**	**263**
BCC0720	**BCC A354-0000-10-RN010-020**	**263**
BCC098M	**BCC A355-0000-10-RN022-006**	**263**
BCC098N	**BCC A355-0000-10-RN022-020**	**263**
BCC0CU2	**BCC A353-0000-10-RN057-006**	**263**
BCC0CU3	**BCC A353-0000-10-RN057-020**	**263**
BCC0CU6	**BCC A354-0000-10-RN059-006**	**263**
BCC0CU7	**BCC A354-0000-10-RN059-020**	**263**
BCC0E64	**BCC A354-0000-20-RN010-006**	**265**
BCC0722	**BCC A354-0000-20-RN010-020**	**265**
BCC098P	**BCC A355-0000-20-RN022-006**	**265**
BCC098R	**BCC A355-0000-20-RN022-020**	**265**
BCC0CU4	**BCC A353-0000-20-RN057-006**	**265**
BCC0CU5	**BCC A353-0000-20-RN057-020**	**265**
BCC0CU9	**BCC A354-0000-20-RN059-006**	**265**
BCC0CUA	**BCC A354-0000-20-RN059-020**	**265**
BCC0E4Y	**BCC M353-0000-10-RM049-005**	**267**
BCC0E4Z	**BCC M353-0000-10-RM049-020**	**267**
BCC0E35	**BCC M354-0000-10-RM050-005**	**267**
BCC0E38	**BCC M354-0000-10-RM050-020**	**267**
BCC0E50	**BCC M353-0000-20-RM049-005**	**267**
BCC0E51	**BCC M353-0000-20-RM049-020**	**267**
BCC0E2Z	**BCC M354-0000-20-RM050-005**	**267**
BCC0E32	**BCC M354-0000-20-RM050-020**	**267**
BCC09JZ	**BCC M455-0000-1A-RM014-005**	**269**
BCC0E54	**BCC M455-0000-1A-RM014-020**	**269**
BCC099C	**BCC M455-0000-1A-RM020-005**	**269**
BCC0CAE	**BCC M455-0000-1A-RM020-020**	**269**
BCC0E55	**BCC M458-0000-1A-RM015-005**	**269**
BCC0E56	**BCC M458-0000-1A-RM015-020**	**269**
BCC0E59	**BCC M45C-0000-1A-RM081-005**	**269**
BCC0E5A	**BCC M45C-0000-1A-RM081-020**	**269**
BCC0CZ0	**BCC M454-0000-1A-RN060-006**	**271**
BCC0CZ1	**BCC M454-0000-1A-RN060-020**	**271**
BCC0CZ8	**BCC M455-0000-1A-RN063-006**	**271**
BCC0CZ9	**BCC M455-0000-1A-RN063-020**	**271**
BCC0E1K	**BCC M458-0000-1A-RN066-006**	**271**
BCC0E1L	**BCC M458-0000-1A-RN066-020**	**271**
BCC0CWL	**BCC M454-0000-1A-RN053-006**	**271**
BCC0CWM	**BCC M454-0000-1A-RN053-020**	**271**
BCC0CZ6	**BCC M455-0000-1A-RN054-006**	**273**
BCC0CZ7	**BCC M455-0000-1A-RN054-020**	**273**
BCC0CYY	**BCC M458-0000-1A-RN056-006**	**273**
BCC0CYZ	**BCC M458-0000-1A-RN056-020**	**273**
BCC099A	**BCC M454-0000-2A-RM020-005**	**273**
BCC0E53	**BCC M454-0000-2A-RM020-020**	**273**
BCC09K0	**BCC M455-0000-2A-RM014-005**	**273**
BCC0E5F	**BCC M455-0000-2A-RM014-020**	**273**
BCC0E57	**BCC M458-0000-2A-RM015-005**	**275**
BCC0E58	**BCC M458-0000-2A-RM015-020**	**275**
BCC0E5C	**BCC M45C-0000-2A-RM081-005**	**275**
BCC0E5E	**BCC M45C-0000-2A-RM081-020**	**275**
BCC0CZ4	**BCC M454-0000-2A-RN060-006**	**275**
BCC0CZ5	**BCC M454-0000-2A-RN060-020**	**275**
BCC0CYR	**BCC M455-0000-2A-RN063-006**	**275**
BCC0CYT	**BCC M455-0000-2A-RN063-020**	**275**
BCC0E1M	**BCC M458-0000-2A-RN066-006**	**277**
BCC0CYK	**BCC M458-0000-2A-RN066-020**	**277**
BCC0CZ2	**BCC M454-0000-2A-RN053-006**	**277**
BCC0CZ3	**BCC M454-0000-2A-RN053-020**	**277**
BCC0CYN	**BCC M455-0000-2A-RN054-006**	**277**
BCC0CYP	**BCC M455-0000-2A-RN054-020**	**277**
BCC0CYC	**BCC M458-0000-2A-RN056-006**	**277**
BCC0CYE	**BCC M458-0000-2A-RN056-020**	**277**
BCC0HKZ	**BCC VA04-M415-3E-RA125-000**	**287**
BCC0F47	**BCC M313-M413-3E-RA101-000**	**287**
BCC0F2Y	**BCC M314-M414-3E-RA102-000**	**287**
BCC0F2T	**BCC M415-M313-3F-RA101-000**	**287**
BCC0F2U	**BCC M415-M314-3F-RA102-000**	**287**
BCC06Y4	**BCC M415-0000-2A-R03**	**293**
BCC0A0A	**BCC A315-0000-1A-R04**	**293**
BCC0A09	**BCC A315-0000-2A-R04**	**293**
BCC0A08	**BCC M415-0000-1A-R04**	**293**
BCC09MR	**BCC M415-0000-2A-R04**	**293**
BCC0C6E	**BCC M415-0000-1B-R01**	**293**
BCC0718	**BCC M415-0000-2B-R01**	**293**
	BPI 4M3030-5K-B0-KPX60-_ _ _	**299**
	BPI 6M3030-5K-B0-KPX80-_ _ _	**299**
	BPI 8M3030-5K-B0-KPXA0-_ _ _	**299**
	BPI AM3030-5K-B0-KPXC0-_ _ _	**299**
	BPI 4M303P-5K-B0-KPX60-_ _ _	**299**
	BPI 6M303P-5K-B0-KPX80-_ _ _	**299**
	BPI 8M303P-5K-B0-KPXA0-_ _ _	**299**
	BPI AM303P-5K-B0-KPXC0-_ _ _	**299**
	BPI 4M3040-5K-B0-KPXA0-_ _ _	**299**
	BPI 6M3040-5K-B0-KPXE0-_ _ _	**299**
	BPI 8M3040-5K-B0-KPXK0-_ _ _	**299**
	BPI AM3040-5K-B0-KPXP0-_ _ _	**299**
	BPI 4M304P-5K-B0-KPXA0-_ _ _	**299**
	BPI 6M304P-5K-B0-KPXE0-_ _ _	**299**
	BPI 8M304P-5K-B0-KPXK0-_ _ _	**299**
	BPI AM304P-5K-B0-KPXP0-_ _ _	**299**
	BPI 4M3030-5K-B0-SM48T	**301**
	BPI 4M3030-5K-B0-SM4CT	**301**
	BPI 6M3030-5K-B0-SM48T	**301**
	BPI 6M3030-5K-B0-SM4CT	**301**
	BPI 4M303P-5K-B0-SM48T	**301**
	BPI 4M303P-5K-B0-SM4CT	**301**
	BPI 6M303P-5K-B0-SM48T	**301**
	BPI 6M303P-5K-B0-SM4CT	**301**
	BPI 4M3040-5K-B0-SM4CT	**301**
	BPI 4M304P-5K-B0-SM4CT	**301**
	BPI 8M3030-5K-B0-SM4CT	**303**
	BPI AM3030-5K-B0-SM4CT	**303**
	BPI 8M303P-5K-B0-SM4CT	**303**

BPI AM303P-5K-B0-SM4CT		**303**
BPI 4M4A40-2K-B0-KPX70-_ _ _		**305**
BPI 8M4A40-2K-B0-KPXB0-_ _ _		**305**
BPI 4M4A4P-2K-B0-KPX70-_ _ _		**305**
BPI 8M4A4P-2K-B0-KPXB0-_ _ _		**305**
BPI 4M4A50-2K-B0-KPXB0-_ _ _		**305**
BPI 8M4A50-2K-B0-KPXL0-_ _ _		**305**
BPI 4M4A5P-2K-B0-KPXB0-_ _ _		**305**
BPI 8M4A5P-2K-B0-KPXL0-_ _ _		**305**
BPI 4M4A40-2K-B0-SM6CT		**307**
BPI 8M4A40-2K-B0-SM6CT		**307**
BPI 4M4A4P-2K-B0-SM6CT		**307**
BPI 8M4A4P-2K-B0-SM6CT		**307**
BPI 4M4A50-2K-B0-SM6LT		**307**
BPI 8M4A50-2K-B0-SM6LT		**307**
BPI 4M4A5P-2K-B0-SM6LT		**307**
BPI 8M4A5P-2K-B0-SM6LT		**307**
BPI 4M4A4P-2K-00-TPS9		**309**
BPI 8M4A4P-2K-00-TPSE		**309**
BPI 4M4A5P-2K-00-TPSG		**309**
BPI 8M4A5P-2K-00-TPSN		**309**
BPI 4M4A4P-2K-00-TP09		**310**
BPI 8M4A4P-2K-00-TP0E		**310**
BPI 4M4A5P-2K-00-TP0G		**310**
BPI 8M4A5P-2K-00-TP0N		**310**
BPI T009-K-00-KPX70-_ _ _		**310**
BPI T00E-K-00-KPXB0-_ _ _		**310**
BPI T00G-K-00-KPXB0-_ _ _		**310**
BPI T00N-K-00-KPXL0-_ _ _		**310**
BPI T00G-K-00-KPXD0-_ _ _		**310**
BPI T00N-K-00-KPXN0-_ _ _		**310**
B AM01CF	**BOS R-40**	**333**
BAM01HF	**BOS R-45**	**333**
BAM00UM	**BOS R-12**	**333**
BAM00UY	**BOS R-22**	**333**
BAM01H9	**BOS R-41**	**333**
BAM023T	**BOS R-55**	**333**
BAM023U	**BOS R-56**	**333**
BAM00UN	**BOS R-13**	**333**
BAM00UT	**BOS R-16**	**335**
BAM01H7	**BOS R-38**	**335**
BAM01HA	**BOS R-42**	**335**
BAM01HC	**BOS R-43**	**335**
BAM0333	**BAM RF-XO-030-S000/04-PM-FA**	**335**
BAM00W6	**BOS R-32-0,40**	**335**
BAM00W9	**BOS R-35**	**335**
BAM01JM	**BOS R-50**	**335**
BAM00WC	**BOS R-6-0,25**	**337**
BAM00WE	**BOS R-6-45**	**337**
BAM02R3	**BOS R-60-22**	**337**
BAM00WF	**BOS R-7-0,25**	**337**
BAM00WH	**BOS R-7-22**	**337**
BAM00WJ	**BOS R-8-0,25**	**337**
BAM00WK	**BOS R-8-22**	**337**
BAM0330	**BAM RF-XO-025-S023/40-PM-AS**	**337**
BAM0331	**BAM RF-XO-026-S012/40-PM-AS**	**339**
BAM0332	**BAM RF-XO-027-S004/25-PM-AS**	**339**
BAM00UL	**BOS R-11**	**339**
BAM00W7	**BOS R-33**	**339**
BAM00W8	**BOS R-34**	**339**
BAM01CM	**BOS R-36**	**339**
BAM01HE	**BOS R-44**	**339**
BAM01JP	**BOS R-46**	**339**
BAM01JN	**BOS R-47**	**341**
BAM01LA	**BOS R-48**	**341**
BAM01NH	**BOS R-49**	**341**
BAM00WA	**BOS R-5**	**341**
BAM00WL	**BOS R-9**	**341**
BAM00UK	**BOS R-1**	**341**
BAM0126	**BOS R-10**	**341**
BAM00UP	**BOS R-14**	**341**
BAM00UR	**BOS R-15**	**343**
BAM00UW	**BOS R-2**	**343**
BAM00W4	**BOS R-3**	**343**
BAM01H6	**BOS R-31**	**343**
BAM00NM	**ADAPTER BFO 30-A1**	**351**
BAM00P0	**BFO 08,0-KB-1**	**351**
BAM000J	**BFO D10-LA-DC-10**	**351**
BAM00P1	**BFO D13-LA-EC-10**	**351**
BFO005F	**BFO D22-LA-AC-20**	**351**
BFO005J	**BFO D22-LA-BC-10**	**351**
BFO005L	**BFO D22-LA-CC-30**	**351**
BAM00PW	**BOS 12-BL-1**	**351**
BAM00R6	**BOS 18-BL-1**	**353**
BAM00R7	**BOS 18-BL-2**	**353**
BAM00TU	**BOS 5-BL-1**	**353**
BAM00TW	**BOS 5-BL-2**	**353**
BAM00TY	**BOS 5-BL-3**	**353**
BAM00TZ	**BOS 5-BL-4**	**353**
BAM00U0	**BOS 5-BL-5**	**353**
BAM00U1	**BOS 5-BL-6**	**353**
BAM00U2	**BOS 5-BL-7**	**355**
BAM00U3	**BOS 5-BL-8**	**355**
BAM00U4	**BOS 5-BL-9**	**355**
BAM02PM	**BOS 6-BL-1**	**355**
BAM029R	**BAM LS-VS-004-C2/3-0614-2**	**355**
BAM02FA	**BAM LS-VS-004-C2/3-0814-2**	**355**
BAM02FC	**BAM LS-VS-004-C2/3-1214-2**	**355**
BAM02FE	**BAM LS-VS-004-C2/3-1614-2**	**355**
BAM02FF	**BAM LS-VS-004-C2/3-2514-2**	**357**
BAM02FH	**BAM LS-VS-004-C2/3-3514-2**	**357**
BAM02FJ	**BAM LS-VS-004-C2/3-5014-2**	**357**
BAM02Y3	**BAM LS-VS-004-C2/3-7532-2**	**357**
BAM03H1	**BAM LS-VS-008-C2/3-0528-5**	**357**
BAM03H2	**BAM LS-VS-008-C2/3-0814-5**	**357**
BAM03H3	**BAM LS-VS-008-C2/3-1214-5**	**357**
BAM03H4	**BAM LS-VS-008-C2/3-1614-5**	**357**
BAM03H5	**BAM LS-VS-008-C2/3-2514-5**	**359**
BAM03H6	**BAM LS-VS-008-C2/3-3520-5**	**359**
BAM03H7	**BAM LS-VS-008-C2/3-5028-5**	**359**
BAM03MN	**BAM LS-VS-009-C1/1-0625-O**	**359**
BAM03MP	**BAM LS-VS-009-C1/1-0825-O**	**359**
BAM03MR	**BAM LS-VS-009-C1/1-1218-O**	**359**
BAM03MT	**BAM LS-VS-009-C1/1-1618-O**	**359**
BAM03MU	**BAM LS-VS-009-C1/1-2518-O**	**359**
BAM03MW	**BAM LS-VS-009-C1/1-3518-O**	**361**
BAM03MY	**BAM LS-VS-009-C1/1-5018-O**	**361**
BAM02MT	**BAM SP-XO-002-0,5-40-31-A**	**361**
BAM01A7	**BAM OF-VS-001-D-RX100**	**361**
BAM02FR	**BAM OF-VS-002-BU-27**	**361**
BAM02FZ	**BAM OF-VS-002-BU-30**	**361**
BAM02FP	**BAM OF-VS-002-GN-27**	**361**
BAM02FY	**BAM OF-VS-002-GN-30**	**361**
BAM02MN	**BAM OF-VS-002-IR-27**	**363**
BAM02MP	**BAM OF-VS-002-IR-30**	**363**
BAM02MR	**BAM OF-VS-002-IR-40**	**363**
BAM02FK	**BAM OF-VS-002-PL-27**	**363**
BAM02FT	**BAM OF-VS-002-PL-30**	**363**
BAM02H0	**BAM OF-VS-002-PL-40**	**363**
BAM02FM	**BAM OF-VS-002-RD-27**	**363**
BAM02FW	**BAM OF-VS-002-RD-30**	**363**
BAM02FL	**BAM OF-VS-002-UV-27**	**365**
BAM02FU	**BAM OF-VS-002-UV-30**	**365**
BAM02H1	**BAM OF-VS-002-UV-40**	**365**
BAM02FN	**BAM OF-VS-002-YE-27**	**365**
BAM01U2	**BAM LS-FO-002-F**	**365**

BAM020P	**BAM LS-FO-003-M6-L**	**365**
BAM030N	**BAM LS-FO-005-U1-22**	**365**
BAM00NN	**BFO 02-PK-1**	**365**
BAM00NR	**BFO 04-FL-1**	**367**
BAM00NT	**BFO 04-FL-2**	**367**
BAM00NW	**BFO 04-PK-1**	**367**
BAM0120	**BKT M-PK-1**	**367**
BAM0121	**BKT M-PK-2**	**367**
BAM0122	**BKT M-PK-3**	**367**
BAM00P2	**BKT M-PK-4**	**367**
BAM00P3	**BKT M-PK-5**	**367**
BAM00NP	**BFO 02-UK-1**	**369**
BAM00R0	**BOS 12-WS-1**	**369**
BAM00R1	**BOS 12-WS-2**	**369**
BAM00RP	**BOS 18-UK-1**	**369**
BAM00RR	**BOS 18-UK-10**	**369**
BAM00RT	**BOS 18-UK-2**	**369**
BAM00RU	**BOS 18-WS-1**	**369**
BAM01ET	**BAM AP-US-001-M12-0**	**369**
BAM01YU	**BAM AP-US-004-R06-Y**	**371**
BAM01HJ	**BAM AP-US-002-M18-0**	**371**
BAM01EP	**BAM BD-US-001-D20-4**	**371**
BAM01ER	**BAM BD-US-001-D32-4**	**371**
BAM0183	**BKS-PW-26/20-SI-TR-03,5**	**385**
BAM0182	**BKS-PW-51/30-SI-TR-11**	**385**
BAM021E	**BAM PT-XA-005-260-T-R20**	**385**
BAM021F	**BAM PT-XA-005-510-T-R20**	**385**
BAM02E3	**BAM PT-XA-006-M91-T-00,9**	**385**
BAM022Z	**BAM PT-XA-002-100-2-R15**	**385**
BAM0230	**BAM PT-XA-002-130-2-R15**	**385**
BAM01R2	**BAM PT-XA-002-127-2-30**	**385**
BAM0231	**BAM PT-XA-002-190-2-R15**	**385**
BAM01UY	**BAM PT-XA-002-190-2-30**	**385**
BAM0232	**BAM PT-XA-002-380-2-R15**	**385**
BAM0233	**BAM PT-XA-002-500-2-R15**	**385**
BAM017E	**BKS-PT-07/16-SI-15**	**385**
BAM0212	**BAM PT-XA-004-070-T-R16**	**385**
BAM017H	**BKS-PT-10/16-SI-15**	**385**
BAM0213	**BAM PT-XA-004-100-T-R16**	**387**
BAM017L	**BKS-PT-13/16-SI-15**	**387**
BAM0214	**BAM PT-XA-004-130-T-R16**	**387**
BAM017N	**BKS-PT-16/16-SI-15**	**387**
BAM0215	**BAM PT-XA-004-160-T-R16**	**387**
BAM0216	**BAM PT-XA-004-190-T-R16**	**387**
BAM017R	**BKS-PT-19/16-SI-15**	**387**
BAM017U	**BKS-PT-38/16-SI-07.5**	**387**
BAM017Z	**BKS-PT-50/16-SI-07.5**	**387**
BAM0217	**BAM PT-XA-004-500-T-R16**	**387**
BAM02JE	**BES 08-FA-17**	**391**
BAM009L	**BES 08-FA-49**	**391**
BAM009M	**BES 08-FA-89**	**391**
BAM00AZ	**BES 12-FA-70**	**391**
BAM009N	**BES 08-FA-BS-4,0-G**	**391**
BAM009P	**BES 08-FA-BS-4,0-W**	**391**
BAM009R	**BES 08-FA-BS-8,0-G**	**391**
BAM009T	**BES 08-FA-BS-8,0-W**	**391**
BAM01AZ	**BAM FS-XE-001-M5-4**	**393**
BAM019Y	**BAM FS-XE-003-M5-4**	**393**
BAM019W	**BAM FS-XE-004-M8-4**	**393**
BAM01C0	**BAM FS-XE-002-D4-4**	**393**
SET0167	**BAV BP-PH-00100-01**	**393**
SET0168	**BAV BP-PH-00100-02**	**393**
SET017U	**BAV BP-PH-00100-11**	**393**
SET016C	**BAV BP-PH-00102-01**	**393**
SET016E	**BAV BP-PH-00102-02**	**395**
SET0180	**BAV BP-PH-00102-11**	**395**
SET0181	**BAV BP-PH-00102-12**	**395**
SET0169	**BAV BP-PH-00101-01**	**395**
SET016A	**BAV BP-PH-00101-02**	**395**
SET017Y	**BAV BP-PH-00101-11**	**395**
SET017Z	**BAV BP-PH-00101-12**	**395**
SET015A	**BAV BP-PH-00093-01**	**395**
SET015F	**BAV BP-PH-00093-02**	**397**
SET017R	**BAV BP-PH-00093-11**	**397**
SET017T	**BAV BP-PH-00093-12**	**397**
BAM025T	**BAM TG-AM-015-001**	**397**
BAM02YU	**BAM TG-AM-015-006**	**397**
BAM02JW	**BAM TG-AM-015-004**	**397**
BAM02JY	**BAM TG-AM-015-005**	**397**
BAM02JU	**BAM TG-AM-015-003**	**397**
BAM027T	**BAM TG-AM-015-002**	**399**
BAM0260	**BAM FS-XE-005-M8-2-01T**	**399**
BAM025U	**BAM FS-XE-005-M8-2-01P**	**399**
BAM025W	**BAM FS-XE-005-M8-2-01F**	**399**
BAM022W	**BAM FS-XE-005-M8-2-01R**	**399**
BAM02R5	**BAM PC-XE-028-M8-9**	**405**
BAM009Z	**BES 08-SM-1**	**405**
BAM00A0	**BES 08-SM-1F**	**405**
BAM02KM	**BAM CS-XA-001-M12-5**	**405**
BAM02R6	**BAM PC-XE-028-M12-9**	**405**
BAM00C2	**BES 12-SM-2**	**405**
BAM00EP	**BES 16-SM-2**	**405**
BAM02R7	**BAM PC-XE-028-M18-9**	**405**
BAM00EZ	**BES 18-SM-1**	**405**
BAM00F0	**BES 18-SM-2**	**405**
BAM00F1	**BES 18-SM-3**	**405**
BAM00H8	**BES 22-SM-2**	**405**
BAM012P	**BKS-23-CS-00**	**405**
BAM02R8	**BAM PC-XE-028-M30-9**	**405**
BAM00HJ	**BES 30-SM-1**	**405**
BAM00HK	**BES 30-SM-2**	**405**
BAM00HL	**BES 30-SM-3**	**407**
BAM00HM	**BES 30-SM-5**	**407**
BAM00JL	**BES 36-SM-2**	**407**
BAM02TU	**BAM CS-XA-001-M12-2**	**407**
BAM029N	**BAM AN-AM-001-01-1**	**413**
BAM00PY	**BOS 12-LT-1**	**413**
BAM00R9	**BOS 18-LT-1**	**413**
BAM01LE	**BAM CS-XA-004-U7/8-A**	**413**
BAM01LF	**BAM CS-XA-005-U7/8-A**	**413**
BAM01YN	**BAM CS-XA-008-M12-4**	**413**
BAM02WF	**BAM PC-XE-034-Q40-1**	**413**
BAM01LJ	**BAM PC-US-007-M18-2/W**	**413**
BAM024W	**BAM PC-VS-017-1**	**413**
BAM02NA	**BAM PC-VS-023-1**	**413**
BAM02W0	**BAM PC-VS-023-1-01**	**413**
BAM029L	**BAM PC-OS-024-23K-1**	**413**
BAM029M	**BAM PC-OS-025-23K-1**	**415**
BAM029K	**BAM PC-OS-026-23K-1**	**415**
BAM029C	**BAM PC-OS-024-50K-1**	**415**
BAM02H4	**BAM PC-OS-025-50K-1**	**415**
BAM029P	**BAM PC-OS-026-50K-1**	**415**
BAM01RR	**BAM PC-VS-008-1**	**415**
BAM01Y5	**BAM PC-XO-005-08M-4**	**415**
BAM01Y6	**BAM PC-XO-005-12M-4**	**415**
BAM01NC	**BAM PC-XO-005-18M-4**	**415**
BAM00RL	**BOS 18-SM-1**	**415**
BAM01L8	**BAM PC-XO-006-23K-1**	**415**
BAM01YL	**BAM PC-XO-006-23K-G/RK**	**415**
BAM01C1	**BAM CS-XA-001-M8-C**	**417**
BAM01C2	**BAM CS-XA-002-M12-A**	**417**
BAM0114	**BKS-12-CS-01**	**417**
BAM0115	**BKS-12-CS-02**	**417**
BAM012T	**BKS-7/8-CS-00-A**	**417**
BAM0206	**BAM FK-VS-002-03-1**	**423**
BAM015U	**BESA-08-CM**	**425**

BAM015W	**BESA-12-CM**	**425**
BAM015Y	**BESA-18-CM**	**425**
BAM015Z	**BESA-30-CM**	**425**
BAM00NU	**BFO 04-FS-1**	**425**
SET011L	**BAV BP-PH-00064-01**	**431**
SET011M	**BAV BP-PH-00065-01**	**431**
SET01NU	**BAV BP-PH-00180-01**	**431**
SET01U1	**BAV BP-PH-00214-01**	**431**
SET01KE	**BAV DG-PH-00096-01**	**431**
BAM033K	**BMS AD-M-004-X19/MIS-D**	**431**
BAM024R	**BMS CCJ-M-D12-B-01**	**431**
BAM024P	**BMS CU-M-D12-B028-00**	**431**
BAM0275	**BMS CU-M-D12-B040-00**	**431**
BAM02JT	**BMS CU-M-D12-B040-02**	**431**
BAM03EU	**BMS CU-M-D12-E038-01**	**431**
BAM03EW	**BMS CU-M-D12-E038-02**	**431**
BAM033U	**BMS CU-M-D30-E040-00**	**431**
BAM002J	**BMS CU-P-D12-A040-00**	**431**
BAM034K	**BMS CUJ-M-D30-E057-00**	**431**
BAM034L	**BMS CUJ-M-D30-E060-01**	**431**
BAM002Y	**BMS CUJ-P-D12-R040-00**	**433**
BAM0044	**BMS CU-M-D12-I060-01**	**433**
BAM01CH	**BMS CU-M-D12-I060-02**	**433**
BAM03CF	**BAM IA-XA-034-M08-A-4**	**433**
BAM03CH	**BAM IA-XA-034-M12-A-5**	**433**
BAM03AK	**BAM IA-XA-033-01-R**	**433**
BAM03AL	**BAM IA-XA-033-02-R**	**433**
BAM03AM	**BAM IA-XA-033-03-R**	**433**
BAM03AN	**BAM IA-XA-033-04-R**	**433**
BAM032T	**BAM IA-XA-031-200-R**	**433**
BAM0031	**BMS CS-M-D12-IZ**	**433**
BAM003Y	**BMS CS-M-D12-IZ-01**	**433**
BAM035N	**BMS CS-M-D12-IZ-02**	**433**
BAM035A	**BMS CS-M-D30-BZ-03**	**433**
BAM002Z	**BMS CC-M-D12-B-00**	**433**
BAM035P	**BMS CC-M-D12-B-03**	**433**
BAM03EY	**BMS CC-M-D12-E-01**	**435**
BAM033W	**BMS CC-M-D30-E-00**	**435**
BAM033Y	**BMS CC-M-D30-E-01**	**435**
BAM003U	**BMS CC-P-D10-A-00**	**435**
BAM002M	**BMS CC-P-D12-A-00**	**435**
BAM01CW	**BMS CS-M-D12-BX08-07**	**435**
BAM0343	**BMS CSJ-M-D30-EX19-02**	**435**
BAM003T	**BMS CASE-01**	**435**
BAM003W	**BMS KIT-V1**	**435**
BAM021Y	**BMS RS-M-D12-0100-00**	**435**
BAM002R	**BMS RS-M-D12-0150-00**	**435**
BAM021T	**BMS RS-M-D12-0200-00**	**435**
BAM002T	**BMS RS-M-D12-0250-00**	**435**
BAM021W	**BMS RS-M-D12-0300-00**	**435**
BAM021U	**BMS RS-M-D12-0750-00**	**435**
BAM002U	**BMS RS-M-D12-1000-00**	**435**
BAM033Z	**BMS RS-M-D30-0300-01**	**437**
BAM0340	**BMS RS-M-D30-0500-01**	**437**
BAM0341	**BMS RS-M-D30-1000-01**	**437**
BAM0045	**BMS RS-S-D12-0150-00**	**437**
BAM0046	**BMS RS-S-D12-0300-00**	**437**
BAM03F0	**BMS RS-S-D12-0400-00**	**437**
BAM03F1	**BMS RS-S-D12-0600-00**	**437**
BAM03F2	**BMS RS-S-D12-0800-00**	**437**
BAM003J	**BMS AD-M-003-D12/IZ**	**437**
BAM0041	**BMS CZ-M-D12-I-001**	**437**
BAM003A	**BMS BS-M-D12-0250-01**	**437**
BAM033T	**BMS BS-M-D12-0250-05**	**437**
BAM0035	**BMS CR-M-D12-IS-03**	**437**
BAM0042	**BMS CR-M-D12-IS-04**	**437**
BAM0034	**BMS CR-M-D12-IU-02**	**437**
BAM003N	**BMS CR-M-D12-IU-05**	**437**
BAM002L	**BMS CR-P-D12-AU-00**	**439**
BAM0039	**BMS BS-M-D12-0250-02**	**439**
BAM003F	**BMS BS-M-D12-0250-03**	**439**
BAM003H	**BMS BS-M-D12-0400-04**	**439**
BAM0043	**BMS CS-M-D12-B21K-04**	**439**
BAM01AW	**BMS CS-M-D12-B23K-05**	**439**
BAM003C	**BMS CS-M-D12-BX05-02**	**439**
BAM0040	**BMS CS-M-D12-BX06-03**	**439**
BAM01AY	**BMS CS-M-D12-BX07-06**	**441**
BAM01F3	**BMS CS-M-D12-BX10-08**	**441**
BAM01F2	**BMS CS-M-D12-BX11-09**	**441**
BAM0277	**BMS CS-M-D12-BX17-11**	**441**
BAM024T	**BMS CS-M-D12-BZ**	**441**
BAM0036	**BMS CS-M-D12-ID08-01**	**441**
BAM0037	**BMS CS-M-D12-ID12-01**	**441**
BAM003K	**BMS CS-M-D12-ID16-01**	**441**
BAM0032	**BMS CS-M-D12-ID18-01**	**441**
BAM003L	**BMS CS-M-D12-ID24-01**	**441**
BAM0033	**BMS CS-M-D12-ID30-01**	**441**
BAM003M	**BMS CS-M-D12-ID36-01**	**441**
BAM003P	**BMS CS-M-D12-IQ40-02**	**441**
BAM003R	**BMS CS-M-D12-IQ40-03**	**441**
BAM01UL	**BMS CS-M-D12-IX14-01**	**441**
BAM002K	**BMS CS-P-D12-AD08-00**	**441**
BAM002N	**BMS CS-P-D12-AD12-00**	**443**
BAM002P	**BMS CS-P-D12-AD18-00**	**443**
BAM0099	**BES 05,0-KH-2S**	**455**
BAM0313	**BAM MC-XA-023-D08,0-2-FS**	**455**
BAM0318	**BAM MC-XA-023-D08,0-2-FXL/W**	**455**
BAM0310	**BAM MC-XA-023-D08,0-4-FS/W**	**455**
BAM00AE	**BES 08,0-KH-2L**	**455**
BAM00AH	**BES 08,0-KH-2S**	**455**
BAM00AK	**BES 08,0-KH-2S/W**	**455**
BAM00AL	**BES 08,0-KH-3L**	**455**
BAM00AR	**BES 08,0-KH-6S**	**455**
BAM01UT	**BAM MC-XA-020-D12,0-2-FS/W**	**455**
BAM0247	**BAM MC-XA-023-D12,0-2-FM/W**	**455**
BAM0246	**BAM MC-XA-023-D12,0-2-FS**	**455**
BAM024E	**BAM MC-XA-024-D12,0-2-FM/W**	**455**
BAM024F	**BAM MC-XA-024-D12,0-2-FXL/W**	**455**
BAM00CY	**BES 12,0-KH-2L**	**455**
BAM00CZ	**BES 12,0-KH-2L/W**	**455**
BAM00E0	**BES 12,0-KH-2S**	**457**
BAM00E1	**BES 12,0-KH-2S/W**	**457**
BAM00E2	**BES 12,0-KH-3L**	**457**
BAM022L	**BAM MC-XA-023-D18,0-2-FL**	**457**
BAM022K	**BAM MC-XA-023-D18,0-2-FS**	**457**
BAM022M	**BAM MC-XA-024-D18,0-2-FM/W**	**457**
BAM00FN	**BES 18,0-KH-2L**	**457**
BAM00FP	**BES 18,0-KH-2L/W**	**457**
BAM00FR	**BES 18,0-KH-2M**	**457**
BAM00FT	**BES 18,0-KH-2S**	**457**
BAM00FW	**BES 18,0-KH-2S/W**	**457**
BAM00FY	**BES 18,0-KH-3L**	**457**
BAM0264	**BAM MC-XA-023-D30,0-2-FS**	**457**
BAM0265	**BAM MC-XA-023-D30,0-2-FXL**	**457**
BAM024C	**BAM MC-XA-023-D30,0-2-FXL/W**	**457**
BAM024H	**BAM MC-XA-024-D30,0-2-FM/W**	**457**
BAM00J4	**BES 30,0-KH-2L**	**459**
BAM00J5	**BES 30,0-KH-2L/W**	**459**
BAM00J6	**BES 30,0-KH-2S**	**459**
BAM00J7	**BES 30,0-KH-2S/W**	**459**
BAM02P1	**BAM MC-CS-043-R08-R-01**	**465**
BAM02P2	**BAM MC-CS-043-R08-R-02**	**465**
BAM037T	**BAM MC-XA-054-D02,0-4**	**465**
BAM000T	**BAM MC-XA-002-D03,0-2**	**465**
BAM037U	**BAM MC-XA-054-D03,0-4**	**465**
BAM000U	**BAM MC-XA-002-D04,0-2**	**465**

BAM037W	**BAM MC-XA-054-D04,0-4**	**465**
BAM037Y	**BAM MC-XA-054-D05,0-4**	**465**
BAM000W	**BAM MC-XA-002-D06,5-2**	**465**
BAM000Y	**BAM MC-XA-002-D08,0-2**	**465**
BAM0349	**BAM MC-XA-049-D18,0-5**	**465**
BAM034A	**BAM MC-XA-049-D30,0-5**	**465**
BAM009A	**BES 06,5-BS-1**	**469**
BAM0269	**BAM MC-XA-027-D08,0-1**	**469**
BAM00A2	**BES 08,0-BS-1**	**469**
BAM0218	**BAM MC-XA-027-D12,0-1**	**469**
BAM00C4	**BES 12,0-BS-1**	**469**
BAM00EM	**BES 14,5-BS-1**	**469**
BAM00ET	**BES 16,0-BS-1**	**469**
BAM0219	**BAM MC-XA-027-D18,0-1**	**469**
BAM00F2	**BES 18,0-BS-1**	**469**
BAM00F3	**BES 18,0-BS-2**	**469**
BAM0327	**BAM MC-XA-027-D20,0-1**	**469**
BAM0377	**BAM MC-XA-053-D20,0-1**	**469**
BAM00H7	**BES 20,0-BS-1**	**469**
BAM01U0	**BAM MC-XA-017-D30,0-1**	**469**
BAM00HN	**BES 30,0-BS-1**	**469**
BAM035Y	**BAM FS-AM-011-D45,0-4**	**469**
BAM0379	**BAM MC-XA-050-D45,0-1**	**471**
BAM0360	**BAM MC-XE-051-D45,0-3**	**471**
BAM035Z	**BAM MC-XE-052-D45,0-1**	**471**
BAM00P0	**BFO 08,0-KB-1**	**471**
BAM02WA	**BAM MB-XE-031-Q40-A**	**471**
BAM034N	**BAM MB-XE-031-Q40-A-01**	**471**
BAM01TM	**BAM MC-XA-016-Q40-1**	**471**
BAM026J	**BAM MC-XA-032-Q40-1**	**471**
BAM00JW	**BES Q40-HW-1**	**471**
BAM00JY	**BES Q40-HW-2**	**471**
BAM00JZ	**BES Q40-HW-3**	**471**
BAM00K3	**BES R04-MF-01**	**471**
BAM02Y5	**BAM MB-XA-029-D30,0-5**	**471**
BAM0158	**BES 516-MB-08**	**471**
BAM0159	**BES 516-MB-12**	**471**
BAM015A	**BES 516-MB-18**	**471**
BAM015C	**BES 516-MB-30**	**473**
BAM0092	**BES 03,0-KB-3**	**473**
BAM0094	**BES 04,0-KB-1**	**473**
BAM0095	**BES 04,0-KB-3**	**473**
BAM0097	**BES 05,0-KB-1**	**473**
BAM0098	**BES 05,0-KB-3**	**473**
BAM009C	**BES 06,5-KB-1**	**473**
BAM009E	**BES 06,5-KB-3**	**473**
BAM009F	**BES 06,5-KB-7**	**473**
BAM00A4	**BES 08,0-KB-10/W**	**473**
BAM00A5	**BES 08,0-KB-3**	**473**
BAM00A6	**BES 08,0-KB-3-F**	**473**
BAM00AA	**BES 08,0-KB-7**	**473**
BAM00AW	**BES 08,1-KB-4-F**	**473**
BAM00C6	**BES 12,0-KB-10/W**	**473**
BAM00C7	**BES 12,0-KB-2**	**473**
BAM00C9	**BES 12,0-KB-3**	**475**
BAM00CA	**BES 12,0-KB-3-F**	**475**
BAM00CF	**BES 12,0-KB-4-F**	**475**
BAM00EK	**BES 12.0-KB-9S**	**475**
BAM01KM	**BOS 12,0-KB-1**	**475**
BAM00F5	**BES 18,0-KB-10/W**	**475**
BAM00F7	**BES 18,0-KB-3**	**475**
BAM00F8	**BES 18,0-KB-3-F**	**475**
BAM00FC	**BES 18,0-KB-4-F**	**475**
BAM00FE	**BES 18,0-KB-5-F**	**475**
BAM00T3	**BOS 18,0-KB-1**	**475**
BAM00HR	**BES 30,0-KB-10/W**	**475**
BAM00HU	**BES 30,0-KB-3-F**	**475**
BAM00HW	**BES 30,0-KB-4-F**	**475**
BAM00HY	**BES 30,0-KB-5-F**	**475**
BAM00TN	**BOS 30,0-KB-1**	**475**
BAM02UE	**BAM MC-XA-014-Q08-2**	**477**
BAM00NJ	**BES Q08-KH-2**	**477**
BAM01AU	**BES Q08-KH-3**	**477**
BAM009U	**BES 08-HW-1**	**477**
BAM00C0	**BES 12-HW-1**	**477**
BAM00EY	**BES 18-HW-1**	**477**
BAM00HH	**BES 30-HW-1**	**477**
BAM0255	**BAM MB-NI-016-800-1**	**489**
BAM026K	**BAM MB-NI-017-100-1**	**489**
BAM034C	**BAM MB-NI-017-250-1**	**489**
BAM026L	**BAM MB-NI-017-400-1**	**489**
BAM02M5	**BAM MB-XA-025-D19,0-1**	**489**
BAM02J9	**BAM MD-VS-002-0002**	**493**
BAM02JA	**BAM MD-VS-002-0003**	**493**
BAM02JC	**BAM MD-VS-002-0004**	**493**
BAM02Y8	**BAM MD-VS-002-0005**	**493**
BAM02Y9	**BAM MD-VS-002-0006**	**493**
BAM02ZW	**BAM MB-MS-038-B19-1**	**493**
BAM01AC	**BAM MB-XA-003-B03-1**	**493**
BAM01TK	**BMS CS-M-D12-IX13-01**	**493**
BAM01YP	**BMS CS-M-S25-DX15-00**	**493**
BAM02ZU	**BMS CU-M-S25-D030-01**	**493**
BAM01YT	**BMS CUJ-M-S25-D045-00**	**493**
BAM00WN	**BVS Z-MB-01**	**493**
BAM02P7	**BAM MB-VS-026-B14-1**	**493**
BAM01AE	**BAM MB-XA-002-B02-1**	**493**
BAM02ML	**BAM MC-XA-042-D20,0-1**	**493**
BAM0127	**BIS C-122-AD-1**	**497**
BAM0128	**BIS C-122-AD-2**	**497**
BAM01LW	**BIS Z-SP-003**	**497**
BAM020R	**BIS Z-SP-004**	**497**
BAM01MY	**BAM MB-XA-010-B07-4**	**497**
BAM02PN	**BAM MB-XA-027-B15-4**	**497**
BAM01Y3	**BAM MC-XA-018-B04-4**	**497**
BAM012E	**BIS C-108-MF-01**	**497**
BAM012H	**BIS L-203-ZH1**	**497**
BAM012L	**BIS Z-HW-001**	**497**
BAM01FT	**BIS Z-HW-002**	**497**
BAM01JK	**BIS Z-HW-003**	**497**
BAM01KN	**BIS Z-HW-004**	**497**
BAM0336	**BIS Z-HW-008**	**497**
BAM0337	**BIS Z-HW-009**	**497**
BAM012M	**BIS Z-MP-001**	**497**
BAM012N	**BIS Z-ZA-001**	**499**
BAM012A	**BIS C-300-HG1**	**499**
BAM012J	**BIS Z-HG-002**	**499**
BAM012K	**BIS Z-HG-003**	**499**
BAM02NM	**BAM BD-LG-003-0900**	**505**
BAM02NN	**BAM BD-LG-003-1200**	**505**
BAM02NP	**BAM BD-LG-003-1650**	**505**
BAM02NR	**BAM BD-LG-003-1900**	**505**
BAM02N6	**BAM IA-XA-017-01**	**505**
BAM02N7	**BAM IA-XA-017-02**	**505**
BAM02NC	**BAM MB-LG-023-B13-3**	**505**
BAM02NE	**BAM MB-LG-024-0600-1**	**505**
BAM02NF	**BAM MB-LG-024-1000-1**	**505**
BAM02NH	**BAM MB-LG-024-1200-1**	**505**
BAM02NJ	**BAM MB-LG-024-1650-1**	**505**
BAM02NK	**BAM MB-LG-024-1900-1**	**505**
BAM02N2	**BAM MC-LG-036-T01-3**	**505**
BAM02MZ	**BAM MC-LG-037-B07-3**	**505**
BAM02N0	**BAM MC-LG-038-B07-01-3**	**505**
BAM02N1	**BAM MC-LG-038-B07-02-3**	**505**
BAM02N3	**BAM MC-LG-040-B08-3**	**507**
BAM02N5	**BAM MC-LG-041-B07-3-L**	**507**
BAM02N4	**BAM MC-LG-041-B07-3-S**	**507**

BAM02P9	**BAM TO-LG-011-14**	**507**
BAM02PA	**BAM TO-LG-011-30**	**507**
BAM00T0	**BOS 18,0-HW-3**	**512**
BAM00T2	**BOS 18,0-HW-6**	**512**
BAM01YW	**BAM MB-XA-013-Q08-4**	**512**
BAM00T4	**BOS 2-HW-1**	**512**
BAM00T5	**BOS 2-HW-2**	**512**
BAM00T6	**BOS 2-HW-3**	**512**
BAM00U5	**BOS 5-HW-1**	**512**
BAM00U6	**BOS 5-HW-2**	**512**
BAM02HE	**BAM MB-XA-021-B12-4**	**513**
BAM02HF	**BAM MB-XA-022-B12-4**	**513**
BAM02UY	**BAM MB-XO-028-B37-3**	**513**
BAM037F	**BMS AD-M-005-D12/X01**	**513**
BAM037H	**BMS AD-M-005-D12/X02**	**513**
BAM037R	**BMS AD-M-005-D12/X03**	**513**
BAM00PT	**BOS 11-HW-1**	**513**
BAM00RY	**BOS 18,0-HW-1**	**513**
BAM0305	**BMS CS-M-D12-S6K-03**	**514**
BAM00UH	**BOS 6-HW-1**	**514**
BAM02ZE	**BAM MB-XO-032-B16-1-BR2**	**514**
BAM00T7	**BOS 21-AD-1**	**514**
BAM00T9	**BOS 21-HW-1**	**514**
BAM00TA	**BOS 21-HW-2**	**514**
BAM01FK	**BAM MB-XO-006-B05-4**	**514**
BAM01FM	**BAM MB-XO-007-B05-4**	**514**
BAM00U7	**BOS 5-HW-3**	**515**
BAM00UF	**BOS 5-HW-9**	**515**
BAM0227	**BAM MB-XO-014-B10-4-BLS**	**515**
BAM0228	**BAM MB-XO-014-B10-4-RLS**	**515**
BAM0225	**BAM MB-XO-014-B10-4-RRR**	**515**
BAM022A	**BAM MC-XO-030-6K-4**	**515**
BAM0306	**BMS CS-M-D12-FX18-02**	**515**
BAM0304	**BMS CS-M-D12-S6K-01**	**515**
BAM00TK	**BOS 26-HW-1**	**517**
BAM02KL	**BMS CS-M-D12-B64K-12**	**517**
BAM003E	**BMS AD-M-002-D12/D12**	**517**
BAM0038	**BMS AD-M-002-D12/D18**	**517**
BAM00U8	**BOS 5-HW-4**	**517**
BAM00U9	**BOS 5-HW-5**	**517**
BAM00UA	**BOS 5-HW-6**	**517**
BAM027E	**BAM MC-XO-034-23K-4**	**517**
BAM01K6	**BMF 103-HW-100**	**525**
BAM01K7	**BMF 103-HW-102**	**525**
BAM00K9	**BMF 103-HW-42**	**525**
BAM00KA	**BMF 103-HW-43**	**525**
BAM00KN	**BMF 103-HW-85**	**525**
BAM01K9	**BMF 303-HW-101**	**525**
BAM00KZ	**BMF 303-HW-28**	**525**
BAM00L0	**BMF 303-HW-30**	**525**
BAM00L1	**BMF 303-HW-31**	**525**
BAM00L2	**BMF 303-HW-33**	**525**
BAM00L4	**BMF 303-HW-40**	**525**
BAM00L6	**BMF 303-HW-51**	**525**
BAM00L7	**BMF 303-HW-59**	**525**
BAM00L8	**BMF 303-HW-60**	**525**
BAM00LE	**BMF 303-HW-69**	**525**
BAM00LF	**BMF 303-HW-80**	**525**
BAM01F0	**BMF 303-HW-97**	**527**
BAM01K8	**BMF 305-HW-106**	**527**
BAM00LJ	**BMF 305-HW-20**	**527**
BAM00LP	**BMF 305-HW-24**	**527**
BAM00LT	**BMF 305-HW-26**	**527**
BAM00LU	**BMF 305-HW-27**	**527**
BAM00LW	**BMF 305-HW-32**	**527**
BAM01C4	**BMF 305-HW-92**	**527**
BAM01EZ	**BMF 305-HW-98**	**527**
BAM01EY	**BMF 305-HW-99**	**527**
BAM01M9	**BMF 235-HW-109**	**527**
BAM01MA	**BMF 235-HW-110**	**527**
BAM01MC	**BMF 235-HW-111**	**527**
BAM01Y9	**BMF 307-HW-112**	**527**
BAM00KR	**BMF 10E-HW-19**	**527**
BAM010W	**BTL6-A-MF01-A-43**	**533**
BAM010Y	**BTL6-A-MF01-A-50**	**533**
BAM0110	**BTL6-A-MF03-K-50**	**533**
BAM01N3	**BTL6-A-MF07-A-PF/M5**	**533**
BAM009K	**BES 08-DM-1**	**537**
BAM01WF	**BAM MC-XA-021-M5-4**	**537**
BAM01WR	**BAM MC-XA-021-M8-3**	**537**
BAM033A	**BAM MC-XA-021-M8-4-01**	**537**
BAM01W3	**BAM MC-XA-021-M12-2**	**537**
BAM01WH	**BAM MC-XA-021-M12-4**	**537**
BAM01W6	**BAM MC-XA-021-M16-2**	**537**
BAM01W4	**BAM MC-XA-021-M18-2**	**537**
BAM01WJ	**BAM MC-XA-021-M18-4**	**537**
BAM01WL	**BAM MC-XA-021-M18-A**	**537**
BAM01W5	**BAM MC-XA-021-M30-2**	**537**
BAM01WK	**BAM MC-XA-021-M30-4**	**537**
BAM01WM	**BAM MC-XA-021-M30-A**	**537**
BAE00E5	**BAE PD-US-004-S04**	**543**
BAE00E6	**BAE PD-US-004-S92**	**543**
BAE00MR	**BAE PD-US-007-S92**	**543**
BAM000E	**BFO CT**	**543**
BAM02RY	**BAM TO-XA-013-01**	**543**
BAM00ZN	**BAM TO-CC-001-A3-1,5/24,0**	**543**
BAM00ZL	**BAM TO-CC-001-M3-0,4/8,0**	**543**
BAM033L	**BAM TO-CC-001-M4-0,6/12,0/18,0**	**543**
BAM0291	**BAM TO-XA-009-A-0,7-2,0**	**543**
BAM014M	**BTL5-P-3800-2**	**547**
BAM014P	**BTL5-P-4500-1**	**547**
BAM014T	**BTL5-P-5500-2**	**547**
BAM014W	**BTL6-A-3800-2**	**547**
BAM014Z	**BTL6-A-3801-2**	**547**
BAM014H	**BTL5-F-2814-1S**	**547**
BAM014K	**BTL5-M-2814-1S**	**547**
BAM014L	**BTL5-N-2814-1S**	**547**
BAM01FC	**BTL5-T-2814-1S**	**547**
BAM01A2	**BTL-S-3112-4Z**	**551**
BAM01KA	**BTL-S-3112-4Z-SA10**	**551**
BAM024J	**BTL2-S-3212-4Z**	**551**
BAM0146	**BTL2-S-4414-4Z**	**551**
BAM0149	**BTL2-S-5113-4K**	**551**
BAM014C	**BTL2-S-6216-8P**	**551**
BAM0147	**BTL2-S-4414-4Z-EX**	**551**
BAM0148	**BTL2-S-4414-4Z01-EX**	**551**
BAM014A	**BTL2-S-5113-4K-EX**	**551**
BAM014E	**BTL2-S-6216-8P-EX**	**551**
BAM013H	**BTL-P-0814-GR-PAF**	**551**
BAM013J	**BTL-P-1012-4R**	**551**
BAM013K	**BTL-P-1012-4R-PA**	**553**
BAM013L	**BTL-P-1013-4R**	**553**
BAM013M	**BTL-P-1013-4R-PA**	**553**
BAM013P	**BTL-P-1013-4S**	**553**
BAM013R	**BTL-P-1014-2R**	**553**
BAM013Y	**BTL-P-1028-15R**	**553**
BAM032U	**BAM IA-MS-030-A5**	**557**
BAM01JT	**BAM IA-XA-003-4X5-Y**	**557**
BAM032W	**BAM IA-XA-023-01**	**557**
BAE00EF	**BTL7-A-CB02-K**	**557**
BAE00E1	**BTL7-A-CB02-S115**	**557**
BAE00EC	**BTL7-A-CB02-S32**	**557**
BAM01HJ	**BAM AP-US-002-M18-O**	**557**
BAM0270	**BAM TG-ID-016-A01**	**557**
BAM0271	**BAM TG-ID-016-H01**	**557**
BAM0272	**BAM TG-ID-016-H02**	**557**

BAE00AM	**BAE LX-VS-DR090**	**563**
BAE00KR	**BAE LX-VS-HI050**	**565**
BAE00FR	**BAE LX-VS-HI100**	**565**
BAE00KP	**BAE LX-VS-HI150**	**565**
BAE00JE	**BAE LX-VS-HI200**	**565**
BAE00WM	**BAE LX-VS-HI300**	**565**
BAE000E	**BAE LX-VS-HR025**	**565**
BAE000F	**BAE LX-VS-HR050**	**567**
BAE000H	**BAE LX-VS-HR100**	**567**
BAE00JF	**BAE LX-VS-HR100-E**	**567**
BAE00C5	**BAE LX-VS-HR150**	**567**
BAE00JC	**BAE LX-VS-HR200**	**567**
BAE00MU	**BAE LX-VS-HR300**	**567**
BAE000K	**BAE LX-VS-RI100**	**573**
BAE000J	**BAE LX-VS-RR100**	**573**
BAE00AN	**BAE LX-VS-RW100**	**573**
BAE00NU	**BAE LX-VS-LI100-S26**	**577**
BAE00NZ	**BAE LX-VS-LI200-S26**	**577**
BAE00NT	**BAE LX-VS-LR100-S26**	**577**
BAE00NY	**BAE LX-VS-LR200-S26**	**577**
BAE00NW	**BAE LX-VS-LW100-S26**	**577**
BAE00P0	**BAE LX-VS-LW200-S26**	**577**
BAE00JA	**BAE LX-VS-OR100**	**581**
BAE00J9	**BAE LX-VS-OR50**	**581**
BAE00H1	**BAE LX-VS-SI018**	**585**
BAE011K	**BAE LX-VS-SI030A**	**585**
BAE00KF	**BAE LX-VS-SR012**	**585**
BAE00H0	**BAE LX-VS-SR018**	**585**
BAE011L	**BAE LX-VS-SR030A**	**585**
BAE011M	**BAE LX-VS-SW030A**	**585**
BAE010A	**BAE LX-XO-PL018-E-C1-S103**	**589**
BAE0104	**BAE LX-XO-PL018-E-L1-S103**	**589**
BAE0106	**BAE LX-XO-PL018-E-L3-S103**	**589**
BAE0107	**BAE LX-XO-PL018-E-L7-S103**	**589**
BAE0108	**BAE LX-XO-PL018-E-L8-S103**	**589**
BAE0109	**BAE LX-XO-PL018-E-P1-S103**	**589**
BAE00W8	**BAE LX-XA-BW0170-S4**	**593**
BAE011E	**BAE LX-XA-BW0170A-S4**	**593**
BAE00W9	**BAE LX-XA-BW0278-S4**	**593**
BAE00WA	**BAE LX-XA-BW0332-S4**	**593**
BAE00ZM	**BAE LX-XA-BW0380A-S4**	**593**
BAE00Y4	**BAE LX-XA-BW0530-S4**	**593**
BAE00ZN	**BAE LX-XA-BW0560A-S4**	**595**
BAE00Y5	**BAE LX-XA-BW0710-S4**	**595**
BAE00ZP	**BAE LX-XA-BW0760A-S4**	**595**
BAE00ZR	**BAE LX-XA-BW0960A-S4**	**595**
BAE00Y6	**BAE LX-XA-BW1016-S4**	**595**
BAE00ZT	**BAE LX-XA-BW1160A-S4**	**595**
BAE0070	**BES 516-615-PS-1-PU-05**	**605**
BNI0073	**BNI USB-901-013-A501**	**607**
BNI00C9	**BNI IOL-717-002-E023**	**609**
BNI00C8	**BNI IOL-725-002-E023**	**609**
BNI00C6	**BNI IOL-730-002-E023**	**609**
BNI00C7	**BNI IOL-740-002-E023**	**609**
BNI00C1	**BNI IOL-760-002-E066**	**609**
BNI0041	**BNI IOL-712-000-K023**	**609**
BNI0042	**BNI IOL-714-000-K023**	**611**
BNI004T	**BNI IOL-716-000-K023**	**611**
BNI004C	**BNI IOL-722-000-K023**	**611**
BNI004E	**BNI IOL-724-000-K023**	**611**
BAE0073	**BES 516-IV 2**	**611**
BAE002E	**BOS S-C01**	**611**
BAE002H	**BOS S-F01**	**613**
BAE002J	**BOS S-F02**	**613**
BAE002K	**BOS S-M01**	**613**
BAE002L	**BOS S-M02**	**613**
BAE002M	**BOS S-T01**	**613**
BAE002N	**BOS S-T02**	**613**
BAE00ZU	**BAE SA-XE-051-XR**	**619**
BAE00ZY	**BAE SA-XE-052-XR**	**619**
BAE00ZW	**BAE SA-XE-053-XR**	**619**

Global Project Management

WE ARE EVERYWHERE FOR YOU

Always where you need us
Wherever you are doing business, we will support you locally. We work closely with machine and systems builders, systems integrators, planning offices and maintenance engineers. Balluff has constructed a global network for you consisting of technical consulting, sales and after-sales services.

Project manuals and approval lists
We provide you with custom tailored product data for smooth running of your projects. You receive project-specific manuals and approval lists. And personal contacts from Balluff are at your side throughout the entire project.

Individual services
If our services need to be even more personalized, we make this possible as well: with individual e-catalogs, application-specific product modifications, integrated software and system solutions and comprehensive logistics concepts.

Questions? Contact us. We are happy to help.

innovating automation

innovating automation

Balluff

WE OPEN UP NEW PERSPECTIVES

Balluff is a leading provider of high-value sensor, identification and image processing solutions including networking technology and software for any automation requirement. Family owned for more than 100 years, Balluff currently employs around 3600 persons in 38 subsidiaries with sales, production and development facilities around the world to ensure your success. Together with our representatives we guarantee the highest quality standards in 68 countries so that you always get the best.

We perform top services for innovative solutions that increase your competitive ability. We deliver a consistent digital focus, manufacturing expertise, and high personal dedication.

We adhere to our motto "Innovating Automation" as pacesetters of automation, refiners and new developers, and technological trailblazers. In open exchange with associations, universities and research institutes as well as in close contact with our customers, we create new industrial sector solutions for automation. As a future-looking company we keep our eye not only on the traditional areas of automation, but also devote ourselves to the development of holistic applications for an increasingly digital and networked world.

We have the future firmly in view in everything we do. With a sophisticated environmental management system, we protect the environment and handle our resources with care. This also creates for you the best prerequisites for sustained action.

You can always rely on us, our products and our adherence to delivery dates and schedule — All in the name of mutually beneficial partnership.

Headquarters
Balluff GmbH
Schurwaldstrasse 9
73765 Neuhausen a. d. F.
Germany
Phone +49 7158 173-0
Fax +49 7158 5010
balluff@balluff.de

www.balluff.com

CONTACT OUR
WORLDWIDE
SUBSIDIARIES

Doc.-No. 942500 EN · E21 · Subject to changes. Replaces A19